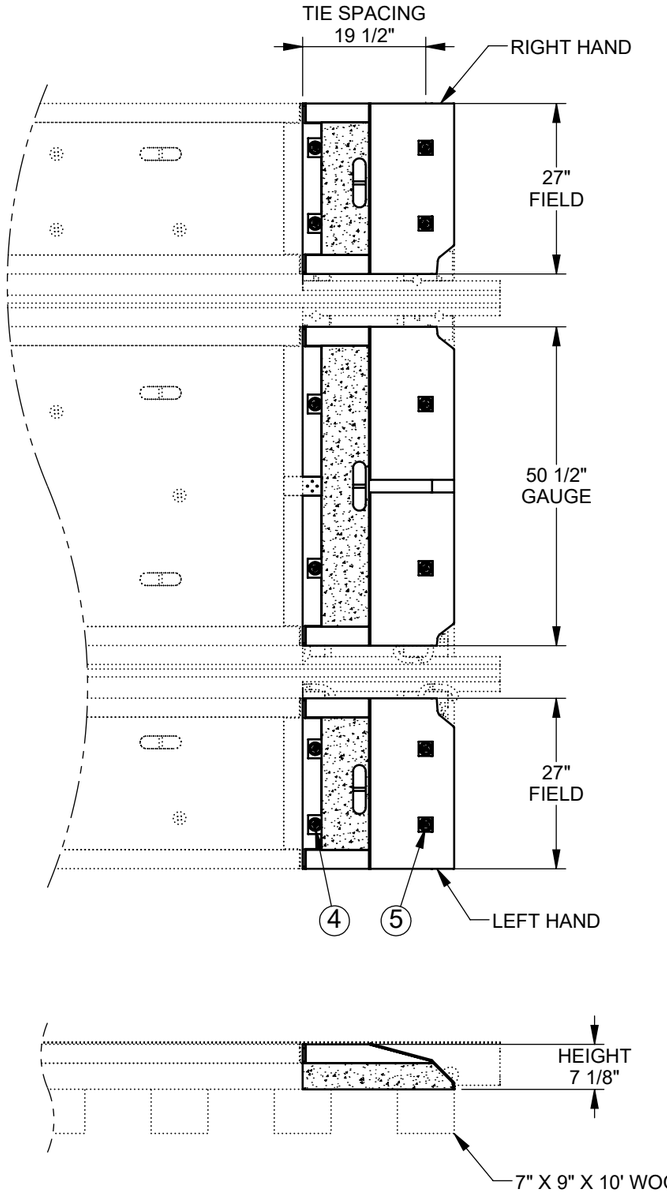

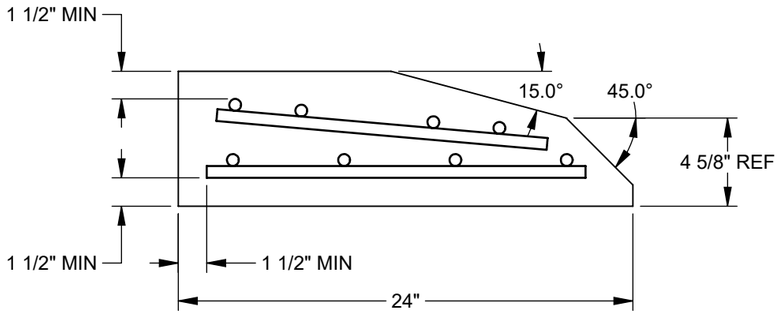

REINFORCEMENT

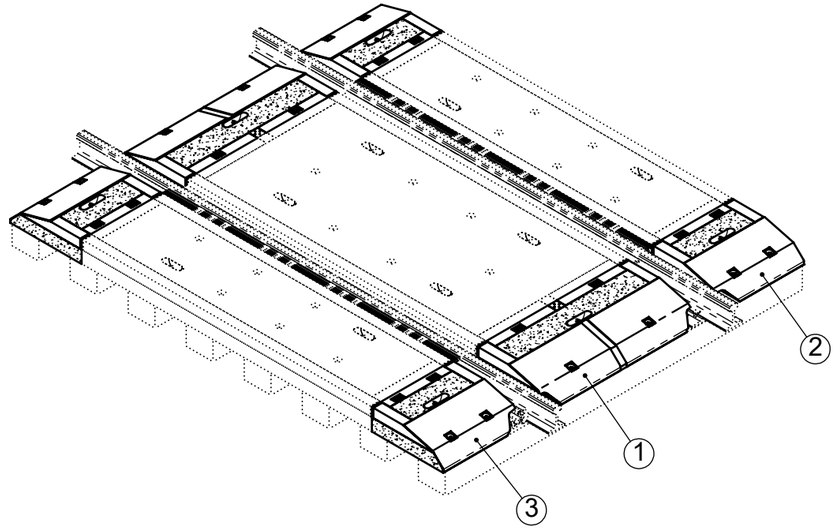

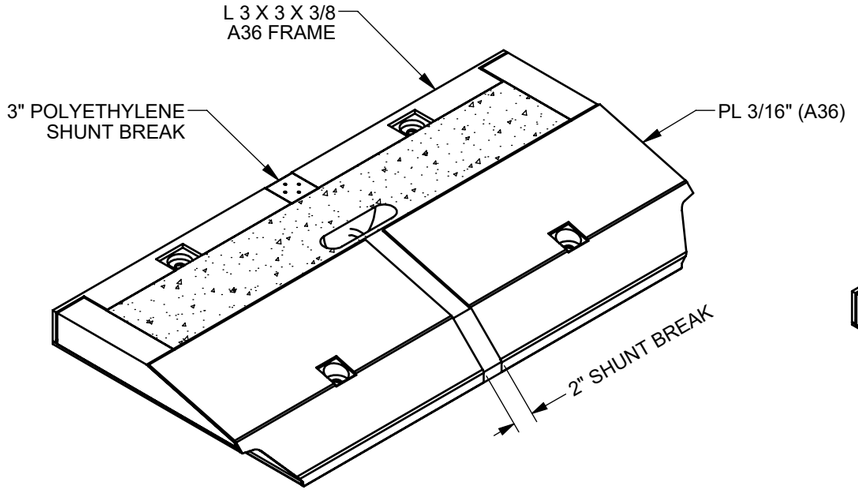

GAUGE END RAMP

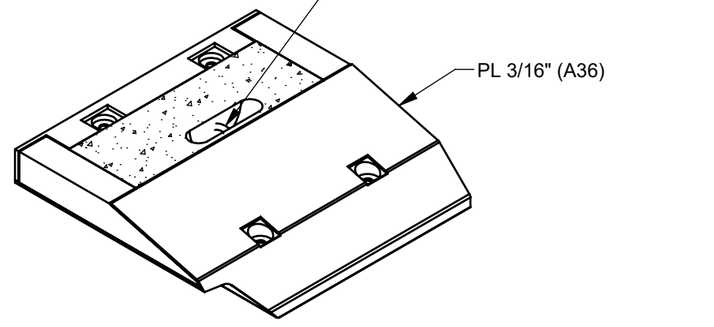

FIELD END RAMP

NOTES:
1. REINFORCEMENT ASTM A706 #5 WELDABLE REBAR.
2. CONCRETE COMPRESSING STRENGTH 6,000 PSI @ 28 DAY.
3. EACH LIFTING DEVICE SAFE WORKING LOAD 4,500 LBS.
4. TOTAL WEIGHT: 2913 LB PER SET (SET INCLUDES 2 GAUGE AND 4 FIELD RAMPS).

ITEM NO.	PART NUMBER	QTY.	DESCRIPTION	Material	Weight
1	1005990-21	2	GAUGE CONCRETE END RAMP, 115#		695
2	1005990-22	2	RH FIELD CONCRETE END RAMP, 115#		370
3	1005990-23	2	LH FIELD CONCRETE END RAMP, 115#		370
4		12	LAG SCREW Ø3/4" X 12"	Alloy Steel	1.1
5		12	LAG SCREW Ø3/4" X 7 1/2"	Alloy Steel	0.7

TOLERANCE: (UNLESS OTHERWISE SPECIFIED)
ALL LINEAR DIMENSIONS ARE ±1/8"
ALL ANGULAR DIMENSIONS ARE ±1 DEG
ALL HOLES ARE +1/16, -0"

REV.	DATE	DESCRIPTION	AUTHOR
00	12/14/2018	RELEASED	GGT

THIS DRAWING AND ALL INFORMATION ON IT IS THE PROPERTY OF OMEGA INDUSTRIES INC. IT IS CONFIDENTIAL AND IS GIVEN YOU FOR A LIMITED PURPOSE AND MUST BE RETURNED ON REQUEST.NEITHER THIS DRAWING NOR ANY PART OF IT NOR ANY INFORMATION CONCERNING IT MAY BE COPIED. EXHIBITED OR FURNISHED TO OTHERS NOR MAY PHOTOGRAPHS BE TAKEN OF ANY ARTICLE FABRICATED OR ASSEMBLED FROM THIS DRAWING WITHOUT CONSENT OF OMEGA INDUSTRIES INC.

OMEGA INDUSTRIES, INC.
7304 N.E. ST. JOHNS RD VANCOUVER, WA 98665

OMEGA INDUSTRIES, INC.
CONCRETE END RAMPS, 115#
FOR USE ON WOOD TIES, 19 1/2" SPACING

ENGINEER

DATE	SCALE	DRAWN BY:
12/13/2018	1:32	GGT

DRAWING NUMBER	SHEET	REVISION
1005990-20	1 OF 1	00

DATE PRINTED: December 14, 2018