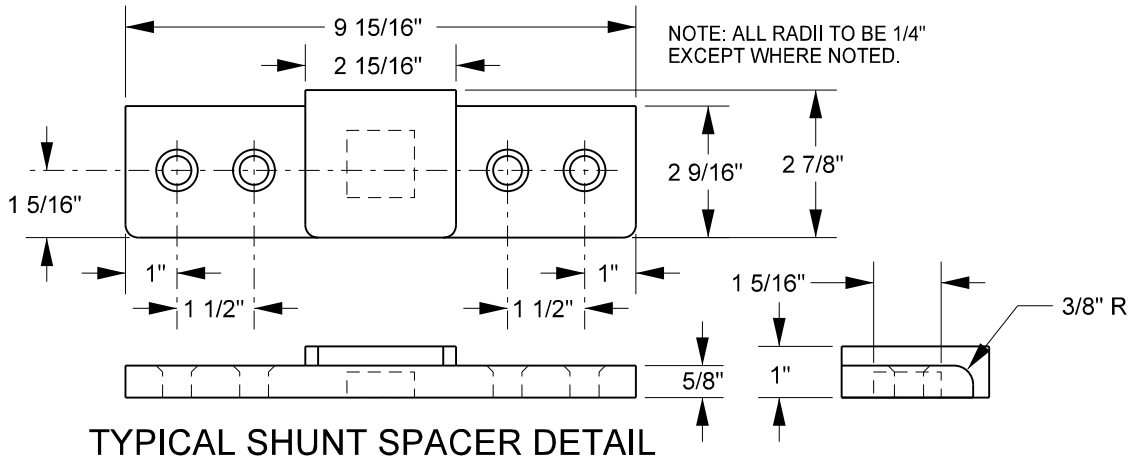

TYPICAL SHUNT SPACER DETAIL
(ALL PANELS)

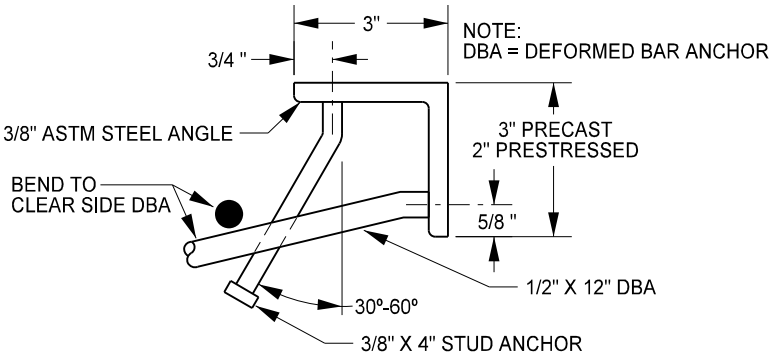

END FRAME DETAIL
(ALL PANELS)

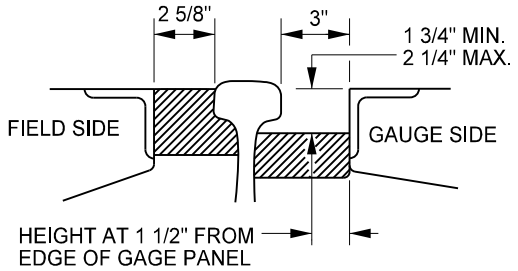

NOTE: VENDOR SHALL SUBMIT PREATTACHED FLANGEWAY FILLER DESIGN AND DETAILS FOR REVIEW AND APPROVAL PRIOR TO FABRICATION.

TYPICAL PREATTACHED FLANGEWAY FILLER
(ALL PANELS)

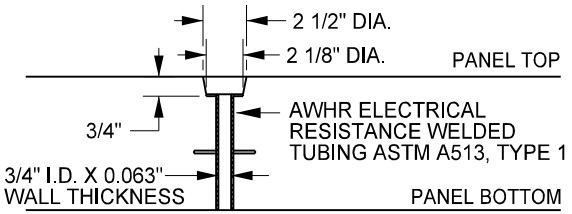

LAG HOLE DETAIL
(9W & 10W)

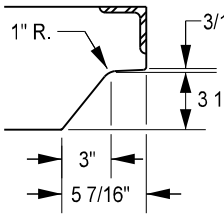

FIELD PANEL
(9W, 10W, & 10C)

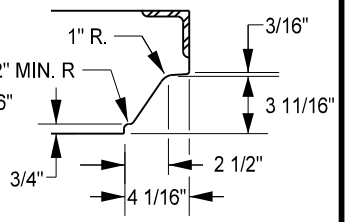

GAUGE PANEL
(9W, 10W, & 10C)

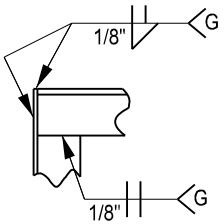

WELD DETAIL
(ALL PANELS)

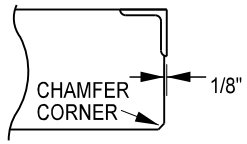

END DETAIL
(ALL PANELS)

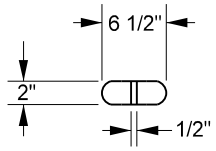

BLOCKOUT DEPTH = 3"

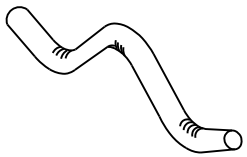

LIFTING INSERTS SHALL BE DESIGNED WITH A MINIMUM SAFETY FACTOR=4. PROFESSIONAL ENGINEER STAMPED AND SEALED DETAILS AND DESIGN CALCULATIONS MUST BE SUBMITTED FOR REVIEW AND APPROVAL PRIOR TO FABRICATION.

LIFTING INSERTS SHALL BE MECHANICALLY GALVANIZED OR SIMILARILY PROTECTED AGAINST CORROSION.

LIFTING DEVICES SHALL BE USABLE WITH BURKE OR DAYTON 5-TON CLUTCH SYSTEMS.

TYPICAL LIFTING DEVICE AND BLOCKOUT
(ALL PANELS)

UNION PACIFIC RAILROAD COMMON STANDARDS

TYPICAL DETAILS FOR CONCRETE PANELS

ADOPTED: SEP. 21, 2020
REVISED:
FILE NO.: 0330

STD DWG
0330

STD DWG 0330

Copyright © 2020 by Union Pacific Railroad