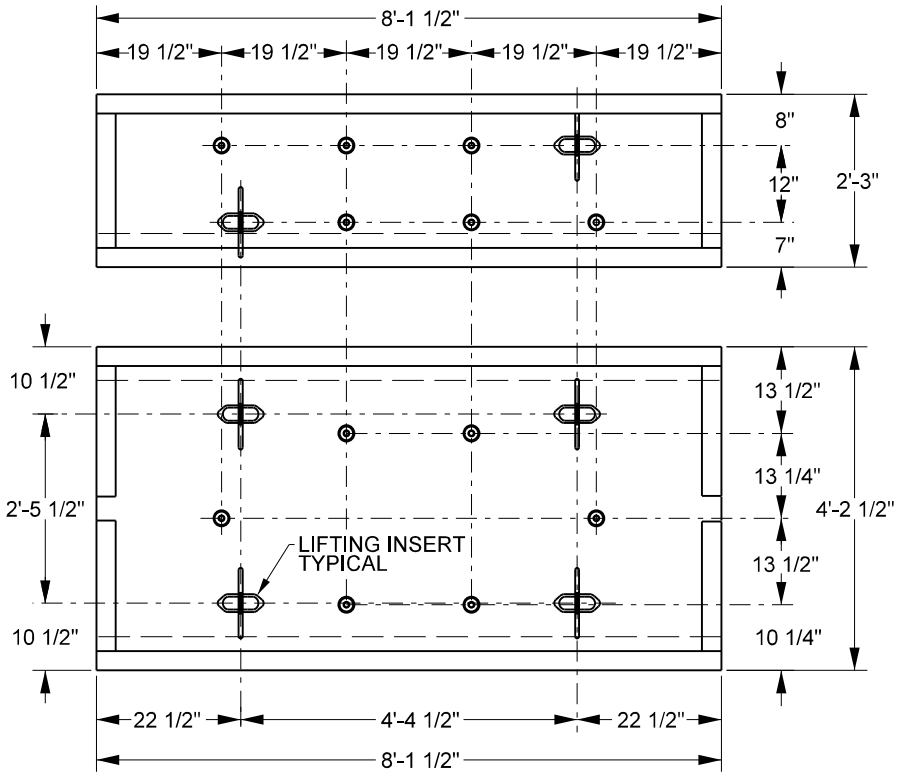

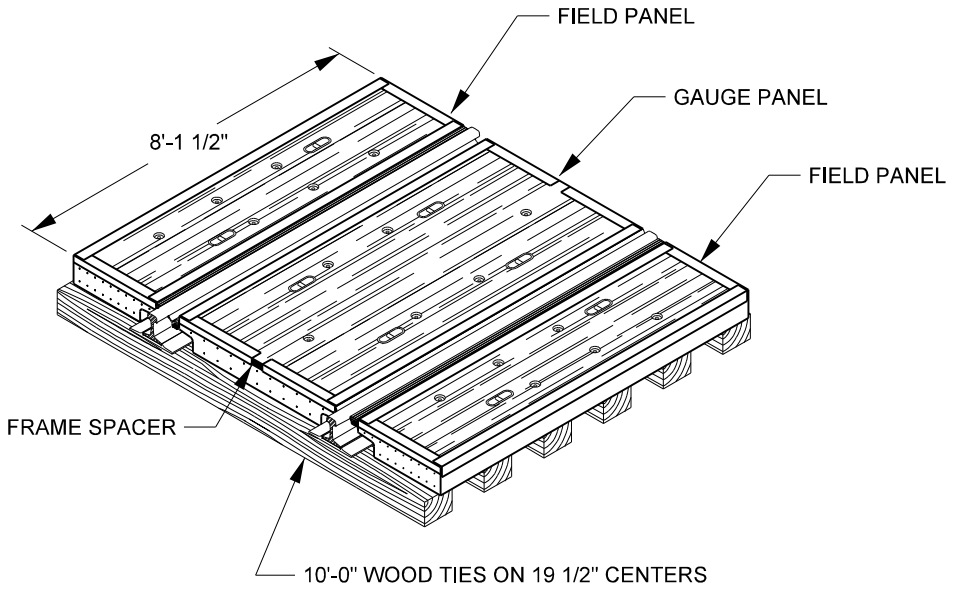

RAIL SIZE	PANEL HEIGHT	GAUGE PANEL WEIGHT	FIELD PANEL WEIGHT
115	7 1/8"	2850 LBS.	1550 LBS.
132-141	7 7/8"	3125 LBS.	1675 LBS.

NOTES:
1/4" RUBBER INTERFACE PAD TO BE PLACED BETWEEN PANEL AND TIES FOR 141 LB. RAIL SECTION. PAD TO BE NAILED TO TIES,

CROSSING TYPE - 10W

UNION PACIFIC RAILROAD COMMON STANDARDS

PRECAST CONCRETE PANELS FOR 10'-0" LONG WOOD TIES (10W)

ITEM NUMBERS	
133-141 LB. UPRR	115 LB. UPRR
540-1301	540-0202

ADOPTED: SEP. 21, 2020
REVISED:
FILE NO.: 0322

STD DWG 0322 PAGE 1 OF 2

STD DWG 0322 PAGE 1 OF 2

Copyright © 2020 by Union Pacific Railroad

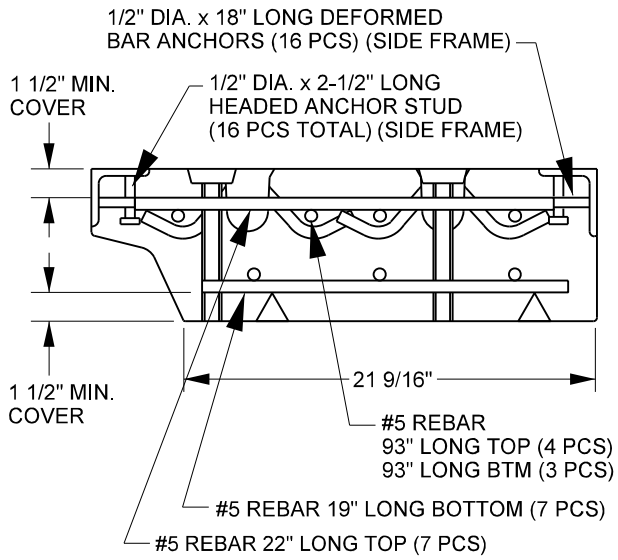

CROSS SECTION - FIELD PANEL

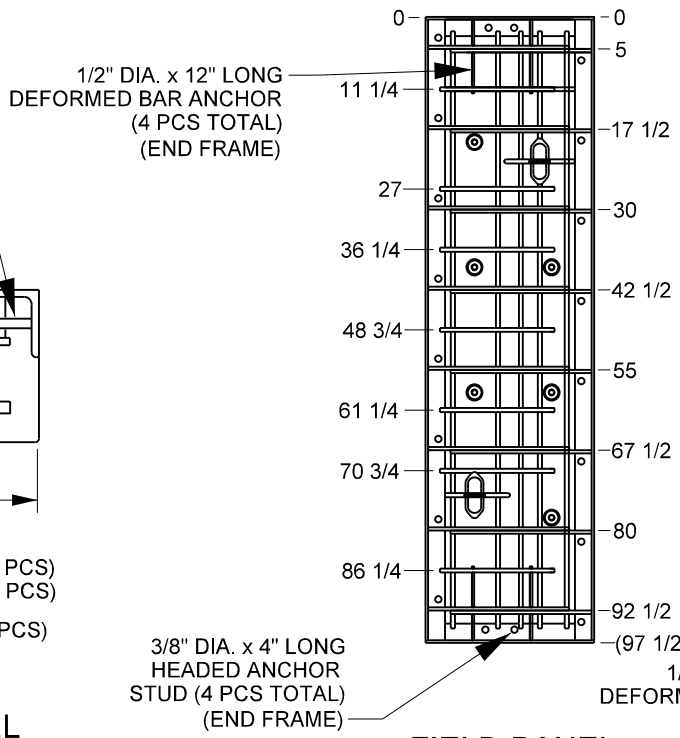

FIELD PANEL

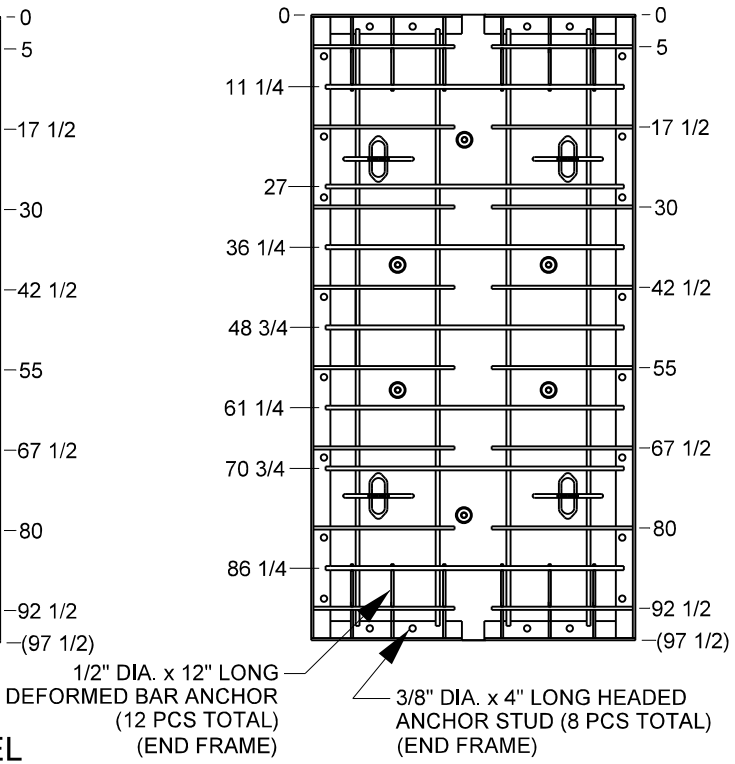

GAUGE PANEL

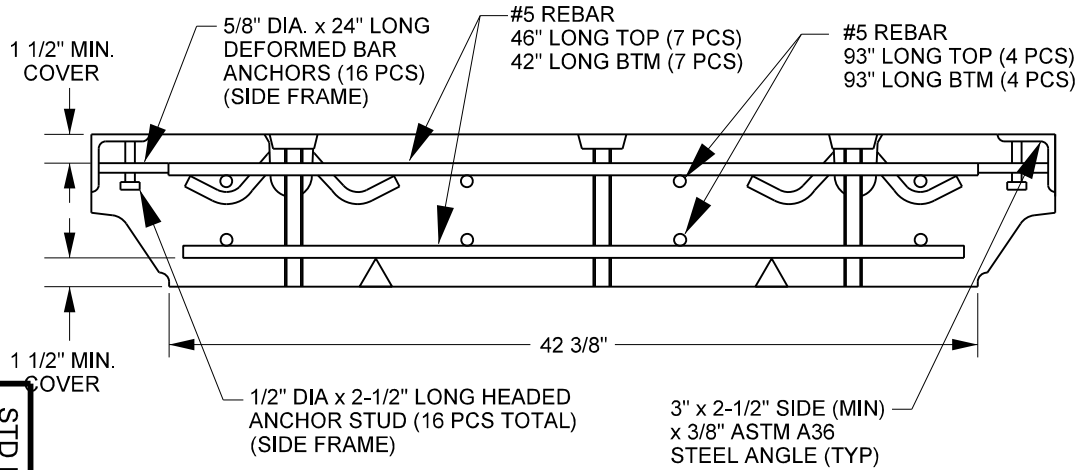

CROSS SECTION - GAUGE PANEL

NOTES:
CONCRETE COMPRESSIVE STRENGTH SHALL BE AS FOLLOWS:
@ 28DAYS = 6000 psi MINIMUM
@ SHIPMENT = 4000 psi MINIMUM
@ REMOVAL FROM FORMS = 2500 psi MINIMUM.

CROSSING TYPE - 10W

UNION PACIFIC RAILROAD COMMON STANDARDS

PRECAST CONCRETE PANELS FOR 10'-0" LONG WOOD TIES (10W)

UNION PACIFIC

ADOPTED: SEP. 21, 2020
REVISED:
FILE NO.: 0322

STD DWG
0322
PAGE 2 OF 2

STD DWG
0322
PAGE 2 OF 2

Copyright © 2020 by Union Pacific Railroad