INVITATION TO BID 26-42-316459

Concrete Crossing Panels

NOVEMBER 23, 2026

ALASKA RAILROAD CORPORATION
327 WEST SHIP CREEK AVENUE
ANCHORAGE, ALASKA 99501

ALASKA RAILROAD CORPORATION
327 W. Ship Creek Ave.
Anchorage, AK 99501
Wallaces@akrr.com
Phone 907.265.2425
Cell 907.744.0031

November 23, 2026

INVITATION TO BID 26-42-316459
CONCRETE CROSSING PANELS

Response Requested,

This form must be completed and returned to insure receipt of future addenda or additional information. Email to: wallaces@akrr.com
All addenda will be forwarded to the contact's name and number listed below.

Firms that have not returned this cover sheet will not be informed of addendums and will only be alerted to addendums by checking with the ARRC procurement officer or by checking ARRC's internet site: www.akrr.com, select Suppliers and then Solicitations. Bidders must acknowledge receipt of all issued addendums in their proposal/bid submittal.

Company _____

Address _____

_____

Contact _____

Phone _____

Email Address _____

Website: www.alaskarailroad.com

ALASKA RAILROAD CORPORATION
327 W. Ship Creek Avenue
Anchorage, Alaska 99501
Wallaces@akrr.com
Phone 907.265.2425
Cell 907.744.0031

November 23, 2026

INVITATION TO BID
26-42-316459
Concrete Crossing Panels

THIS IS NOT AN ORDER

DATE ITB ISSUED: November 23, 2026

SEALED BIDS WILL BE RECEIVED AT:

Alaska Railroad Corporation
Supply Management Department
c/o Sarah Wallace/Bid Number 26-42-316459
327 West Ship Creek Ave.
Anchorage, Alaska 99501

BIDS WILL BE RECEIVED UNTIL 3:00 PM AKST, Thursday, December 15, 2026, AT THAT TIME BIDS WILL BE PUBLICLY OPENED.

The Alaska Railroad Corporation ("ARRC") is soliciting bids from interested parties to provide concrete crossing panels as needed for a three-year contract with option to extend two additional years on a per year basis. Contract shall not exceed five years. Interested parties are invited to submit a bid to provide said services to ARRC. Bids must be submitted on the bid forms contained herein and must be mailed or delivered to the above address. Bids received via email will be considered non-responsive. The bid shall be in a sealed envelope with the bid number 26-42-316459 clearly printed on the face of the envelope. Bids must be complete and in U.S. dollars. See instructions and conditions enclosed herein.

Return your bid in a sealed envelope, the envelope used in submitting your offer shall be plainly marked with the following information:

1. Offeror's name
2. Solicitation Number
3. Date and time scheduled for Receipt of Offers
4. Sealed offer: 26-42-316459 Concrete Crossing Panels

Your bid must be complete. See instructions and conditions enclosed.

ARRC shall not be held responsible for bidder's lack of understanding of what is required by this bid. Should a bidder not understand any aspect of this bid, or require further explanation, or clarification regarding the intent or requirements of this bid, it shall be the responsibility of the bidder to seek guidance from the ARRC.

ARRC reserves the right to reject any and all bids, or any part thereof, negotiate changes in bids, accept any bids or any part thereof, waive minor informalities or defects in any bids, and not to award the proposed contract if it is in the best interest of the ARRC.

ARRC may award a contract resulting from this solicitation to the responsive offeror whose offer conforming to this solicitation will be the most advantageous to the ARRC. ARRC may reject any or all offers if such action is in the best interest of ARRC and waives informalities and minor irregularities in offers received. Any resulting contract from this solicitation shall incorporate the Standard Instructions, and General Terms and Conditions for Construction incorporated in this solicitation.

This solicitation is not to be construed as a commitment of any kind, nor does it commit the ARRC to pay for any costs incurred in the submission of an offer or for any other cost incurred prior to the execution of a formal contract

BIDDER/VENDOR TERMS AND CONDITIONS: PROSPECTIVE BIDDERS ARE CAUTIONED TO PAY PARTICULAR ATTENTION TO THIS CLAUSE. Bidder/contractor-imposed terms and conditions which conflict with this Invitation for Bid terms and conditions are considered counteroffers and, as such, will cause the Alaska Railroad Corporation to consider the bid non-responsive. If a bidder attaches additional terms and conditions as part of the bid, such attachments must be accompanied by a disclaimer stating that in the event of conflict between the terms and conditions of this Invitation for Bid and the terms and conditions of the bidder/contractor, the terms and conditions of the Invitation for Bid will prevail.

ARRC Disadvantaged Business Enterprise (DBE) Program: ARRC is an equal opportunity corporation that encourages the participation of DBEs as prime contractors and subcontractors on its contracts funded in whole or in part by agencies within the U.S. Department of Transportation (USDOT), including the Federal Transit Administration (FTA), the Federal Railroad Administration (FRA), and the Federal Highway Administration (FHWA). ARRC has a race-neutral DBE Program and does not set DBE goals on individual solicitations. Nonetheless, ARRC aspires to achieve an overall DBE participation of 4.0% in federal fiscal years 2025-2027 on USDOT-funded contracts. If this contract is funded whole or in part by funds from the USDOT, it is imperative that you consult the Federal Terms and Conditions portion of this solicitation.

Green Star recognizes organizations that demonstrate an ongoing commitment to reducing waste, preventing pollution, and conserving energy. The railroad has repeatedly recertified the Green Star Award and earned an additional Green Star Air Quality Award in 2007. In 2011, Green Star Inc. presented the Alaska Railroad with its premier new "Super Nova Award" recognizing a higher level of leadership and commitment to doing business in an environmentally responsible manner. ARRC continues to pursue programs and initiatives that promote environmental stewardship.

Please direct all responses and/or questions concerning this invitation to bid **in writing** to Sarah Wallace, Alaska Railroad Corporation, Supply Management, 327 W. Ship Creek Avenue, Anchorage, AK 99501, telephone number 907-265-2425, email address wallaces@akrr.com.

Sincerely,

Sarah B. Wallace
Contract Administrator Specialist
Alaska Railroad Corporation

SOLICITATION CONTENTS

SECTION A:	REQUIRED DOCUMENTS
SECTION B:	STANDARD INSTRUCTIONS
SECTION C:	SPECIFICATIONS
SECTION D:	SUPPLY BID FORM
SECTION E:	CONTRACTOR RESPONSIBILITY QUESTIONNAIRE
SECTION F:	GENERAL TERMS AND CONDITION
SECTION G:	FEDERAL TERMS AND CONDITION
SECTION H:	COST SCHEDULE

ATTACHMENTS:

I. STD DWG 0308 General Manufacturing Specifications for Road Crossings with Concrete Panels.
II. STD DWG 0322 Precast Concrete Panels for 10’-0’ Long Wood Ties.
III. STD DWG 0330 Typical Details for Concrete Panels
IV. OMEGA Industries, Inc. Concrete End Ramps, 115# for Use on Wood Ties, 19 1/2" SPACING

SECTION A
REQUIRED DOCUMENTS

Bids must be submitted in the spaces provided on the Cost Schedule of this invitation in accordance with the conditions of bid as stated herein. The bid will not be considered to be complete unless all spaces have been filled in. Consideration for award will be provided to complete bids only. If a bidder wishes to supply additional information, it may be included along with the bid in the sealed bid envelope.

Bidder/contractor-imposed terms and conditions which conflict with the terms and conditions of this Invitation to Bid are considered counteroffers and, as such, will cause the Alaska Railroad Corporation to consider the bid non-responsive. If a bidder attaches additional terms and conditions as part of the bid, such attachments must be accompanied by a disclaimer stating that in the event of conflict between the terms and conditions of this Invitation to Bid and the terms and conditions of the bidder/contractor, the terms and conditions of the Invitation to Bid will prevail.

Bids will not be considered responsive if the following documents are not completely filled out and submitted at the time of the bidding:

1. Supply Bid Form [Form 395-0132]
2. Cost Schedule
3. Bidder's Questionnaire - [Form 395-0136]

   Federal requirements:

   25. Certification Regarding Use of Contract Funds for Lobbying
   34. Buy America Build America

REQUIRED FOR AWARD In order to be awarded the contract, the successful bidder must completely fill out and submit the following documents within the time specified in the intent to award letter:

1. Contract - [Form 395-0134] - (Supply Only)

SECTION B

STANDARD INSTRUCTIONS

Any contract resulting from this Invitation to Bid shall incorporate the following terms and conditions contained in this bid package.

Addenda: The ARRC procurement officer will attempt to notify all who are known to have received the solicitation documents if any amendments are issued, but it shall be the bidder/offerors responsibility to ascertain prior to submitting a bid/proposal that he/she has received all addenda issued.

Aggrieved Bidder/Offeror: An aggrieved bidder/offeror may protest an ARRC procurement action by filing a written protest with the procurement officer in accordance with the procedures and time limits specified in ARRC Procurement Rules 1800.1-1800.11.

Alaska Railroad, Corporation Rights in Regard to Bid: The Alaska Railroad Corporation reserves the right to reject any or all bids, to waive any informality in bids, to accept in whole or in part such bid or bids as may be deemed in the best interest of the ARRC.

Assignment: The agreement to be established as a result of this solicitation shall not be assigned by the contractor in whole or in part without the express written consent of the Alaska Railroad Corporation, nor shall the contractor have the right to authorize or permit the use of the Alaska Railroad Corporation's equipment or service facilities by third parties without the express written consent of the Alaska Railroad Corporation.

Availability of Funds: ARRC's obligation under any contract is contingent upon the availability of funds to pay for contract purchases. No legal liability on the part of ARRC may arise until funds are made available for a contract and until the Contractor receives written notice of such availability from the procurement officer. Signature by an authorized ARRC representative on the contract award document constitutes written notice of availability of funds.

Bidder's Terms and Conditions: Prospective bidders are cautioned to pay particular attention to this clause. Bidder/contractor-imposed terms and conditions which conflict with this Invitation to Bid terms and conditions are considered counteroffers and, as such, will cause the Alaska Railroad Corporation to consider the bid non-responsive.
If a bidder attaches additional terms and conditions as part of the bid, such attachments must be accompanied by a disclaimer stating that in the event of conflict between the terms and conditions of this Invitation to Bid and the terms and conditions of the bidder/contractor, the terms and conditions of the Invitation to Bid will prevail.

Compliance: Seller warrants that all services, equipment, work and other items supplied by Seller pursuant to this Agreement and any subsequent releases will comply with all applicable Federal, State and Municipal laws, ordinances and regulations including the Fair Labor Standards Act. Further, Seller warrants that all services, equipment and materials furnished by Seller in the performance of this Agreement will comply fully with the Occupational Safety and Health Act of 1970 (84 U. S. Stat. 1590) and all amendments thereto and regulations thereunder to the extent applicable. Seller shall indemnify Purchaser from and against all claims, loss or liability arising from failure of such services, equipment, work and materials to comply therewith. ARRC reserves the right to determine if the materials meet the specifications intended. **Note:** Each bidder shall

indicate compliance or exception to each specification item individually in the bid response.
Delivery Date: Your bid should indicate the earliest firm delivery date after receipt of award. ARRC shall fully expect the successful contractor to completely satisfy contract performance requirements in accordance with firm delivery dates offered in the Cost Schedule.

F.O.B. Point: All prices quoted shall be **F.O.B. Seattle, WA** freight prepaid and allowed with no markup.

Governing law: This contract shall be governed by all applicable Federal, State and Municipal laws. All concerning actions shall be brought in the Superior Court of the State of Alaska.

Hold Harmless: The contractor shall indemnify the Alaska Railroad Corporation against liability and hold it harmless from loss in respect to any and all claims and demands whatsoever rising out of the performance of this agreement, save and except the contractor shall not be liable for acts of negligence of Alaska Railroad Corporation employees acting within the scope of their employment. The Alaska Railroad Corporation shall not be liable for any costs incurred by the bidder in bid preparation.

Incurred Costs: The issuance of a solicitation does not obligate ARRC to pay for any bid/proposal preparation costs incurred by bidders/offerors and does not obligate ARRC to award a contract for supplies/services. All costs incurred as a result of solicitation or contract negotiations resulting from a solicitation, including travel and personal expenses, are the sole responsibility of the bidder/offeror.

Method of Bidding: Bids must be submitted in the spaces provided on the bid sheets of this invitation in accordance with the conditions of bid as stated herein. The bid will not be considered to be complete unless all spaces have been filled in. Consideration for award will be provided to complete bids only. If a bidder wishes to supply additional information, it may be included along with the bid in the sealed bid envelope.

Mill of Manufacture Certification: ARRC requires a mill certification indicating that inspections have been performed and that the product is in conformance with the specifications. VENDOR WILL BE REQUIRED TO PROVIDE MILL TEST. A copy of the mill certificate must accompany the invoice. All concrete panels and end ramps which pass the inspection will be clearly marked and identified as ARRC ties; unmarked ties will not be accepted. **MUST BE AAR CERTIFIED** Please send a copy of your quality assurance program certificate**.**

Packing Slips: All shipments under this agreement shall be accompanied by delivery tickets or sales slips, which shall contain; **a)** the complete Purchase Order/Contract Number, and **b)** the description of the material, quantities, and the respective costs.

Performance Assurances: Before final award of any contract as a result of this Invitation to Bid, awarded vendor will be required to make adequate assurance of performance in the form of verifiable information to the contract officer. Failure to make adequate assurance shall by signature of this bid render the vendor's bid non-responsive to this Invitation.

Prices: Prices will be firm for duration contract after bid opening date. ARRC shall receive the benefit of any general reduction in bidder's/offerors price prior to the delivery of supplies or services and in no event shall ARRC be charged higher prices than bidder's/offerors similar customers who purchase substantially similar supplies or services under substantially similar circumstances. All prices bid shall be exclusive of any federal, state, or local taxes from which

ARRC is exempt.

Price Escalation: Price escalation may be considered only during a renewal option period and must be requested in writing at least sixty (60) days in advance. Any increase is subject to Contract Officer approval and must be supported by historical cost data demonstrating that the Contractor's gross profit percentage remains consistent with its original offer.

Public Information: All submitted bids/proposals will be considered confidential until notice of intent to award is issued. After notice of intent to award is issued, all bids/proposals will become public information.

Substitutions: No substitutions and/or alternate products which exceed the specification parameters established in Section C, Specifications, shall be considered for award.

Term: Initial term of this contract will be three years. Upon mutual agreement, terms may be added up to two additional one-year terms. Total duration of any contract resulting from this solicitation shall not exceed five years.

Terms and Conditions: Any resulting contract from this Invitation to Bid shall incorporate the attached general terms and conditions contained in this bid package. The bidder shall list any variations from or exceptions to the Terms, Conditions or Specifications of the Solicitation on an attached page.

Warranty: Contractor shall warrant all equipment offered to be free of defects in materials and workmanship. In the event of defects in materials and workmanship, Contractor's liability obligations shall be to repair or replace defective parts.

SECTION C
SPECIFICATIONS

The items to be purchased through this bid are critical to the operation of the ARRC. Any vendor who responds to this bid must meet the following minimum qualifications in order to be considered responsive:

A. Be the original manufacturer or be a distributor / dealer authorized by the manufacturer that routinely maintains an inventory of the requested product as part of its normal business and is authorized by the original manufacturer to serve the State of Alaska.

B. Be able to provide audited financial statements demonstrating the financial ability to meet the requirements of any order that may result from this solicitation.

ARRC may conduct an inspection of the supplier's facility to include its offices and inventory of the items being solicited prior to contract award. All bids submitted in response to this Invitation to Bid must be signed by an individual with the legal authority to submit the offer on behalf of the company. Bids received from manufacturers/suppliers that do not meet these qualifications will not be considered.

UP Common Standards or Approved Equal, Crossing Panels Specifications:

1. A set consists of one (1) Gauge Panel and two (2) Field Panels.

2. A complete set of Concrete End Ramps consist of one (1) Gauge End Ramp Panel, one (1) Right Hand Field End Ramp Panel, and one (1) Left Hand Field End Ramp Panel.

3. 8.125' Panel Length is for 10' Wood Ties spaced 19.5" on center.

4. The manufacturer shall be ISO 9000 or AAR M-1003 certified. All testing personnel shall be a minimum of ACI Level I certified.

5. The fabricator shall be responsible for loading and properly securing all precast concrete members for shipment.

6. The manufacturer shall warranty product for a minimum of ten years against defects in materials and workmanship.

7. The manufacturer shall permanently mark each panel with a concrete imprint for size of rail, weight of panel, manufacturer's ID, month/day/year of manufacture, and crossing type. End of each panel to be stenciled painted with size of rail, weight of panel, and crossing type.

8. Standard details shall be provided prior to intent to award for review by the Alaska Railroad Corporation, Engineering Department. Upon award the successful bidder

shall provide the Alaska Railroad Corporation with Drawings in AutoCAD. Details required are as follows:

A. General Layout with Cross Section for 10' Wood Ties at 19.5" O.C.
B. Detail shall show Flangeway Filler for both Field and Gauge Panels.
C. Plan of Gauge Panel Frame Looking Up and Cross Section.
D. Plan of Field Panel Frame Looking Up and Cross Section.
E. Plan of Gauge Panel Prior to Casting.
F. Plan of Field Panel Prior to Casting.
G. Gauge Panel Shunt Gap Prototype.
H. Tolerances for Standard Tangent and Curved Panels.
I. Panel ID Plate and Panel Placement with Details.
J. Clip Lag Hole Insert for Gauge and Field Panels.
K. Detail of Flangeway Filler.
L. Detail of Field and Gauge End Ramp drawings.
M. Detail of Utility Anchor and Weight Tensions required for Safe Working Load.
N. The manufactures recommended installation procedures.

Material Specifications:

1. Structural steel shall conform to ASTM A36 specifications. Welding to be per AWS code.

2. All exposed steel to receive one coat primer.

3. End angles for each Gauge Panel should have 3" gap minimum to improve shunt resistance. Reinforcing material and cladding to be constructed to meet shunting requirement. A non-conductive spacer to be attached to gauge frame.

4. Cladding on ends of panels should extend beyond concrete 0.125" (+0.125', -0") to improve match with adjacent panels.

5. Reinforcing steel shall conform to current ASTM A615 specification, Grade 60. If any welding of reinforcement steel is required, material shall conform to ASTM A706 specification, Grade 60.

6. Concrete compressive strength shall be as follows:

   A. Compressive strength = 4000 PSI per min. prior to release of pretension.
   B. Compressive strength = 6500 PSI 28 days.
   C. Maximum water/cement ratio = 0.44 (by weight)
   D. Cement to be no more than 0.60% Total Alkali Equivalent.
   E. Slump not to exceed 3 inches
   F. Air entrainment = 6 % + or – 1.0% in plastic concrete.

7. Concrete material mixing, placing and curing to be in accordance with PCI “Manual for Quality Control: Precast and Prestressed Concrete.” Manual 115, Edition 4. Cement shall have no more than 0.6% total alkali content. Maximum water/cement ratio = 0.44 (by weight). Air entrainment = 6% +/- 1% in plastic concrete. Slump 3” maximum.

8. Copies of the concrete design mix to be submitted to ARRC for approval prior to the start of the casting operation.

9. Top surface shall be non-crack design and is to be sealed to prevent ion migration due to salting.

10. Curling shall follow the recommendations and procedures of PCI in 4th Edition Division 4.

11. 0.1875” Weep/inspection holes shall be placed every 2 feet minimum along the top of the steel frame along a line 0.75” from outside edge.

12. Flangeway filler to be permanently pre-attached and have the following properties:

    A. A sample section of the flangeway material shall be physically tested by applying a lateral force of 10 lb/in at 50 degrees Celsius. The maximum lateral displacement of the test is not to exceed 0.25” (crossing type 10C only). Test results must be submitted for railroad approval.
    B. Manufacturer to design the pre-attached flangeway filler to allow for removal of panels for maintenance without damaging the flangeway filler or any other components designed to hold it together.

13. 0.25” Rubber interface pad to be placed between panel and ties for 141 lb rail section. Pad to be nailed to ties.

<u>Tolerances:</u>

1. Out of square 0.1875” (measured along the diagonal).

2. Length, width, and thickness: +/- 0.125”.

3. The bottom surface, which will be in contact with the ties, shall not undulate in any direction more than 0.09375”.

4. Reinforcement placement shall be +/- 0.75” horizontal, +/- 0.125” vertical.

<u>Finish:</u>

1. All recesses and minor concrete spalls are to be filled and finished to the panel dimensions using the proper bonding agent and repair material surface of the repaired area is to match the color and texture of the surrounding areas.

2. The driving surface is to have a light broom finish or as approved by railroads. The addition of water to the concrete surface finish during

casting is not permitted.

Special Testing:

1. Twice annually, vendors shall submit (via an independent testing laboratory to ARRC) the following test on the approved mixed design;

   A. ASTM C666 Freeze/Thaw

   B. ASTM C227 Mortal Bar Method

   C. ASTM C1260 at total alkali burden = 0.06%

2. Gauge Panels shall be designed with shunt resistant features in order to provide a minimum electrical resistance in accordance with the standard electrical test (DWG 500930).

3. A representative sample of panels shall be checked periodically for bottom flatness by using a straight edge calibrated to within +/- 0.03125" and a taper gauge as follows: 8 positions of flatbar (---) check flatness at each position using taper gauge.

Term/Period of Performance: Purchase Order Contract will be in effect for three (3) years with the Alaska Railroad Corporation's option to renew the contract for two additional one-year terms. Total contract duration is not to exceed five (5) years.

Approved Manufactures/Standard Plan: Vendors may submit a proposed concrete crossing panel and/or ramp assembly as a 'proposed equal'; however, no substitution shall be permitted unless the Alaska Railroad Corporation (ARRC) reviews the submission and issues prior written approval confirming the product meets or exceeds the performance, dimensional, material, and durability requirements of UP's General Manufacturing Specifications, Standard Drawing 322, End Ramp 1005990-20 Omega 115#, and Standard Drawing 3. All proposed equals must include complete technical documentation, testing data, installation requirements, and manufacturer certifications. ARRC reserves the sole right to determine equivalency, and any replacement or addition shall be accomplished only upon ARRC's written approval.

Buy America/BABA Requirement: All concrete crossing panels furnished under this solicitation shall comply with FHWA Buy America / Build America, Buy America (BABA) requirements for iron, steel, and manufactured products. Vendors shall provide certification of compliance upon request.

SECTION D
ALASKA RAILROAD CORPORATION SUPPLY BID FORM

NAME _____

ADDRESS _____

_____

To the CONTRACTING OFFICER, ALASKA RAILROAD CORPORATION:

In compliance with your Invitation for Bids No.: **26-42-316459 Concrete Crossing Panels** the Undersigned proposes to furnish and deliver all the supplies, materials or equipment and perform all the work required in said Invitation according to the specifications and requirements contained therein and for the amount and prices named herein as indicated on the Cost Schedule, which is made a part of this Bid.

The Undersigned hereby agrees to execute the said contract and bonds, if any, **within Ten (10) Calendar Days**, or such further time as may be allowed in writing by the Contracting Officer, after receiving notification of the acceptance of this Bid, and it is hereby mutually understood and agreed that in case the Undersigned does not, the accompanying bid guarantee, if any, shall be forfeited to the Alaska Railroad Corporation as liquidated damages, and said Contracting Officer may proceed to award the contract to others.

The Undersigned agrees to commence performance **within Ten (10) Calendar Days** after the effective date of the Notice to Proceed and to complete performance by _____, unless extended in writing by the Contracting Officer.

The Undersigned acknowledges receipt of the following addenda to the requirements and/or specifications for this Invitation for Bids (give number and date of each).

Addendum Number/Dated Addendum Number/Dated Addendum Number/Dated

_____

_____

NON-COLLUSION AFFIDAVIT

The Undersigned declares, under penalty of perjury under the laws of the United States, that neither he/she nor the firm, association, or corporation of which he/she is a member, has, either directly or indirectly, entered into any agreement, participated in any collusion, or otherwise taken any action in restraint of free competitive bidding in connection with this Bid.

The Undersigned has read the foregoing proposal and hereby agrees to the conditions stated therein by affixing his/her signature below:

_____ _____

Name and Title of Person Signing Signature

_____ _____

Telephone Number E-mail Address

SECTION E
CONTRACTOR RESPONSIBILITY QUESTIONNAIRE

Part I - Instructions

1. All Bidders/Proposers submitting a Bid/Proposal for federally funded contracts are to complete and submit all Parts of this Questionnaire with their Bid or Proposal. Failure to complete and return this questionnaire, any false statements, or failure to answer questions when required, may render the bid/proposal non-responsive. All responses must be typewritten or printed in ink. All information must be legible.

2. Please state "not applicable" in questions clearly not applicable to Bidder/Proposer in connection with this solicitation. Do not omit any questions.

3. The completed Questionnaire must be sworn to by a partner (if partnership), a duly authorized officer or individual (if a corporation or LLC), or a principal (if a sole proprietorship).

4. The term "Proposer" includes the term "Bidder" and also refers to the firm awarded the Contract. The term "Proposal" includes the term "Bid".

5. ARRC reserves the right to inquire further with respect to Proposer's responses; and Proposer consents to such further inquiry and agrees to furnish all relevant documents and information as requested by ARRC. Any response to this document prior or subsequent to Proposer's Proposal which is or may be construed as unfavorable to Proposer will not necessarily automatically result in a negative finding on the question of Proposer's responsibility or a decision to terminate the contract if it is awarded to Proposer.

Part II - Identity of Proposer

1. Proposer's Full Legal Name: _____

2. The Proposer represents that it operates as the following form of legal entity:
   (Check whichever applies and fill in any appropriate blanks.)
   - ☐ an individual or sole proprietorship
   - ☐ A General Partnership
   - ☐ a limited partnership
   - ☐ a joint venture consisting of: _____

   and _____

   (List all joint ventures on a separate sheet if this space is inadequate.)
   - ☐ a non-profit organization
   - ☐ a corporation organized or incorporated under the laws of the following state or country:

   _____ on the following date: _____

   - ☐ a limited liability company organized under the laws of the following state or country:

   _____ on the following date: _____

1. Proposer's federal taxpayer identification number: _____

2. Proposer's Alaska business license number: _____

3. Proposer's contractor's license number (for construction only): _____

4. Proposer's legal address: _____

   Telephone Number: (____) _____ Fax Number: (____) _____

5. Proposer's local or authorized point of contract address:

   Name: _____ Title: _____

   Address: _____

   Telephone Number: (____) _____ Fax Number: (____) _____

6. How long has the Proposer been in business? _____

7. Has Proposer been in business under another name? If so, identify name and dates used.

   _____

   _____

8. Does your firm consider itself to be an MBE, WBE or DBE?

   YES ☐ NO ☐

   If answer is "YES," attach a copy of certification.

9. Number of employees: _____ including _____ employees in the State of Alaska.

Part III - Contracting History

1. Has the Proposer been awarded any contracts within the last five years by ARRC, the State of Alaska, or any other public entity for the same or reasonably similar goods or services sought by this solicitation? If none, answer "No". If yes, on a separate sheet of paper describe those contracts beginning with the most recent. State the name of the contracting entity; give a brief description of the contract and the contract number, the dollar amount at award and at completion, date completed; state the contract period, the status of the contract, and the name, address, and telephone number of a contact person at the agency. Indicate if award was made to Proposer as prime contractor or joint venture. Proposer need not provide more than three such descriptions.

YES ☐ NO ☐

2. Has the Proposer been awarded any private sector contracts within the last five years for the same or reasonably similar goods or services sought by this solicitation? If none, answer "No." If yes, on a separate sheet of paper provide the name and address of the contracting entity, a brief description of work, the dollar amount at award and at completion, date completed, status of the contract and name, address and telephone number of contact person as to each, beginning with the most recent. Indicate if Proposer acted as prime contractor or joint venture. Proposers need not provide more than three such descriptions.

YES ☐ NO ☐

Note: Any "YES" answer to #3 below must be fully explained on a separate sheet of paper and attached to this questionnaire.

3. In the past five years has the Proposer been the subject of any of the following actions?

A. Been suspended, debarred, disqualified, or otherwise declared ineligible to bid?

YES ☐ NO ☐

B. Failed to complete a contract for a public or private entity?

YES ☐ NO ☐

C. Been denied a low-bid contract in spite of being the low bidder?

YES ☐ NO ☐

D. Had a contract terminated for any reason, including default?

YES ☐ NO ☐

E. Had liquidated damages assessed against it during or after completion of a contract?

YES ☐ NO ☐

F. Been a defaulter, as principal, surety or otherwise?

YES ☐ NO ☐

G. Been denied an award of a public contract based upon a finding by a public agency that your company was not a responsible contractor?

YES ☐ NO ☐

H. A public entity requested or required enforcement of any of its rights under a surety agreement on the basis of your company's default or in lieu of declaring your company in default?

YES ☐ NO ☐

I. Been denied a performance or payment bond by a surety company?

YES ☐ NO ☐

J. Been required to pay back wages and/or penalties for failure to comply with state or federal prevailing wage or overtime laws?

YES ☐ NO ☐

4. Does Proposer currently possess the financial, organizational, technical, equipment, facilities, and other resources necessary to supply the goods or services sought by this solicitation? If no, on a separate sheet of paper describe how you intend to obtain the resources necessary to supply the goods or services sought by this solicitation.

YES ☐ NO ☐

5. Does Proposer have any present or anticipated commitments and/or contractual obligations that might impact its ability to meet the required delivery or performance requirements of this solicitation? If yes, on a separate sheet of paper describe any apparent conflicts as between the requirements/commitments for this solicitation with respect to the use of Proposer's resources, such as management, technical expertise, financing, facilities, equipment, etc.

YES ☐ NO ☐

Part IV - Civil Action

If "Yes" to Parts IV or V, provide details on a separate sheet of paper including a brief summary of cause(s) of action; indicate if Proposer, its principals, officers or partners were plaintiffs or defendants; define charges explicitly, by what authority, court or jurisdiction, etc. In the case of tax liens, please indicate whether the liens were resolved with the tax authorities. Please submit proof of payment or agreements to pay the liens. Complete details are required.

1. Violations of Civil Law. In the past five years has Proposer, any of its principals, officers or partners been the subject of an investigation of any alleged violation of a civil antitrust law, or other federal, state or local civil law?

YES ☐ NO ☐

2. Lawsuits with Public Agencies. At the present time is, or during the past five years has Proposer, any of its principals, officers or partners been a plaintiff or defendant in any lawsuit or arbitration regarding services or goods provided to a public agency?

YES ☐ NO ☐

3. Bankruptcy. During the past five years, has the Proposer filed for bankruptcy or reorganization under the bankruptcy laws?

YES ☐ NO ☐

4. Judgments, Liens and Claims. During the past five years, has the Proposer been the subject of a judgment, lien or claim of $25,000 or more by a subcontractor or supplier?

YES ☐ NO ☐

5. Tax Liens. During the past five years, has the Proposer been the subject of a tax lien by federal, state or any other tax authority?

YES ☐ NO ☐

Part V - Compliance with Laws and Other Regulations

1. Criminal: In the past five years has the Proposer, any of its principals, officers, or partners been convicted or currently charged with any of the following:

A. Fraud in connection with obtaining, attempting to obtain, or performing a public contract, agreement or transaction?

YES ☐ NO ☐

B. Federal or state antitrust statutes, including price fixing collusion and bid rigging?

YES ☐ NO ☐

C. Embezzlement, theft, forgery, bribery, making false statements, submitting false information, receiving stolen property, or making false claims to any public agency?

YES ☐ NO ☐

D. Misrepresenting minority or disadvantaged business entity status with regard to itself or one of its subcontractors?

YES ☐ NO ☐

E. Non-compliance with the prevailing wage requirements of the State of Alaska or similar laws of any other state?

YES ☐ NO ☐

F. Violation of any law, regulation or agreement relating to a conflict of interest with respect to a government funded procurement?

YES ☐ NO ☐

G. Falsification, concealment, withholding and/or destruction of records relating to a public agreement or transaction?

YES ☐ NO ☐

H. Violation of a statutory or regulatory provision or requirement applicable to a public or private agreement or transaction?

YES ☐ NO ☐

I. Do any principals, officers or partners in Proposer's company have any felony charges pending against them that were filed either before, during, or after their employment with the Proposer?

YES ☐ NO ☐

2. Regulatory Compliance. In the past five years, has Proposer or any of its principals, officers or partners:

A. Been cited for a violation of any labor law or regulation, including, but not limited to, child labor violations, failure to pay correct wages, failure to pay into a trust account, failure to remit or pay withheld taxes to tax authorities or unemployment insurance tax delinquencies?

YES ☐ NO ☐

B. Been cited and assessed penalties for an OSHA or Alaska/OSHA "serious violation"?

YES ☐ NO ☐

C. Been cited for a violation of federal, state or local environmental laws or regulations?

YES ☐ NO ☐

D. Failed to comply with Alaska corporate registration, federal, state or local licensing requirements?

YES ☐ NO ☐

E. Had its corporate status, business entity's license or any professional certification, suspended, revoked, or had otherwise been prohibited from doing business in the State of Alaska?

YES ☐ NO ☐

Part VI – Financial

Copies of the following documents are to be submitted with this Questionnaire:

1. Proposer's current Alaska Business License, if required by state law.
2. Proposer's Financial Statements may be requested:

A. PUBLICLY TRADED COMPANIES: Financial information will be accessed online. However, if additional information is needed, it will be specifically requested from the Proposer.

B. NON-PUBLICLY TRADED COMPANIES WITH AUDITED OR REVIEWED FINANCIAL STATEMENTS: Statements, including balance sheet, statement of earnings and retained income, with footnotes, for the most recent three years **may be requested.**

NOTE: ARRC reserves the right to ask for additional documentation if it is reasonably required to make a determination of integrity and responsibility relevant to the goods or services the Proposer will provide to ARRC if awarded a contract. All financial information provided is considered confidential and not subject to public disclosure under Alaska law.

[PART VII ON THE FOLLOWING PAGE]

Part VII - Verification and Acknowledgment

The undersigned recognizes that the information submitted in the questionnaire herein is for the express purpose of inducing ARRC to award a contract, or to allow Proposer to participate in ARRC projects as contractor, subcontractor, vendor, supplier, or consultant. The undersigned has read and understands the instructions for completing this Questionnaire.

STATE OF _____

COUNTY OF _____

I, (printed name) _____, being first duly sworn, state that I am the (title) _____ of Proposer. I certify that I have read and understood the questions contained in the attached Questionnaire, and that to the best of my knowledge and belief all information contained herein and submitted concurrently or in supplemental documents with this Questionnaire is complete, current, and true. I further acknowledge that any false, deceptive or fraudulent statements on the Questionnaire will result in denial or termination of a contract.

I authorize ARRC to contact any entity named herein, or any other internal or outside resource, for the purpose of verifying information provided in the Questionnaire or to develop other information deemed relevant by ARRC.

_____ _____

Signature of Certifying Individual Date

Subscribed and sworn to before me this _____ day of _____, 20_____

_____

Signature of Notary

Notary Public in and for the State of _____

My Commission Expires: _____

NOTICE TO PROPOSERS:

A materially false statement, omission or fraudulent inducement made in connection with this Questionnaire is sufficient cause for denial of a contract award or revocation of a prior contract award, thereby precluding the Proposer from doing business with, or performing work for ARRC, either as a vendor, prime contractor, subcontractor, consultant or subconsultant for a period of five years. In addition, such false submission may subject the person and/or entity making the false statement to criminal charges under applicable state and/or federal law.

SECTION F
GENERAL TERMS AND CONDITIONS – SUPPLY CONTRACTS
(Revised 4/17/08)

The following terms and conditions supersede the terms and conditions on the reverse side of ARRC's purchase order to the extent that they are inconsistent therewith and shall be deemed to have the same force and effect as though expressly stated in any such purchase order into which this document is incorporated.

1. Definitions.

"ARRC" shall mean the Alaska Railroad Corporation.

"Vendor" shall mean the person or entity entering into the contract to provide the supplies specified therein for ARRC.

"Contract" shall mean these General Terms and Conditions, the contract form to which they are annexed, and all other terms, conditions, schedules, appendices or other documents attached to the contract form or incorporated by reference therein.

"Supplies" shall mean the equipment, goods, materials or other items to be provided by Vendor to ARRC under the contract.

2. Inspection and Reports. ARRC may inspect all of the Vendor's facilities and activities under this contract in accordance with the provisions of ARRC Procurement Rule 1600.9. The Vendor shall make progress and other reports in the manner and at the times ARRC reasonably requires.

3. Claims. Any claim by Vendor for additional compensation or equitable adjustment arising under this contract which is not disposed of by mutual agreement must be made by Vendor in accordance with the time limits and procedures specified in sections 1800.12 et seq. of ARRC's Procurement Rules, which by this reference are hereby incorporated herein.

4. Nondiscrimination.

4.1 The Vendor may not discriminate against any employee or applicant for employment because of race, religion, color, national origin, ancestry, physical or mental handicap, sex, marital status, change in marital status, pregnancy or parenthood when the reasonable demands of the positions do not require distinction on the basis of age, physical handicap, sex, marital status, changes in marital status, pregnancy, or parenthood. To the extent required by law, the Vendor shall take affirmative action to ensure that the applicants are considered for employment and that employees are treated during employment without unlawful regard to their race, color, religion, national origin, ancestry, physical or mental handicap, age, sex, marital status, changes in marital status, pregnancy or parenthood. This action must include, but need not be limited to, the following: employment, upgrading, demotion, transfer, recruitment or recruitment advertising, layoff or termination, rates of pay or other forms of compensation, and selection for training including apprenticeship. The Vendor shall post in conspicuous places available to employees and applicants for employment, notices setting out the provisions of this paragraph.

4.2 The Vendor shall cooperate fully with ARRC efforts which seek to deal with the problem of unlawful discrimination, and with all other ARRC efforts to guarantee fair employment practices under this contract and promptly comply with all requests and directions from the State Commission for Human Rights or any of its officers or agents relating to prevention of discriminatory employment practices.

4.3 Full cooperation in Paragraph 4.2 includes, but is not limited to, being a witness in any proceeding involving questions of unlawful discrimination if that is requested by any official or agency of the State of Alaska; permitting employees of the Vendor to be witnesses or complainants in any proceeding involving questions of unlawful discrimination, if that is requested by any official or agency of the State of Alaska; participating in meetings; submitting periodic reports on the equal employment aspects of present and future employment; assisting inspection of the Vendor's facilities; and promptly complying with all State directives considered essential by any office or agency of the State of Alaska to insure compliance with all federal and state laws, regulations, and policies pertaining to the prevention of discriminatory employment practices.

4.4 Failure to perform under this section constitutes a material breach of the contract.

5. Cancellation/Termination.

5.1 ARRC may, for its sole convenience, cancel this contract in whole or in part, at any time by giving written notice of its intention to do so. In the event of such cancellation, Vendor shall be entitled to receive payment in accordance with the payment provisions of this contract for supplies delivered to ARRC and, as to work in progress prior to receipt of notice, ARRC shall pay Vendor only for direct expenditures on work specifically identified to this contract. Vendor shall not be paid for any work done after receipt of a notice of cancellation or for any costs incurred by Vendor's suppliers or subcontractors which Vendor could reasonably have avoided. However, in no event shall ARRC be liable for incidental, consequential, or punitive damages, overhead or other direct or indirect costs, or lost profits. Payments made under this contract shall not exceed the aggregate price specified in this contract.

5.2 In addition to ARRC’s right to cancel this contract for its convenience, ARRC may, by written notice of default to Vendor, terminate the contract in whole or in part in the following circumstances:

(1) The Vendor refuses or fails to perform its obligations under the contract, or fails to make progress so as to significantly endanger timely completion or performance of the contract in accordance with its terms, and Vendor does not cure such default within a period of ten (10) days after receipt of written notice of default from ARRC or within such additional cure period as ARRC may authorize; or

(2) Reasonable grounds for insecurity arise with respect to Vendor’s expected performance and Vendor fails to furnish adequate assurance of due performance (including assurance of performance in accordance with the time requirements of the contract) within ten (10) days after receipt of a written request by ARRC for adequate assurance; or

(3) Vendor becomes insolvent or makes an assignment for the benefit of creditors or commits an act of bankruptcy or files or has filed against it a petition in bankruptcy or reorganization proceedings.

5.3 Upon receipt of a notice of cancellation or termination, Vendor shall immediately discontinue all work, and it shall immediately cause any of its suppliers or subcontractors to cease such work unless the notice directs otherwise. In the event of termination for default, Vendor shall be liable for any damage to ARRC resulting from the Vendor's nonperformance. The rights and remedies of ARRC provided in this section shall not be exclusive and are in addition to any other rights and remedies provided by law.

6. No Assignment or Delegation. The Vendor may not assign, subcontract or delegate this contract, or any part of it, or any right to any of the money to be paid under it, except with the prior written consent of ARRC. No such approval shall relieve Vendor from any of its obligations or liabilities under this contract.

7. Independent Contractor. The Vendor's relationship to ARRC in performing this contract is that of an independent contractor and nothing herein shall be construed as creating an employer/employee relationship, partnership, joint venture or other business group or concerted action.

8. Payment of Taxes. As a condition of performance of this contract, the Vendor shall pay all federal, state, and local taxes incurred by the Vendor and shall require their payment by any subcontractor or any other persons in the performance of this contract. Satisfactory performance of this paragraph is a condition precedent to payment by ARRC under this contract.

9. Governing Law. This contract, and all questions concerning the capacity of the parties, execution, validity (or invalidity) and performance of this contract, shall be interpreted, construed and enforced in all respects in accordance with the laws of the State of Alaska.

10. Alaska Executive Branch Ethics Act Requirements. No officer or employee of the State of Alaska or of the ARRC and no director of the ARRC or legislator of the state shall be admitted to any share or part of this contract or to any benefit that may arise therefrom. Vendor shall exercise reasonable care and diligence to prevent any actions or conditions which could be a violation of Alaska Statute 39.52 et seq. Vendor shall not make or receive any payments, gifts, favors, entertainment, trips, secret commissions, or hidden gratuities for the purpose of securing preferential treatment or action from or to any party. This obligation will apply to the activities of Vendor's employees and agents in their relations with ARRC employees, their families, vendors, subcontractors, and third parties arising from this contract and in accomplishing work hereunder. Certain gratuities may be given or accepted if:

(1) there is no violation of any law or generally accepted ethical standards;
(2) the gratuity is given as a courtesy for a courtesy received and does not result in any preferential treatment or action;
(3) the gratuity is of limited value (less than$150) and could not be construed as a bribe, payoff or deal; and
(4) public disclosure would not embarrass ARRC.

ARRC may cancel this contract without penalty or obligation in the event Vendor, or its employees violate the provisions of this section.

11. Covenant Against Contingent Fees. Vendor warrants that it has not employed or retained any company or person, other than a bona fide employee working solely for Vendor,

to solicit or secure this contract, and that it has not paid or agreed to pay any person, company, individual, or firm any commission, gift, percentage, fee, contingent upon or resulting from the award or making of this contract. For the breach or violation of this warranty, ARRC may terminate this contract without liability and, at its discretion, deduct from the contract price or otherwise recover the full amount of the commission, percentage, gift, or fee.

12. Warranty. Vendor warrants that the equipment, goods, materials or other supplies sold to ARRC under this contract: (a) shall be of good quality and free from all defects and deficiencies in workmanship, material and design; (b) shall be fit, suitable and operate successfully for their intended purpose; (c) shall be new; (d) shall be free from all liens, claims, demands, encumbrances and other defects in title; and (e) shall conform to the specifications, if any, stated in the contract. Vendor shall honor all guarantees and warranties offered by the manufacturer of the equipment, goods, materials or other supplies provided under this contract.

The rights and remedies provided for in this section are in addition to any other remedies provided by law.

13. Indemnification. The Vendor shall indemnify, save harmless and defend ARRC, its officers, agents and employees from all liability of any nature or kind, including costs and expenses, for all actions or claims resulting from injuries or damages sustained by any person or property arising directly or indirectly as a result of any error, omission, product defect, negligent or wrongful acts of the Vendor, its subcontractors or anyone directly or indirectly employed by them in the performance of this contract, provided that Vendor's aforesaid indemnity and hold harmless agreement shall not be applicable to any liability based upon the sole negligence of ARRC.

14. ARRC's Rights Not Waived by Payment. No payment made by ARRC shall be considered as acceptance of satisfactory performance of Vendor's obligations under this contract. Nor shall any payment be construed as acceptance of substandard or defective work or as relieving Vendor from its full responsibility under the contract.

15. Nonwaiver. A party's failure or delay to insist upon strict performance of any of the provisions of this contract, to exercise any rights or remedies provided by this contract or by law, or to notify the other party of any breach of or default under this contract shall not release or relieve the breaching or defaulting party from any of its obligations or warranties under this contract and shall not be deemed a waiver of any right to insist upon strict performance of this contract or any of the rights or remedies as to any subject matter contained herein; nor shall any purported oral modification or rescission of this contract operate as a waiver of any of the provisions of this contract. The rights and remedies set forth in any provision of this Agreement are in addition to any other rights or remedies afforded the nonbreaching or non-defaulting party by any other provisions of this contract, or by law.

16. Savings Clause. If any one or more of the provisions contained in thee contract shall, for any reason, be held to be invalid, illegal or unenforceable in any respect, such invalidity, illegality or unenforceability shall not affect any other provisions of this contract, but this contract shall be construed as if such invalid, illegal or unenforceable provision had never been contained herein.

17. Headings. The headings of sections and paragraphs of this contract are for convenience of reference only and are not intended to restrict, affect, or be of any weight in the interpretation or construction of the provisions of such sections or paragraphs.

18. Forum Selection. The parties shall not commence or prosecute any suit, proceeding or claim to enforce the provisions of the contract, to recover damages for breach or default under the contract, or otherwise arising under or by reason of the contract, other than in the courts of the State of Alaska for the Third Judicial District at Anchorage. The parties hereby irrevocably consent to the jurisdiction of said courts.

19. Conflict of Interest. Vendor shall act to prevent any actions or conditions which could result in a conflict with ARRC's best interests. This obligation shall apply to the activities of Vendor's employees and agents in their relationships with ARRC's employees, their families, vendors, subcontractors and third parties accomplishing work under this contract.

20. Publicity. Vendor shall not release any information for publication or advertising purposes related to this contract or to the material, equipment and other supplies furnished under this contract without the prior written consent of the ARRC.

21. Audit. ARRC has the right to audit at reasonable times the accounts and books of the Vendor in accordance with the provisions of ARRC Procurement Rule 1600.10.

22. Internal Controls and Record Keeping. Vendor shall keep full and accurate records and accounts of all of its activities in connection with this contract, including, without limitation, reasonable substantiation of all expenses incurred and all property acquired hereunder.

23. Force Majeure. Neither ARRC nor Vendor shall be responsible for failure to perform the terms of this contract when performance is prevented by force majeure, provided that: (1) notice and reasonably detailed particulars are given to the other party and (2) the cause of such failure or omission is remedied so far as possible with reasonable dispatch. The term “force majeure” shall mean acts of God, earthquakes, fire, flood, war, civil disturbances, governmentally imposed rules, regulations or other causes whatsoever, whether similar or dissimilar to the causes herein enumerated, which is not within the reasonable control of either party and which through the exercise of due diligence, a party is unable to foresee or overcome. In no event shall force majeure include normal or reasonably foreseeable or reasonably avoidable operational delays.

24. Set Off. If ARRC has any claim against Vendor related or unrelated to this contract, it may set off the amount of such claim against any amount due or becoming due under this contract.

25. Observance of Rules. The Vendor’s personnel performing work hereunder on ARRC’s premises shall observe all fire prevention, security, and safety rules in force at the site of the work.

26. No Third-Party Beneficiary Rights. No provision of this contract shall in any way inure to the benefit of any third parties (including the public at large) so as to constitute any such person a third- party beneficiary of the contract or of any one or more of the terms hereof or otherwise give rise to any cause of action in any person not a party hereto.

27. Entire Agreement. This contract represents the entire and integrated agreement between ARRC and the Vendor and supersedes all prior negotiations, representations, or agreements, either written or oral. This contract may be amended only by a written instrument signed by both ARRC and the Vendor.

28. Invalid Provision. The invalidity or unenforceability of any provision of this contract shall not affect the other provisions hereof, and this contract shall be construed in all respects as if such invalid or enforceable provisions were omitted.

29. Packing, Marking and Shipping. All supplies shall be properly packaged to prevent damage or deterioration and to obtain the lowest transportation rates. ARRC will pay no charge for preparation, crating, dunnage or other materials unless separately stated in this contract. Each packing slip, bill of lading, invoice, container, tag and correspondence shall bear the applicable contract number and the location to which the supplies are to be shipped. A waterproof Master Packing Slip shall accompany each shipment and shall be included in one of the packages marked "Packing Slip Inside" or in the case of a carload shipment, be conspicuously displayed on the inside of the freight car. The original Bill of Lading shall be mailed to the attention of ARRC Supply Management Department on date of shipment.

30. Improper Delivery. If for any reason the Contractor fails to make timely delivery, ARRC may, at its option, approve a revised delivery schedule, request shipment via air or expedited routing (at Contractor's expense) or terminate this contract without any liability. Contractor will not, however, be liable for damages resulting from delays in delivery due to causes beyond Contractor's reasonable control, provided Contractor promptly notifies ARRC in writing of any such delay or expected delay as soon as such delay or expected delay becomes or should have become apparent. The remedies provided in this paragraph shall be cumulative and in addition to any other or further remedies ARRC may have.

31. Shipping Release. The Contractor shall not ship any of the supplies covered by this contract, unless specific delivery dates or written instructions are furnished to Contractor by ARRC. ARRC shall have no responsibility for supplies for which delivery dates or other written instructions have not been provided. Shipments in excess of those authorized may be returned to Contractor and Contractor shall pay ARRC for all expenses incurred in connection with such shipments. ARRC may change or temporarily suspend shipping schedules specified in this contract or written instructions.

32. Inspection/Rejection. Notwithstanding prior shipment, all supplies are subject to inspection and acceptance by ARRC within a reasonable time after they arrive at destination. ARRC shall notify Contractor if any supplies are rejected for any reason or if there are shortages. At ARRC's election, rejected supplies may be held for Contractor's account or returned to Contractor at Contractor's risk and expense. No replacement or correction of defective or nonconforming supplies shall be made by Contractor without written authorization from ARRC. Contractor shall promptly ship any shortages after notification of the same by ARRC.

33. Compliance with Laws and Regulations. Contractor agrees that in the performance of this contract it will comply with the requirements of all applicable Federal, State and local statutes, regulations and orders and will indemnify and save ARRC harmless from any claim, loss or damage arising from Contractor's violation or alleged violation of them.

34. Reduction in Contractor's Cost. Any reduction in Contractor's costs resulting from a reduction in freight rates, custom duties, import taxes, excise taxes and/or sales taxes from those in force on the date of the contract is to be paid to ARRC by Contractor in reduction of the price of the ordered supplies.

35. Payments. Payments for supplies furnished under this contract will be due thirty (30) days after the later of (1) receipt of the supplies established in the contract, (2) receipt of proper billing for such supplies, and (3) receipt of all documents required by this contract. ARRC shall not be liable for interest charges on late payments.

SECTION G
REQUIRED CONTRACT PROVISIONS
FOR
FEDERAL-AID CONTRACTS
[Revised April 2, 2026]

The following contract provisions shall apply, where applicable, to all work performed on the contract by the contractor's own organization and by subcontractors. As provided in this Section, the contractor shall insert in each subcontract all of the stipulations contained in these Required Contract Provisions and further require their inclusion in any lower tier subcontracts or purchase orders that may in turn be made. Incorporation by reference shall not be allowed. The prime contractor shall be responsible for compliance by any subcontractor or lower tier subcontractor with all applicable Required Contract Provisions.

1. CARGO PREFERENCE REQUIREMENTS – 46 USC 55305; 46 CFR 381.7 [Applicable to all Federal-aid contracts involving equipment, materials or commodities that may be transported by ocean vessel]

Cargo Preference-Use of United States Flag Vessels - The contractor agrees: **a**. to use privately owned United States-Flag commercial vessels to ship at least 50 percent of the gross tonnage (computed separately for dry bulk carriers, dry cargo liners, and tankers) involved, whenever shipping any equipment, material, or commodities pursuant to the underlying contract to the extent such vessels are available at fair and reasonable rates for United States-Flag commercial vessels; **b**. to furnish within twenty (20) working days following the date of loading for shipments originating within the United States or within thirty (30) working days following the date of loading for shipments originating outside the United States, a legible copy of a rated, "on-board" commercial ocean bill-of-lading in English for each shipment of cargo described in 46 CFR 381.7(a)(1) to the Division of National Cargo, Office of Market Development, Maritime Administration, 1200 New Jersey Avenue, SE, Washington, D.C. 20590 and to ARRC (through the contractor in the case of a subcontractor's bill-of-lading), marked with appropriate identification of the project; **c**. to include these requirements in all subcontracts issued pursuant to this contract when the subcontract may involve the transport of equipment, material, or commodities by ocean vessel.

2. DEBARMENT, SUSPENSION, INELIGIBILITY & VOLUNTARY EXCLUSION – 2 CFR 180.220 & Part 1200; 2 CFR 200.213 and Appendix II (H); Executive Orders 12549 & 12689 [Applicable to all Federal-aid contracts which exceed $25,000]

The Contractor shall comply and facilitate compliance with U.S. DOT regulations, "Non-procurement Suspension and Debarment," 2 CFR Part 1200, which adopts and supplements the U.S. Office of Management and Budget (U.S. OMB) "Guidelines to Agencies on Government-Wide Debarment and Suspension (Non-procurement)," 2 CFR Part 180. As such, the Contractor shall verify that its principals, affiliates, and subcontractors are eligible to participate in this federally funded contract and are not presently declared by any Federal department or agency to be:

a) Debarred from participation in any federally assisted Award;
b) Suspended from participation in any federally assisted Award;
c) Proposed for debarment from participation in any federally assisted Award;
d) Declared ineligible to participate in any federally assisted Award;
e) Voluntarily excluded from participation in any federally assisted Award; or
f) Disqualified from participation in any federally assisted Award.

By signing this contract and/or submitting its bid or proposal, the Contractor, bidder or proposer certifies as follows:

The certification in this clause is a material representation of fact relied upon by the ARRC. If it is later determined by the ARRC that the Contractor, bidder or proposer knowingly rendered an erroneous certification, in addition to remedies available to the ARRC, the Federal Government may pursue available remedies, including but not limited to suspension and/or debarment. The Contractor, bidder or proposer agrees to comply with the requirements of 2 CFR Part 180, subpart C, as supplemented by 2 CFR Part 1200, while its offer is valid and throughout the period of any contract that may arise from its offer. The contractor, bidder or proposer further agrees to include a provision requiring such compliance in its lower tier covered transactions.

3. DAVIS-BACON AND COPELAND ANTI-KICKBACK ACTS – 40 USC 3141-3148; 49 USC 5333(a); 29 CFR Part 5; 2 CFR Part 200, App. II (D) [Applicable to all Federal-aid construction contracts which exceed $2,000]

(1) Minimum wages - (i) All laborers and mechanics employed or working upon the site of the work (or otherwise working in construction or development of the project under a development statute), will be paid unconditionally and not less often than once a week, and without subsequent deduction or rebate on any account (except such payroll deductions as are permitted by regulations issued by the Secretary of Labor under the Copeland Act (29 CFR Part 3)), the full amount of basic hourly wages and bona fide fringe benefits (or cash equivalents thereof) due at time of payment computed at rates not less than those contained in the wage determination of the Secretary of Labor which is attached hereto and made a part hereof, regardless of any contractual relationship which may be alleged to exist between the contractor and such laborers and mechanics. As provided at 49 CFR 5.5(d) and (e), the appropriate wage determinations are effective by operation of law even if they have not been attached to the contract.

Contributions made or costs reasonably anticipated for bona fide fringe benefits under the Davis-Bacon Act at 40 USC 3141(2)(B) on behalf of laborers or mechanics are considered wages paid to such laborers or mechanics, subject to the provisions of paragraph (1)(iv) of this section; also, regular contributions made or costs incurred for more than a weekly period (but not less often than quarterly) under plans, funds, or programs which cover the particular weekly period, are deemed to be constructively made or incurred during such weekly period. Such laborers and mechanics shall be paid the appropriate wage rate and fringe benefits on the wage determination for the classification(s) of work actually performed, without regard to skill, except as provided in 29 CFR 5.5(a)(4). Laborers or mechanics performing work in more than one classification may be compensated at the rate specified for each classification for the time actually worked therein, provided the employer's payroll records accurately set forth the time spent in each classification in which work is performed. The wage determination (including any additional classifications and wage rates conformed under paragraph (1)(ii) of this section) and the Davis-Bacon poster (WH-1321) shall be posted at all times by the contractor and its subcontractors at the site of the work in a prominent and accessible place where it can be easily seen by the workers.

(ii)(A) The contracting officer shall require that any class of laborers or mechanics, including helpers, which is not listed in the wage determination and which is to be employed under the contract shall be classified in conformance with the wage determination. The contracting officer shall approve an additional classification and wage rate and fringe benefits therefore only when the following criteria have been met:

(1) The work to be performed by the classification requested is not performed by a classification in the wage determination; and

(2) The classification is used in the area by the construction industry; and

(3) The proposed wage rate, including any bona fide fringe benefits, bears a reasonable relationship to the wage rates contained in the wage determination; and

(4) With respect to helpers as defined in 29 CFR 5.2, the duties of the helper are clearly defined and distinct from those of any other classification on the wage determination; the use of such helpers is an established prevailing practice in the area in which the work is performed; and the helper is not employed as a trainee in an informal training program.

(B) The conformance process may not be used to split, subdivide, or otherwise avoid application of classifications listed in the wage determination.

(C) If the contractor and the laborers and mechanics to be employed in the classification (if known), or their representatives, and the contracting officer agree on the classification and wage rate (including the amount designated for fringe benefits where appropriate), a report of the action taken shall be sent by the contracting officer by email to DBAconformance@dol.gov. The Administrator, or an authorized representative, will approve, modify, or disapprove every additional classification action within 30 days of receipt and so advise the contracting officer or will notify the contracting officer within the 30-day period that additional time is necessary.

(D) In the event the contractor, the laborers or mechanics to be employed in the classification or their representatives, and the contracting officer do not agree on the proposed classification and wage rate (including the amount designated for fringe benefits, where appropriate), the contracting officer shall, by

email to DBAconformance@dol.gov, refer the questions, including the views of all interested parties and the recommendation of the contracting officer, to the Administrator for determination. The Administrator, or an authorized representative, will issue a determination within 30 days of receipt and so advise the contracting officer or will notify the contracting officer within the 30-day period that additional time is necessary.

(E) The contracting officer must promptly notify the contractor of the action taken by the Wage and Hour Division under paragraphs (1)(ii)(C) and (D) of this section. The contractor must furnish a written copy of such determination to each affected worker or it must be posted as a part of the wage determination. The wage rate (including fringe benefits where appropriate) determined pursuant to paragraphs (1)(ii) (C) or (D) of this section shall be paid to all workers performing work in the classification under this contract from the first day on which work is performed in the classification.

(iii) Whenever the minimum wage rate prescribed in the contract for a class of laborers or mechanics includes a fringe benefit which is not expressed as an hourly rate, the contractor shall either pay the benefit as stated in the wage determination or shall pay another bona fide fringe benefit or an hourly cash equivalent thereof.

(iv) If the contractor does not make payments to a trustee or other third person, the contractor may consider as part of the wages of any laborer or mechanic the amount of any costs reasonably anticipated in providing bona fide fringe benefits under a plan or program, Provided, That the Secretary of Labor has found, upon the written request of the contractor, in accordance with the criteria set forth at 29 CFR 5.28, that the applicable standards of the Davis-Bacon Act have been met. The Secretary of Labor may require the contractor to set aside in a separate account assets for the meeting of obligations under the plan or program.

(v) In the event of a failure to pay all or part of the wages required by the contract, the contractor will be required to pay interest on any underpayment of wages.

(2) Withholding - ARRC shall upon its own action or upon written request of an authorized representative of the Department of Labor withhold or cause to be withheld from the contractor under this contract so much of the accrued payments or advances as may be considered necessary to satisfy the liabilities of the prime contractor or any subcontractor for the full amount of wages and monetary relief, including interest, required by the clauses set forth in paragraph (1) of this section for violations of this contract, or to satisfy any such liabilities required by any other federally assisted contract subject to Davis Bacon labor standards, that is held by the same prime contractor (as defined in 49 CFR 5.2). The necessary funds may be withheld from the contractor under this contract, or any other federally assisted contract that is subject to Davis Bacon labor standards and is held by the same prime contractor, regardless of whether the other contract was awarded or assisted by the same agency, and such funds may be used to satisfy the contractor liability for which the funds were withheld.. In the event of a contractor's failure to pay any laborer or mechanic, including any apprentice or helper working on the site of the work (or otherwise working in construction or development of the project under a development statute), all or part of the wages required by the contract or upon the contractor's failure to submit the required records as discussed in paragraph (3)(iv) (required disclosures and access) of this section, ARRC may, after written notice to the contractor, sponsor, applicant, or owner, or other entity, as the case may be, take such action as may be necessary to cause the suspension of any further payment, advance, or guarantee of funds until such violations have ceased.

(3) Certified payrolls and basic records - (i) **Length of record retention:** All regular payrolls and other basic records shall be maintained by the contractor and any subcontractor during the course of the work and preserved for all laborers and mechanics working at the site of the work (or otherwise working in construction or development of the project under a development statute) for a period of at least three years after all the work on the prime contract is completed. **Information required:** Such records shall contain the name; Social Security number; last known address, telephone number, and email address of each such worker, each worker's correct classification(s) of work actually performed; hourly rates of wages paid (including rates of contributions or costs anticipated for bona fide fringe benefits or cash equivalents thereof of the types described in 40 USC 3141(2)(B) of the Davis-Bacon Act); daily and weekly number of hours actually worked in total and on each covered contract; deductions made; and actual wages paid. **Additional records relating to fringe benefits:** Whenever the Secretary of Labor has found under 29 CFR 5.5(a)(1)(v) that the wages of any laborer or mechanic include the amount of any costs reasonably anticipated in providing benefits under a plan or program described in 40 USC 3141(2)(B) of the Davis-Bacon Act, the contractor shall maintain records which show that the commitment to provide such benefits is enforceable,

that the plan or program is financially responsible, and that the plan or program has been communicated in writing to the laborers or mechanics affected, and records which show the costs anticipated or the actual cost incurred in providing such benefits. **Additional records relating to apprenticeship:** Contractors with apprentices working under approved programs shall maintain written evidence of the registration of apprenticeship programs, the registration of the apprentices, and the ratios and wage rates prescribed in the applicable programs.

(ii) **Certified payroll requirements -** (A) **Frequency and method of submission.** The contractor or subcontractor shall submit weekly, for each week in which any Davis Bacon Act- or Related Acts-covered contract work is performed, a copy of all payrolls to ARRC for transmission to the Federal grantor agency. The prime contractor is responsible for the submission of all certified payrolls by all subcontractors.

(B) **Information required.** The certified payrolls submitted shall set out accurately and completely all of the information required to be maintained under 29 CFR 5.5(a)(3)(i)(B), except that full Social Security numbers and last known addresses, telephone numbers, and email addresses must not be included on weekly transmittals. Instead, the certified payrolls need only include an individually identifying number for each worker (e.g., the last four digits of the worker's Social Security number). This information may be submitted in any form desired. Optional Form WH-347 is available for this purpose from the Wage and Hour Division (WHD) website at https://www.dol.gov/sites/dolgov/ files/WHD/legacy/files/wh347/.pdf or its successor website.

(C) **Statement of compliance.** Each certified payroll submitted shall be accompanied by a "Statement of Compliance," signed by the contractor or subcontractor or his or her agent who pays or supervises the payment of the persons working on the contract, and shall certify the following:

- That the certified payroll for the payroll period contains the information required to be provided under 29 CFR 5.5(a)(3)(ii), the appropriate information and basic records are being maintained under 29 CFR 5.5(a)(3)(i), and that such information is correct and complete;

- That each laborer or mechanic (including each helper and apprentice) working on the contract during the payroll period has been paid the full weekly wages earned, without rebate, either directly or indirectly, and that no deductions have been made either directly or indirectly from the full wages earned, other than permissible deductions as set forth in 29 CFR Part 3; and

- That each laborer or mechanic has been paid not less than the applicable wage rates and fringe benefits or cash equivalents for the classification(s) of work actually performed, as specified in the applicable wage determination incorporated into the contract.

(D) **Use of Optional Form WH-347**. The weekly submission of a properly executed certification set forth on the reverse side of Optional Form WH-347 shall satisfy the requirement for submission of the "Statement of Compliance" required by paragraph (a)(3)(ii)(C) of this section.

(E) **Signature.** The signature by the contractor, subcontractor, or the contractor's or subcontractor's agent must be an original handwritten signature or a legally valid electronic signature.

(F) **Falsification**. The falsification of any of the above certifications may subject the contractor or subcontractor to civil or criminal prosecution under 18 USC 1001 and 31 USC 3729.

(G) **Length of certified payroll retention.** The contractor or subcontractor must preserve all certified payrolls during the course of the work and for a period of 3 years after all the work on the prime contract is completed.

(iii) **Contracts, subcontracts, and related documents.** The contractor or subcontractor must maintain this contract or subcontract and related documents including, without limitation, bids, proposals, amendments, modifications, and extensions. The contractor or subcontractor must preserve these contracts, subcontracts, and related documents during the course of the work and for a period of 3 years after all the work on the prime contract is completed.

(iv) **Required disclosures and access –**

(A) **Required record disclosures and access to workers.** The contractor or subcontractor shall make the records required under paragraphs (a)(3)(i) through (iii) of this section, and any other documents

that ARRC or the Department of Labor deems necessary to determine compliance with the labor standards provisions of any of the applicable statutes referenced by 29 CFR § 5.1, available for inspection, copying, or transcription by authorized representatives of the Federal grantor agency or the Department of Labor, and shall permit such representatives to interview workers during working hours on the job.

(B) **Sanctions for non-compliance with records and worker access requirements.** If the contractor or subcontractor fails to submit the required records or to make them available, or refuses to permit worker interviews during working hours on the job, the Federal agency may, after written notice to the contractor, sponsor, applicant, owner, or other entity, as the case may be, that maintains such records or that employs such workers, take such action as may be necessary to cause the suspension of any further payment, advance, or guarantee of funds. Furthermore, failure to submit the required records upon request or to make such records available, or to permit worker interviews during working hours on the job, may be grounds for debarment action pursuant to 29 CFR § 5.12. In addition, any contractor or other person that fails to submit the required records or make those records available to the WHD within the time WHD requests that the records be produced will be precluded from introducing as evidence in an administrative proceeding under 29 CFR Part 6 any of the required records that were not provided or made available to WHD. WHD will take into consideration a reasonable request from the contractor or person for an extension of the time for submission of records. WHD will determine the reasonableness of the request and may consider, among other things, the location of the records and the volume of production.

(C) **Required information disclosures.** Contractors and subcontractors must maintain the full Social Security number and last known address, telephone number, and email address of each covered worker, and must provide them upon request to the Wage and Hour Division of the Department of Labor. The contractor, subcontractor, or both, must, upon request, provide the full Social Security number and last known address, telephone number, and email address of each covered worker to the applicant, sponsor, owner, or other entity, as the case may be, that maintains such records, for transmission to the Federal grantor agency, the contractor, or the Wage and Hour Division of the Department of Labor for purposes of an investigation or other compliance action.

(4) Apprentices and equal employment opportunity –

(i) Apprentices –

(A) **Rate of pay.** Apprentices will be permitted to work at less than the predetermined rate for the work they perform when they are employed pursuant to and individually registered in a bona fide apprenticeship program registered with the U.S. Department of Labor, Employment and Training Administration, Office of Apprenticeship (OA), or with a State Apprenticeship Agency recognized by the OA. A person who is not individually registered in the program, but who has been certified by the OA or a State Apprenticeship Agency (where appropriate) to be eligible for probationary employment as an apprentice, will be permitted to work at less than the predetermined rate for the work they perform in the first 90 days of probationary employment as an apprentice in such a program. In the event the OA or a State Apprenticeship Agency recognized by the OA withdraws approval of an apprenticeship program, the contractor will no longer be permitted to use apprentices at less than the applicable predetermined rate for the work performed until an acceptable program is approved.

(B) **Fringe benefits.** Apprentices must be paid fringe benefits in accordance with the provisions of the apprenticeship program. If the apprenticeship program does not specify fringe benefits, apprentices must be paid the full amount of fringe benefits listed on the wage determination for the applicable classification. If the WHD Administrator determines that a different practice prevails for the applicable apprentice classification, fringe benefits must be paid in accordance with that determination.

(C) **Apprenticeship ratio.** The allowable ratio of apprentices to journeyworkers on the job site in any craft classification shall not be greater than the ratio permitted to the contractor as to the entire work force under the registered program or the ratio applicable to the locality of the project pursuant to paragraph (4)(i)(D) of this section. Any worker listed on a payroll at an apprentice wage rate, who is not registered or otherwise employed as stated in paragraph (4)(i)(A) of this section, shall be paid not less than the applicable wage rate on the wage determination for the classification of work actually performed. In addition, any apprentice

performing work on the job site in excess of the ratio permitted under this section shall be paid not less than the applicable wage rate on the wage determination for the work actually performed.

(D) **Reciprocity of ratios and wage rates.** Where a contractor is performing construction on a project in a locality other than that in which its program is registered, the ratios and wage rates (expressed in percentages of the journeyworker's hourly rate) applicable within the locality in which the construction is being performed shall be observed. If there is no applicable ratio or wage rate for the locality of the project, the ratio and wage rate specified in the contractor's registered program must be observed.

(ii) Equal employment opportunity - The utilization of apprentices and journeyworkers under this part shall be in conformity with the equal employment opportunity requirements of 29 CFR Part 30.

(5) Compliance with Copeland Act requirements - The contractor shall comply with the requirements of 40 USC 3145 and 29 CFR Part 3, which are incorporated by reference in this contract.

(6) Subcontracts - The contractor or subcontractor shall insert in any subcontracts the clauses contained in 29 CFR 5.5(a)(1) through (11), along with the applicable wage determination(s) and such other clauses or contract modifications as the Federal Transit Administration may by appropriate instructions require, and a clause requiring the subcontractors to include these clauses and wage determination(s) in any lower tier subcontracts. The prime contractor shall be responsible for the compliance by any subcontractor or lower tier subcontractor with all the contract clauses in 29 CFR 5.5. In the event of any violations of these clauses, the prime contractor and any subcontractor(s) responsible will be liable for any unpaid wages and monetary relief, including interest from the date of the underpayment or loss, due to any workers of lower-tier subcontractors, and may be subject to debarment, as appropriate.

(7) Contract termination: debarment - A breach of the contract clauses in 29 CFR 5.5 may be grounds for termination of the contract, and for debarment as a contractor and a subcontractor as provided in 29 CFR 5.12.

(8) Compliance with Davis-Bacon and Related Act requirements - All rulings and interpretations of the Davis-Bacon and Related Acts contained in 29 CFR parts 1, 3, and 5 are herein incorporated by reference in this contract.

(9) Disputes concerning labor standards - Disputes arising out of the labor standards provisions of this contract shall not be subject to the general disputes clause of this contract. Such disputes shall be resolved in accordance with the procedures of the Department of Labor set forth in 29 CFR parts 5, 6, and 7. Disputes within the meaning of this clause include disputes between the contractor (or any of its subcontractors) and the contracting agency, the U.S. Department of Labor, or the employees or their representatives.

(10) Certification of eligibility - (i) By entering into this contract, the contractor certifies that neither it nor any person or firm who has an interest in the contractor's firm is a person or firm ineligible to be awarded Government contracts by virtue of 40 USC 3144(b) or 29 CFR 5.12(a).

(ii) No part of this contract shall be subcontracted to any person or firm ineligible for award of a Government contract by virtue of 40 USC 3144(b) or 29 CFR 5.12(a).

(iii) The penalty for making false statements is prescribed in the U.S. Code, Title 18 Crimes and Criminal Procedure, 18 USC 1001.

(11) Anti-retaliation - It is unlawful for any person to discharge, demote, intimidate, threaten, restrain, coerce, blacklist, harass, or in any other manner discriminate against, or to cause any person to discharge, demote, intimidate, threaten, restrain, coerce, blacklist, harass, or in any other manner discriminate against, any worker or job applicant for:

(i) Notifying any contractor of any conduct which the worker reasonably believes constitutes a violation of the DBA, Related Acts, or 29 CFR Part 1,3, or 5;

(ii) Filing any complaint, initiating or causing to be initiated any proceeding, or otherwise asserting or seeking

to assert on behalf of themselves or others any right or protection under the DBA, Related Acts, or 29 CFR Part 1, 3 or 5;

(iii) Cooperating in any investigation or other compliance action, or testifying in any proceeding under the DBA, Related Acts, or 29 CFR Part 1, 3 or 5; or

(iv) Informing any other person about their rights under the DBA, Related Acts, or 29 CFR Part 1, 3 or 5.

4. CONTRACT WORK HOURS AND SAFETY STANDARDS ACT – 40 USC 3701-3708.; 29 CFR Part 5; 29 CFR 1926; 2 CFR Part 200, App. II (E) [Applicable to all Federal-aid construction in excess of $100,000 and all non-construction contracts which employ mechanics and laborers on a public work in excess of $100,000]

A. Overtime (Applicable to construction and non-construction contracts)

(1) Overtime requirements - No contractor or subcontractor contracting for any part of the contract work which may require or involve the employment of laborers or mechanics shall require or permit any such laborer or mechanic in any workweek in which he or she is employed on such work to work in excess of forty hours in such workweek unless such laborer or mechanic receives compensation at a rate not less than one and one-half times the basic rate of pay for all hours worked in excess of forty hours in such workweek.

(2) Violation; liability for unpaid wages; liquidated damages - In the event of any violation of the clause set forth in paragraph (1) of this section the contractor and any subcontractor responsible therefore shall be liable for the unpaid wages and interest from the date of the underpayment. In addition, such contractor and subcontractor shall be liable to the United States for liquidated damages. Such liquidated damages shall be computed with respect to each individual laborer or mechanic, including watchpersons and guards, employed in violation of the clause set forth in paragraph (1) of this section, in the sum of $33 for each calendar day on which such individual was required or permitted to work in excess of the standard workweek of forty hours without payment of the overtime wages required by the clause set forth in paragraph (1) of thissection.

(3) Withholding for unpaid wages and liquidated damages - ARRC shall upon its own action or upon written request of an authorized representative of the Department of Labor withhold or cause to be withheld from the contractor so much of the accrued payments or advances as may be considered necessary to satisfy the liabilities of the prime contractor or any subcontractor for any unpaid wages; monetary relief, including interest; and liquidated damages required by the clauses set forth in this Section 4 of this contract, any other Federal contract with the same prime contractor, or any other federally assisted contract subject to the Contract Work Hours and Safety Standards Act that is held by the same prime contractor (as defined in 29 CFR § 5.2). The necessary funds may be withheld from the contractor under this contract, any other Federal contract with the same prime contractor, or any other federally assisted contract that is subject to the Contract Work Hours and Safety Standards Act and is held by the same prime contractor, regardless of whether the other contract was awarded or assisted by the same agency, and such funds may be used to satisfy the contractor liability for which the funds were withheld.

(4) Subcontracts - The contractor or subcontractor shall insert in any subcontracts the clauses set forth in this section and a clause requiring the subcontractors to include these clauses in any lower tier subcontracts. The prime contractor is responsible for compliance by any subcontractor or lower tier subcontractor with the clauses set forth in this section. In the event of any violations of these clauses, the prime contractor and any subcontractor(s) responsible will be liable for any unpaid wages and monetary relief, including interest from the date of the underpayment or loss, due to any workers of lower-tier subcontractors, and associated liquidated damages and may be subject to debarment, as appropriate.

(5) Anti-retaliation - It is unlawful for any person to discharge, demote, intimidate, threaten, restrain, coerce, blacklist, harass, or in any other manner discriminate against, or to cause any person to discharge, demote, intimidate, threaten, restrain, coerce, blacklist, harass, or in any other manner discriminate against, any worker or job applicant for:

(i) Notifying any contractor of any conduct which the worker reasonably believes constitutes a violation of the Contract Work Hours and Safety Standards Act (CWHSSA) or its implementing regulations in this part;

(ii) Filing any complaint, initiating or causing to be initiated any proceeding, or otherwise asserting or seeking to assert on behalf of themselves or others any right or protection under CWHSSA or this part;

(iii) Cooperating in any investigation or other compliance action, or testifying in any proceeding under CWHSSA or this part; or

(iv) Informing any other person about their rights under CWHSSA or this part.

(6) Payrolls and basic records - (i) Payrolls and basic records relating thereto shall be maintained by the contractor during the course of the work and preserved for a period of three years after all the work on the prime contract is completed for all laborers and mechanics, including guards and watchpersons, working on the contract. Such records shall contain the name; last known address, telephone number, and email address; and social security number of each such worker, each worker's correct classification(s) of work actually performed; hourly rates of wages paid (including rates of contributions or costs anticipated for bona fide fringe benefits or cash equivalents thereof of the types described in section 1(b)(2)(B) of the Davis-Bacon Act); daily and weekly number of hours actually worked; deductions made; and actual wages paid. Whenever the Secretary of Labor has found under 29 CFR 5.5(a)(1)(iv) that the wages of any laborer or mechanic include the amount of any costs reasonably anticipated in providing benefits under a plan or program described in section 1(b)(2)(B) of the Davis-Bacon Act, the contractor shall maintain records which show that the commitment to provide such benefits is enforceable, that the plan or program is financially responsible, and that the plan or program has been communicated in writing to the laborers or mechanics affected, and records which show the costs anticipated or the actual cost incurred in providing such benefits. Contractors with apprentices working under approved programs shall maintain written evidence of the registration of apprenticeship programs, the registration of the apprentices, and the ratios and wage rates prescribed in the applicable programs. The records to be maintained under this paragraph must be made available by the contractor or subcontractor for inspection, copying, or transcription by authorized representatives of ARRC and the Department of Labor, and the contractor or subcontractor will permit such representatives to interview workers during working hours on the job.

B. Contract Work Hours and Safety Standards Act (Applicable to construction contracts only) (i) The Contractor agrees to comply with section 107 of the Contract Work Hours and Safety Standards Act, 40 USC § 3704, and applicable DOL regulations, "Safety and Health Regulations for Construction" 29 CFR Part 1926. Among other things, the Contractor agrees that it will not require any laborer or mechanic to work in surroundings or under working conditions that are unsanitary, hazardous, or dangerous to health or safety, as established under construction safety and health standards the Secretary of Labor prescribes by regulation.

(ii) **Subcontracts -** The Contractor also agrees to include the requirements of this section in each subcontract. The term "subcontract" under this section is considered to refer to a person who agrees to perform any part of the labor or material requirements of a contract for construction, alteration or repair. A person who undertakes to perform a portion of a contract involving the furnishing of supplies or materials will be considered a "subcontractor" under this section if the work in question involves the performance of construction work and is to be performed: (1) directly on or near the construction site, or (2) by the employer for the specific project on a customized basis. Thus, a supplier of materials which will become an integral part of the construction is a "subcontractor" if the supplier fabricates or assembles the goods or materials in question specifically for the construction project and the work involved may be said to be construction activity. If the goods or materials in question are ordinarily sold to other customers from regular inventory, the supplier is not a "subcontractor." The requirements of this section do not apply to contracts or subcontracts for the purchase of supplies or materials or articles normally available on the open market.

5. <u>FEDERAL WATER POLLUTION CONTROL ACT</u> – 33 USC 1251-1387; 2 CFR Part 200, App. II (G) [Applicable to all Federal-aid contracts which exceed $150,000]

(1) The Contractor agrees to comply with all applicable standards, orders or regulations issued pursuant to the Federal Water Pollution Control Act, as amended, 33 USC 1251 <u>et seq.</u> The Contractor agrees to report each violation to ARRC and understands and agrees that ARRC will, in turn, report each violation as required to assure notification to the Federal grantor agency and the appropriate EPA Regional Office.

(2) The Contractor also agrees to include these requirements in each subcontract exceeding $150,000 financed in whole or in part with Federal funds.

6. CLEAN AIR ACT – 42 USC 7401-7671q; 2 CFR Part 200, App. II (G) [Applicable to all Federal-aid contracts which exceed $150,000]

(1) The Contractor agrees to comply with all applicable standards, orders or regulations issued pursuant to the Clean Air Act, as amended, 42 USC 7401 et seq. The Contractor agrees to report each violation to ARRC and understands and agrees that ARRC will, in turn, report each violation as required to assure notification to the Federal grantor agency and the appropriate EPA Regional Office. (2) The Contractor also agrees to include these requirements in each subcontract exceeding $150,000 financed in whole or in part with Federal funds.

7. ACCESS TO RECORDS AND REPORTS – 49 USC 5325(g); 2 CFR 200.337; 49 CFR Part 633 [Applicable to all Federal-aid contracts]

The following requirements apply to this Contract:

1. Contractor agrees to retain complete and readily accessible records related in whole or in part to the contract, including, but not limited to, data, documents, reports, statistics, leases, subcontracts, other third party contracts of any type, and supporting materials related to those records.

2. Contractor agrees to comply with the record retention requirements in accordance with 2 CFR 200.334. Contractor agrees to maintain all books, records, accounts and reports required under this contract for a period of not less than three years after the date of termination or expiration of this contract, except in the event of litigation or settlement of claims arising from the performance of this contract, in which case Contractor agrees to maintain the same until ARRC, the Federal grantor agency, the Comptroller General, or any of their duly authorized representatives, have disposed of all such litigation, appeals, claims or exceptions related thereto.

3. Contractor agrees to provide sufficient access to the U.S. Secretary of Transportation, the Comptroller General, the Federal grantor agency, ARRC, and their duly authorized representatives to inspect and audit records and information, including such records and information the contractor or its subcontractors may regard as confidential or proprietary, related to the performance of this contract in accordance with 2 CFR § 200.337.

4. Contractor agrees to permit the Federal grantor agency, ARRC, and their duly authorized representatives access to the sites of performance under this contract in accordance with 2 CFR § 200.337 and 49 CFR § 633.15, as applicable.

5. Contractor agrees to include these requirements in each subcontract financed in whole or in part with Federal funds.

8. CHANGES TO FEDERAL REQUIREMENTS – [Applicable to all Federal-aid contracts]

Federal Changes - Contractor shall at all times comply with all applicable Federal laws, regulations, policies, procedures and directives, including without limitation those listed directly or by reference in the Agreement between ARRC and the Federal grantor agency, as they may be amended or promulgated from time to time during the term of this contract. Contractor's failure to so comply shall constitute a material breach of this contract. Applicable changes to such federal requirements will apply to each subcontract and parties thereto at any tier.

9. NO GOVERNMENT OBLIGATION TO THIRD PARTIES – [Applicable to all Federal-aid contracts]

(1) ARRC and Contractor acknowledge and agree that, notwithstanding any concurrence by the Federal Government in or approval of the solicitation or award of this contract, absent the express written consent by the Federal Government, the Federal Government is not a party to this contract and shall not be subject to any obligations or liabilities to ARRC, Contractor, or any other party (whether or not a party to that contract) pertaining to any matter resulting from the contract.

(2) Contractor agrees to include the above clause in each subcontract financed in whole or in part with Federal assistance. It is further agreed that the clause shall not be modified, except to identify the subcontractor who will be subject to its provisions.

10. PROGRAM FRAUD AND FALSE OR FRAUDULENT STATEMENTS AND RELATED ACTS – 49 USC 5323(l)(1); 31 USC 3801-3812; 49 CFR Part 31; 18 USC 1001 [Applicable to all Federal-aid contracts]

(1) The Contractor acknowledges that the provisions of the Program Fraud Civil Remedies Act of 1986, as amended, 31 USC §3801 et seq. and U.S. DOT regulations, "Program Fraud Civil Remedies," 49 CFR Part 31, apply to its actions pertaining to this Project. Upon execution of the underlying contract, the Contractor certifies or affirms the truthfulness and accuracy of any statement it has made, it makes, it may make, or causes to be made, pertaining to the underlying contract or the Federally assisted project for which this contract work is being performed. In addition to other penalties that may be applicable, the Contractor further acknowledges that if it makes, or causes to be made, a false, fictitious, or fraudulent claim, statement, submission, or certification, the Federal Government reserves the right to impose the penalties of the Program Fraud Civil Remedies Act of 1986 on the Contractor to the extent the Federal Government deems appropriate.

(2) The Contractor also acknowledges that if it makes, or causes to be made, a false, fictitious, or fraudulent claim, statement, submission, or certification to the Federal Government under a contract connected with a project that is financed in whole or in part with Federal assistance, the Government reserves the right to impose the penalties of 18 USC §1001 and 49 USC 5323(l) on the Contractor, to the extent the Federal Government deems appropriate.

(3) The Contractor agrees to include the above two clauses in each subcontract financed in whole or in part with Federal assistance. It is further agreed that the clauses shall not be modified, except to identify the subcontractor who will be subject to the provisions.

11. SEISMIC SAFETY REQUIREMENTS – 42 USC 7701 et seq. & 49 CFR Part 41; Executive Order 12699 [Applicable only to Federal-aid contracts for the construction of new buildings or additions to existing buildings]

Seismic Safety - The contractor agrees that any new building or addition to an existing building will be designed and constructed in accordance with the standards for Seismic Safety required in Department of Transportation Seismic Safety Regulations, 49 CFR Part 41 and will certify to compliance to the extent required by the regulation. The contractor also agrees to ensure that all work performed under this contract including work performed by a subcontractor is in compliance with the standards required by the Seismic Safety Regulations and the certification of compliance issued on the project.

12. ENERGY CONSERVATION REQUIREMENTS – 42 USC 6321 et seq. & 49 CFR Part 622, Subpart C [Applicable to all Federal-aid contracts]

Energy Conservation - The Contractor agrees to comply with mandatory standards and policies relating to energy efficiency which are contained in the state energy conservation plan issued in compliance with the Energy Policy and Conservation Act.

13. CIVIL RIGHTS AND EQUAL OPPORTUNITY REQUIREMENTS – 49 USC 5332; 29 USC 623, 42 USC 2000e, 42 USC 6102, 42 USC 12112, 42 USC 12132, & 29 CFR Part 1630 et seq. [Applicable to all Federal-aid contracts]

The following requirements apply to the underlying contract:

1. Nondiscrimination in Federal Public Transportation Programs - Contractor shall prohibit: (a) discrimination based on race, color, religion, national origin, sex (including sexual orientation), disability, or age; (b) exclusion from participation in employment or a business opportunity for reasons identified in 49 USC § 5332; (c) denial of program benefits in employment or a business opportunity identified in 49 USC § 5332; and (d) discrimination identified in 49 USC § 5332, including discrimination in employment or a business opportunity identified in 49 USC § 5332.

2. Nondiscrimination – Title VI of the Civil Rights Act – Contractor shall prohibit discrimination based on race, color, or national origin, and comply with (1) Title VI of the Civil Rights Act of 1964, as amended, 42 USC § 2000d, et seq.; (2) U.S. DOT regulations, "Nondiscrimination in Federally-Assisted Programs of the Department of Transportation – Effectuation of Title VI of the Civil Rights Act of 1964," 49 CFR Part 21, including any amendments thereto; and (3) Federal transit law, specifically 49 USC § 5332.

3. Equal Employment Opportunity -: Contractor shall prohibit discrimination based on race, color, religion, sex, sexual orientation, or national origin. Contractor shall comply with: (a) Title VII of the Civil Rights Act of 1964, as amended, 42 USC § 2000e, et seq.; (b) Title I of the Americans with Disabilities Act of 1990, as amended, 42 USC §§ 12101, et seq.; (c) federal transit law, specifically 49 USC § 5332; and (d) FTA Circular 4704.1 "Equal Employment Opportunity (EEO) Requirements and Guidelines for Federal Transit Administration Recipients." Further, Contractor shall follow other federal guidance pertaining to EEO laws, regulations, and requirements.

4. The Contractor also agrees to include these requirements in each subcontract financed in whole or in part with Federal assistance, modified only if necessary to identify the affected parties.

14. VIOLATION AND BREACH OF CONTRACT – 2 CFR 200.327; 2 CFR Part 200, App. II(A)
[Applicable to all Federal-aid contracts in excess of $250,000]

Rights and Remedies of the ARRC

Except as may be otherwise provided in the contract documents, in the event that ARRC deems the contractor guilty of a default or breach of any provision under the Contract, ARRC shall have any and all rights and remedies provided by applicable law, including, but not limited to the following:

1. The right to take over and complete the work or any part thereof as agent for and at the expense of the Contractor, either directly or through other contractors;
2. The right to cancel this Contract as to any or all of the work yet to be performed;
3. The right to specific performance, an injunction or any other appropriate equitable remedy; and
4. The right to money damages.

Rights and Remedies of Contractor

Inasmuch as the Contractor can be adequately compensated by money damages for any breach of this Contract that may be committed by ARRC, Contractor expressly agrees that no default, act or omission of ARRC shall constitute a material breach of this Contract entitling Contractor to cancel or rescind the Contract (unless ARRC directs Contractor to do so) or to suspend or abandon performance. Contractor claims or disputes arising in the performance of this Contract which are not resolved by agreement of the parties shall be decided in accordance with ARRC's Procurement Rules.

Performance During Dispute - Unless otherwise directed by ARRC, Contractor shall continue performance under this contract while matters in dispute are being resolved.

Notification - In addition to the notice requirements set out elsewhere in this Contract, if Contractor becomes aware of any act or occurrence which may form the basis of a claim by Contractor for additional compensation or an extension of time for performance, or if any dispute arises regarding a question of fact or interpretation of the contract, Contractor shall immediately inform the Contract Manager. If the matter cannot be resolved by agreement within 7 days, Contractor shall, within the next 14 days, submit an Intent to Claim in writing to the Contract Manager. The claim, if not resolved, shall be presented to the Contract Manager, in writing, within 60 days following receipt of the Intent to Claim. Receipt of the claim will be acknowledged in writing by the Contract Manager. Contractor agrees that unless these written notices are provided, Contractor will have no entitlement to additional time or compensation for such act, event or condition.

Presenting Claim - A claim shall be submitted in accordance with ARRC Procurement Rule 1800.12 and shall specifically include the following:

1. The act, event or condition giving rise to the claim.
2. The contract provisions which apply to the claim and under which relief is provided.
3. The item or items of contract work affected and how they are affected.
4. The specific relief requested, including additional contract time if applicable, and the basis upon which it was calculated.

Claim Validity, Additional Information, & Contract Manager's Actions - The claim, in order to be valid, must not only show that the Contractor suffered damages or delay but that those conditions were actually a result of the act, event or condition complained of and that the contract provides entitlement to relief to the contractor for such act, event, or condition. The Contract Manager reserves the right to make written

request to the Contractor at any time for additional information which the Contractor may possess relative to the claim. The Contractor agrees to provide the Contract Manager such additional information within 30 days of receipt of such a request. Failure to furnish such additional information may be regarded as a waiver of the claim. The claim, if not resolved by agreement within 60 days of its receipt, will automatically be forwarded to the Contract Manager's supervisor for formal written decision.

Decision on Claim - The Contractor will be furnished the Contract Manager supervisor's decision within the next 90 days, unless additional information is requested by the ARRC. The Contract Manager supervisor's decision is final and conclusive unless fraudulent as to the Claim.

Notice of Appeal - Within 14 days of receipt of the Contract Manager supervisor's decision, the Contractor may deliver a Notice of Appeal to ARRC in accordance with ARRC Procurement Rule 1800.13 and request a hearing. The Notice of Appeal shall include specific exceptions to the Contract Manager supervisor's decision, including specific provisions of the contract which the Contractor intends to rely upon in the appeal. General assertions that the Contract Manager supervisor's decision is contrary to law or to fact are not sufficient.

Decision on Appeal - The decision of the ARRC on appeal will be rendered within 90 days after the conclusion of a hearing conducted under ARRC Procurement Rule 1800.15 or the date of receipt of the Notice of Appeal, whichever is later. The time limits given above may be extended by mutual consent. The decision of ARRC on appeal shall be final and conclusive unless the Contractor appeals to the superior court in accordance with ARRC Procurement Rule 1800.18.

15. HISTORIC PRESERVATION REQUIREMENTS – [Applicable to all Federal-Aid contracts]

Contractor shall comply with (1) U.S. DOT laws, including 49 USC § 303 (often referred to as "section 4(f)"), which requires certain finds be made before an Award may be undertaken if it involves the use of any land from a historic site that is on or eligible for inclusion on the National Register of Historic Places; (2) federal historic and archaeological preservation requirements of section 106 of the National Historic Preservation Act, as amended, 54 USC § 306108; (3) the Archeological and Historic Preservation Act of 1974, as amended, 54 USC § 312501 et seq.; (4) U.S. Advisory Council on Historic Preservation regulations, "Protection of Historic Properties," 36 CFR Part 800; and (5) other federal requirements and federal guidance to avoid or mitigate adverse effects on historic properties In the performance of this contract, neither Contractor nor its subcontractors shall take any action (which term includes but is not limited to the seeking of any required federal license or permit, and the extraction of material or natural resources from any source whatsoever) that may affect a district, site, building, structure or object that is included in or eligible for inclusion in the National Register of Historic Places without prior notice to ARRC and compliance with the above-listed requirements. Contractor is advised that both historic and cultural sites may be eligible for inclusion on the National Register.

16. INDIAN SACRED SITES – [Applicable to all Federal-Aid contracts]

Contractor shall facilitate compliance with federal efforts to promote the preservation of places and objects of religious importance to American Indians, Eskimos, Aleuts, and Native Hawaiians, and facilitate compliance with the American Indian Religious Freedom Act, 42 U.S.C. § 1996, and Executive Order No. 13007, "Indian Sacred Sites," May 24, 1996, 42 U.S.C. § 3161 note (61 Fed. Reg. 26771).

17. FLY AMERICA REQUIREMENT – 49 USC 40118; 41 CFR 301-10 [Applicable to all Federal-aid contracts which may involve the international air transportation of equipment, materials, commodities, products or personnel]

a) *Definitions.* As used in this clause--

"International air transportation" means transportation by air between a place in the United States and a place outside the United States or between two places both of which are outside the United States
.

"United States" means the 50 States, the District of Columbia, and outlying areas.

"U.S.-flag air carrier" means an air carrier holding a certificate under 49 U.S.C. Chapter 411.

b) When Federal funds are used to fund travel, Section 5 of the International Air Transportation Fair Competitive Practices Act of 1974 (49 USC 40118) (Fly America Act) requires contractors, recipients, and

others use U.S.-flag air carriers for U.S. Government-financed international air transportation of personnel (and their personal effects) or property, to the extent that service by those carriers is available. It requires the Comptroller General of the United States, in the absence of satisfactory proof of the necessity for foreign-flag air transportation, to disallow expenditures from funds, appropriated or otherwise established for the account of the United States, for international air transportation secured aboard a foreign-flag air carrier if a U.S.-flag air carrier is available to provide such services.

c) If available, the Contractor, in performing work under this contract, shall use U.S.-flag carriers for international air transportation of personnel (and their personal effects) or property.

d) In the event that the Contractor selects a carrier other than a U.S.-flag air carrier for international air transportation, the Contractor shall include a statement on vouchers involving such transportation essentially as follows:

Statement of Unavailability of U.S.-Flag Air Carriers

International air transportation of persons (and their personal effects) or property by U.S.-flag air carrier was not available or it was necessary to use foreign-flag air carrier service for the following reasons. See FAR § 47.403. *[State reasons]:*

_____

_____

The Contractor agrees to include the requirements of this section in all subcontracts that may involve international air transportation.

18. RECYCLED PRODUCTS – 42 USC 6962; 40 CFR PART 247; 2 CFR 200.323; 2 CFR Appendix II(J) [Applicable to all Federal-aid contracts for items designated by the EPA, for the purchase of $10,000 or more of one of these items during the fiscal year]

The Contractor agrees to provide a preference for those products and services that conserve natural resources, protect the environment, and are energy efficient by complying with and facilitating compliance with Section 6002 of the Resource Conservation and Recovery Act, as amended, 42 USC 6962, and U.S. Environmental Protection Agency (U.S. EPA), "Comprehensive Procurement Guideline for Products Containing Recovered Materials," 40 CFR Part 247. The Contractor agrees to include these requirements in each subcontract financed in whole or in part with Federal funds.

19. INCORPORATION OF FEDERAL TRANSIT ADMINISTRATION TERMS – FTA Circular 4220.1G [Applicable to all FTA funded contracts]

The provisions herein include, in part, certain Standard Terms and Conditions required by USDOT, whether or not expressly set forth in the contract provisions. All contractual provisions required by USDOT, as set forth in FTA Circular 4220.1G are incorporated by reference. Anything to the contrary herein notwithstanding, all FTA mandated terms shall be deemed to control in the event of a conflict with other provisions contained in this agreement. The contractor shall not perform any act, fail to perform any act, or refuse to comply with any ARRC requests which would cause ARRC to be in violation of the FTA terms and conditions.

20. DISADVANTAGED BUSINESS ENTERPRISE (DBE) PROGRAM – 49 CFR Part 26. [Applicable to all U.S. Department of Transportation-funded contracts, including those funded by FTA and FHWA]

1. Assurance - The contractor or subcontractor shall not discriminate on the basis of race, color, national origin, or sex in the performance of this contract. The contractor shall carry out applicable requirements of 49 CFR Part 26 in the award and administration of U.S. Department of Transportation-assisted contracts. Failure by the contractor to carry out these requirements is a material breach of this contract, which may result in the termination of this contract or such other remedy as the ARRC deems appropriate, which may include, but is not limited to:

(1) Withholding monthly progress payments;
(2) Assessing sanctions;
(3) Liquidated damages; and/or
(4) Disqualifying the contractor from future bidding as non-responsible. 49 CFR 26.13(b).

2. Contract Goal – ARRC runs a completely DBE-neutral DBE program. Accordingly, this contract has no specific contract goal for the participation of Disadvantaged Business Enterprises (DBEs). ARRC does have an overall annual goal that it strives to meet, however. The ARRC therefore strongly encourages the contractor to use the services of small businesses, including DBEs, as subcontractors whenever possible. The ARRC requests that the contractor consider such measures as: (1) subcontracting to small businesses, including DBEs, portions of the work the contractor might otherwise do with its own forces; (2) reducing or waiving subcontractor bonding requirements for small businesses, including DBEs; (3) reviewing the list of businesses certified in the Small Business Administration's 8(a) Business Development Program for potential subcontractors [contact the SBA at (907) 271-4022]; and (4) reviewing the list of businesses certified as DBEs by the Alaska Unified Certification Program for potential subcontractors [http://www.dot.state.ak.us/cvlrts/directory.shtml].

3. Prompt Payment - The prime contractor agrees to pay each subcontractor under this prime contract for satisfactory performance of its contract no later than thirty (30) days from the receipt of each payment the prime contractor receives from the ARRC. The prime contractor agrees further to return retainage payments to each subcontractor within thirty (30) days after the subcontractor's work is satisfactorily completed, even if the prime contractor's work has not been completed. Any retainage not returned to a subcontractor will be reported to the ARRC by the prime contractor. This clause applies to both DBE and non-DBE subcontractors.

21. <u>FHWA BUY AMERICA REQUIREMENTS</u> – 23 CFR 635.410 [Applicable only to FHWA funded construction contracts in excess of $150,000]

Contractor shall ensure all iron, steel, manufactured products, and construction materials are produced in the United States as required by 2 CFR Part 184 Buy America Preferences for Infrastructure Projects and 23 CFR 635.410, Buy America Requirements. Unless a waiver has been granted by the FHWA, all steel and iron materials which are incorporated into the work, and the action of applying a coating to a covered material (i.e., steel and iron), shall be manufactured in the United States except that minor amounts of steel and iron materials of foreign manufacture may be used, provided the aggregate cost of such materials does not exceed one tenth of one percent (0.1 percent) of the total contract amount, or $2500, whichever is greater. Coating includes epoxy coating, galvanizing, painting, and any other coating that protects or enhances the value of a material subject to the requirements of this section. For the purposes of this section, the cost is the value of the products as they are delivered to the project. When steel and iron materials manufactured in the United States are shipped to a foreign country where non-steel or iron products are installed on or in them (i.e., electronic components in a steel cabinet), the steel and iron is considered to meet the requirements of this section. A certification of materials origin, attesting to compliance with this provision, shall be furnished to the Engineer prior to incorporating any steel or iron products into the project. Bidders may submit an alternate bid for the project based on the use of foreign iron or steel materials. In this event, the contract will be awarded to the bidder who submits the lowest total responsive bid based on furnishing domestic iron and steel materials unless such total bid exceeds the lowest total responsive bid based on furnishing foreign steel and iron materials by more than 25 percent.

Manufactured products to be used and permanently incorporated in an FHWA construction project shall be produced in the United States. "Produced in the United States," in the case of manufactured products, means: (A) For projects obligated on or after October 1, 2025, the product was manufactured in the United States; and (B) For projects obligated on or after October 1, 2026, the product was manufactured in the United States and the cost of the components of the manufactured product that are mined, produced, or manufactured in the United States is greater than 55 percent of the total cost of all components of the manufactured product.

<u>Certificate of Compliance with 23 CFR 635.410</u>

As the bidder's or offeror's authorized representative, I certify that, as of the date of my signature below, all iron or steel products, all products predominantly of iron or steel or a combination of both, all manufactured products, and all construction materials to be provided pursuant to the contract and classified as domestic meet the domestic requirements of 23 CFR Part 635.410 and 2 CFR Part 184.

Date:_____

Signature:_____

Company Name:_____

Title:_____

22. FTA BUY AMERICA REQUIREMENTS – 49 USC 5323(j) and (u); 49 CFR Part 661 [Applicable only to FTA funded projects that involve the purchase of more than $150,000 of iron, steel, manufactured goods or rolling stock]

Buy America – The contractor agrees to comply with 49 USC 5323(j), 49 CFR Part 661, and 2 CFR 200.322, which provide that Federal funds may not be obligated unless all steel, iron, and manufactured products used in FTA-funded projects are produced in the United States, unless a waiver has been granted by FTA or the product is subject to a general waiver. General waivers are listed in 49 CFR 661.7. Separate requirements for rolling stock are set out at 49 USC 5323(j)(2)(C), 49 USC 5323(u), and 49 CFR 661.11.

Build America, Buy America Act – Construction materials used in the Project are subject to the domestic preference requirement of the Build America, Buy America Act, Pub. L. 117-58, div. G, tit. IX, §§ 70911 – 70927 (2021), as implemented by the U.S. Office of Management and Budget's "Buy America Preferences for Infrastructure Projects," 2 CFR Part 184. Compliance with FTA's "Buy America Requirements," 49 CFR Part 661, and "Buy America Preferences for Infrastructure Projects," 2 CFR Part 184, shall be deemed to satisfy 2 CFR § 200.322, "Domestic Preferences for Procurements."

A bidder or offeror must submit to the ARRC the appropriate Buy America certification (below) with all bids or offers on FTA-funded contracts, except those subject to a general waiver. Bids or offers that are not accompanied by a completed Buy America certification must be rejected as nonresponsive.

Certification requirement for procurement of steel, iron, manufactured products, and construction materials:

Certificate of Compliance

The bidder or offeror hereby certifies that it will comply with the requirements of 49 USC 5323(j)(1), and the applicable regulations in 49 CFR Part 661.

Date:_____
Signature:_____
Company Name:_____
Title:_____

Certificate of Non-Compliance

The bidder or offeror hereby certifies that it cannot comply with the requirements of 49 USC 5323(j), but it may qualify for an exception to the requirement pursuant to 49 USC 5323(j)(2), as amended, and the applicable regulations in 49 CFR 661.7..

Date:_____
Signature:_____
Company Name:_____
Title:_____

Certification requirement for procurement of rolling stock and associated equipment:

Certificate of Compliance

The bidder or offeror hereby certifies that it will comply with the requirements of 49 USC 5323(j) and the applicable regulations at 49 CFR 661.11.

Date:_____
Signature:_____
Company Name:_____
Title:_____

[continued next page]

Certificate of Non-Compliance

The bidder or offeror hereby certifies that it cannot comply with the requirements of 49 USC 5323(j), but may qualify for an exception to the requirement consistent with 49 USC 5323(j)(2)(C), and the applicable regulations in 49 CFR 661.7.

Date:_____
Signature:_____
Company Name:_____
Title:_____

23. BUY AMERICAN REQUIREMENTS-SUPPLIES – 41 USC 8301-8305; 48 CFR Part 25 [If required under the terms of the grant agreement, applicable only to federally-funded contracts for the purchase of goods, supplies or equipment in excess of $10,000]

(a) The FRA and certain other federal agencies require their grantees to comply with The Buy American Act (41 U.S.C. 8301 *et seq*.) which provides that preference be given to domestic end products.

Commercially available off-the-shelf (COTS) item, as used in this clause, means

(1) any item of supply (including construction material) that is (i) a commercial product, as defined in paragraph (1) of the definition at 48 CFR 2.101; (ii) sold in substantial quantities in the commercial marketplace; and (iii) offered under this contract in the same form in which it is sold in the commercial marketplace; and

(2) does not include bulk cargo, as defined in 46 USC 40102(4), such as agricultural products and petroleum products.

Component, as used in this clause, means an article, material, or supply incorporated directly into an end product.

Cost of components, as used in this clause, means

(1) For components purchased by the Contractor, the acquisition cost, including transportation costs to the place of incorporation into the end product (whether or not such costs are paid to a domestic firm), and any applicable duty (whether or not a duty-free entry certificate is issued); or

(2) For components manufactured by the Contractor, all costs associated with the manufacture of the component, including transportation costs as described in paragraph (1) of this definition, plus allocable overhead costs, but excluding profit. Cost of components does not include any costs associated with the manufacture of the end product.

Critical component means a component that is mined, produced, or manufactured in the United States and deemed critical to the U.S. supply chain. The list of critical components is at FAR 25.105.

Domestic end product, as used in this clause, means

(1) For an end product that does not consist wholly or predominantly of iron or steel or a combination of both,

(i) an unmanufactured end product mined or produced in the United States;

(ii) an end product manufactured in the United States, if

(A) the cost of its components mined, produced, or manufactured in the United States exceeds 60 percent of the cost of all its components, except that the percentage will be 65 percent for items delivered in calendar years 2024 through 2028 and 75 percent for items delivered starting in calendar year 2029. Components of foreign origin of the same class or kind as the products referred to in subparagraphs (b) (2) or (3) of this clause shall be treated as domestic. Components of unknown origin are treated as foreign. Scrap generated, collected, and prepared for processing in the United States is considered domestic; or

(B) the end product is a COTS item.

(2) For an end product that consists wholly or predominantly of iron or steel or a combination of both, an end product manufactured in the United States, if the cost of foreign iron and steel constitutes less than 5 percent of the cost of all the components used in the end product. The cost of foreign iron and steel includes but is not limited to the cost of foreign iron or steel mill products (such as bar, billet, slab, wire, plate, or sheet), castings, or forgings utilized in the manufacture of the end product and a good faith estimate of the cost of all foreign iron or steel components excluding COTS fasteners. Iron

or steel components of unknown origin are treated as foreign. If the end product contains multiple components, the cost of all the materials used in such end product is calculated in accordance with the definition of "cost of components".

End product means those articles, materials, and supplies to be acquired for public use under this contract.

Fastener means a hardware device that mechanically joins or affixes two or more objects together. Examples of fasteners are nuts, bolts, pins, rivets, nails, clips, and screws.

Foreign end product means an end product other than a domestic end product.

Foreign iron and steel means iron or steel products not produced in the United States. Produced in the United States means that all manufacturing processes of the iron or steel must take place in the United States, from the initial melting stage through the application of coatings, except metallurgical processes involving refinement of steel additives. The origin of the elements of the iron or steel is not relevant to the determination of whether it is domestic or foreign.

Predominantly of iron or steel or a combination of both means that the cost of the iron and steel content exceeds 50 percent of the total cost of all its components. The cost of iron and steel is the cost of the iron or steel mill products (such as bar, billet, slab, wire, plate, or sheet), castings, or forgings utilized in the manufacture of the product and a good faith estimate of the cost of iron or steel components excluding COTS fasteners.

Steel means an alloy that includes at least 50 percent iron, between 0.02 and 2 percent carbon, and may include other elements.

United States means the 50 States, the District of Columbia, and outlying areas (as defined at 48 CFR 2.101).

(b) 41 USC chapter 83, Buy American, provides a preference for domestic end products for supplies acquired for use in the United States. In accordance with 41 USC 1907, the domestic content test of the Buy American statute is waived for an end product that is a COTS item, except that for an end product that consists wholly or predominantly of iron or steel or a combination of both, the domestic content test is applied only to the iron and steel content of the end product, excluding COTS fasteners.

(c) Offerors may obtain from the Contracting Officer a list of foreign articles that the Contracting Officer will treat as domestic for this contract.

(d) The Contractor shall deliver only domestic end products except to the extent that it specified delivery of foreign end products in the below "Buy American Certificate." Bids that are not accompanied by a completed Buy American certification may be rejected as nonresponsive.

Buy American Certificate
Certificate of Compliance with 41 USC 8301-8305 - Supplies

(a) 1) The bidder or offeror certifies that each end product, except those listed in paragraph (b) of this provision, is a domestic end product and that each domestic end product listed in paragraph (c) of this provision contains a critical component.

(2) The bidder or offeror shall list as foreign end products those end products manufactured in the United States that do not qualify as domestic end products. For those foreign end products that do not consist wholly or predominantly of iron or steel or a combination of both, the bidder or offeror shall also indicate whether these foreign end products exceed 65 percent domestic content, except for those that are COTS items. If the percentage of the domestic content is unknown, select “no.”

(3) The bidder or offeror shall separately list the line item numbers of domestic end products that contain a critical component (see FAR 25.105).

(4) The terms “commercially available off-the-shelf (COTS) item,” “critical component,” "domestic end product," "end product," and "foreign end product" are defined in the above clause entitled "Buy American Requirements – Supplies."

(b) Foreign End Products:

Line Item No.	Country of Origin	Exceeds 65% domestic Content (yes/no)

(List as necessary)

(c) Domestic end products containing a critical component:

Line Item No. ___

(List as necessary)

Date:_____

Signature:_____

Company Name:_____

Title:_____

24. BUY AMERICAN REQUIREMENT-CONSTRUCTION – 41 USC 8301-8305; 48 CFR Part 25 [If required under the terms of the grant agreement, applicable only to federally-funded construction contracts in excess of $10,000]

(a) The FRA and certain other federal agencies require their grantees to comply with The Buy American Act (41 U.S.C. 8301 *et seq.*) which provides that preference be given to domestic construction materials. As used in this clause-

Commercially available off-the-shelf (COTS) item—

(1) Means any item of supply (including construction material) that is–

(i) A commercial product (as defined in paragraph (1) of the definition of "commercial product" at Federal Acquisition Regulation (FAR) 2.101);

(ii) Sold in substantial quantities in the commercial marketplace; and

(iii) Offered to the Government, under a contract or subcontract at any tier, without modification, in the same form in which it is sold in the commercial marketplace; and

(2) Does not include bulk cargo, as defined in 46 USC 40102(4), such as agricultural products and petroleum products.

Construction material means an article, material, or supply brought to the construction site for incorporation into the building or work. Construction material also includes an item brought to the site pre- assembled from articles, materials, or supplies. However, emergency life safety systems, such as emergency lighting, fire alarm, and audio evacuation systems, which that are discrete systems incorporated into a public building or work and which that are produced as a complete systems, shall be evaluated as a single and distinct construction material regardless of when or how the individual parts or components of such systems are delivered to the construction site.

Cost of components means (1) For components purchased by the Contractor, the acquisition cost, including transportation costs to the place of incorporation into the construction material (whether or not such costs are paid to a domestic firm), and any applicable duty (whether or not a duty-free entry certificate is issued); or (2) For components manufactured by the Contractor, all costs associated with the manufacture of the component, including transportation costs as described in paragraph (1) of this definition, plus allocable overhead costs, but excluding profit. Cost of components does not include any costs associated with the manufacture of the construction material.

*Critical componen*t means a component that is mined, produced, or manufactured in the United States and deemed critical to the U.S. supply chain. The list of critical components is at FAR 25.105.

Critical item means a domestic construction material or domestic end product that is deemed critical to U.S. supply chain resiliency. The list of critical items is at FAR 25.105.

Domestic construction material means (1) For construction material that does not consist wholly or predominantly of iron or steel or a combination of both, (i) an unmanufactured construction material mined or produced in the United States, or (ii) a construction material manufactured in the U.S., if (A) the cost of its components mined, produced, or manufactured in the United States exceeds 65 percent of cost of all its components for items delivered in calendar years 2024 through 2028 and 75 percent for items delivered starting in calendar year 2029. Components of foreign origin of the same class or kind for which nonavailability determinations have been made shall be treated as domestic. Components of unknown origin are treated as foreign; or (B) The construction material is a COTS item; or (2) For construction material that consists wholly or predominantly of iron or steel or a combination of both, a construction material manufactured in the United States if the cost of foreign iron and steel constitutes less than 5 percent of the cost of all components used in such construction material. The cost of foreign iron and steel includes but is not limited to the cost of foreign iron or steel mill products (such as bar, billet, slab, wire, plate, or sheet), castings, or forgings utilized in the manufacture of the construction material and a good faith estimate of the cost of all foreign iron or steel components excluding COTS fasteners. Iron or steel components of unknown origin are treated as foreign. If the construction material contains multiple components, the cost of all the materials used in such construction material is calculated in accordance with the definition of "cost of

components".

Fastener means a hardware device that mechanically joins or affixes two or more objects together. Examples of fasteners are nuts, bolts, pins, rivets, nails, clips, and screws.

Foreign construction material means a construction material other than a domestic construction material.

Foreign iron and steel means iron or steel products not produced in the United States. Produced in the United States means that all manufacturing processes of the iron or steel must take place in the United States, from the initial melting stage through the application of coatings, except metallurgical processes involving refinement of steel additives. The origin of the elements of the iron or steel is not relevant to the determination of whether it is domestic or foreign.

Predominantly of iron or steel or a combination of both means that the cost of the iron and steel content exceeds 50 percent of the total cost of all its components. The cost of iron and steel is the cost of the iron or steel mill products (such as bar, billet, slab, wire, plate, or sheet), castings, or forgings utilized in the manufacture of the product and a good faith estimate of the cost of iron or steel components excluding COTS fasteners.

Steel means an alloy that includes at least 50 percent iron, between 0.02 and 2 percent carbon, and may include other elements.

"*United States*" means the 50 States, the District of Columbia, and outlying areas.

(b)(1) In accordance with 41 USC 1907, the domestic content test of the Buy American statute is waived for construction material that is a COTS item, except that for construction material that consists wholly or predominantly of iron or steel or a combination of both, the domestic content test is applied only to the iron and steel content of the construction materials, excluding COTS fasteners. (See FAR 12.505(a)(2)). The Buy American Act (41 USC 8301-8305) requires that only domestic construction material be used in performing this contract, except as provided in paragraphs (b)(2) and (b)(3) of this clause.

(2) The requirement in paragraph (b)(1) of this clause does not apply to information technology that is a commercial product or to the construction materials or components listed by the Government as follows: NONE

(3) Other foreign construction material may be used on this project if ARRC determines that-

(i) The cost of domestic construction material would be unreasonable. (A) *For domestic construction material that is not a critical item or does not contain critical components*. *(1)* The cost of a particular domestic construction material subject to the requirements of the Buy American statute is unreasonable when the cost of such material exceeds the cost of foreign material by more than 20 percent; *(2)* For construction material that is not a COTS item and does not consist wholly or predominantly of iron or steel or a combination of both, if the cost of a particular domestic construction material is determined to be unreasonable or there is no domestic offer received, and the low offer is for foreign construction material that is manufactured in the United States and does not exceed 55 percent domestic content, the Contracting Officer will treat the lowest offer of foreign construction material that exceeds 55 percent domestic content as a domestic offer and determine whether the cost of that offer is unreasonable by applying the evaluation factor listed in paragraph (b)(3)(i)(A)*(1)* of this clause. (*3)* The procedures in paragraph (b)(3)(i)(A)*(2)* of this clause will no longer apply as of January 1, 2030. (B) *For domestic construction material that is a critical item or contains critical components*. *(1)* The cost of a particular domestic construction material that is a critical item or contains critical components, subject to the requirements of the Buy American statute, is unreasonable when the cost of such material exceeds the cost of foreign material by more than 20 percent plus the additional preference factor identified for the critical item or construction material containing critical components listed at FAR 25.105. (*2)* For construction material that does not consist wholly or predominantly of iron or steel or a combination of both, if the cost of a particular domestic construction material is determined to be unreasonable or there is no domestic offer received, and the low offer is for foreign construction material that does not exceed 55 percent domestic content, the Contracting Officer will treat the lowest foreign offer of construction material that is manufactured in the United States and exceeds 55 percent domestic content as a domestic offer, and determine whether the cost of that offer is unreasonable by applying the evaluation factor listed in paragraph (b)(3)(i)(B)*(1)* of this clause. (*3)* The procedures in paragraph (b)(3)(i)(B)*(2)* of this clause will no longer apply as of January 1, 2030.

(ii) The application of the restriction of the Buy American Act to a particular construction material would be impracticable or inconsistent with the public interest; or

(iii) The construction material is not mined, produced, or manufactured in the United States in sufficient and reasonably available commercial quantities of a satisfactory quality.

(4) The Contractor agrees that only domestic construction materials will be used by the Contractor, subcontractors, material men, and suppliers in the performance of this contract, except for foreign construction materials, if any, listed in paragraph (b)(2) or allowed under paragraph (b)(3) of this clause.

(c) *Request for determination*. (1) Contractors requesting to use foreign construction material under paragraph (b)(3) of this clause shall provide adequate information for ARRC evaluation of the request for a determination regarding the inapplicability of the Buy American Act in time to allow determination before submission of bids or offers. Each submission shall include a description of the foreign and domestic construction materials, including unit of measure, quantity, price, time of delivery or availability, location of the construction project, name and address of the proposed contractor, and a detailed justification of the reason for use of foreign materials cited in accordance with paragraph (b)(3) of this clause. A submission based on unreasonable cost shall include a reasonable survey of the market and a completed price comparison table in the format in paragraph (d) of this clause. The price of construction material shall include all delivery costs to the construction site and any applicable duty (whether or not a duty-free certificate may be issued). Any Contractor request for a determination submitted after contract award shall explain why the Contractor could not reasonably foresee the need for such determination and could not have requested the determination before contract award. If the Contractor does not submit a satisfactory explanation, ARRC need not make a determination.

(2) If ARRC determines after contract award that an exception to the Buy American Act applies, the contract shall be modified to allow use of the foreign construction material, and adequate consideration shall be negotiated. However, when the basis for the exception is the unreasonable price of a domestic construction material, adequate consideration shall not be less than the differential established in paragraph (b)(3)(i) of this clause.

(3) If ARRC does not determine that an exception to the Buy American Act applies, the use of that particular foreign construction material will be a failure to comply with the Act.

(d) For evaluation of requests under paragraph (c) of this clause based on unreasonable cost, the following information and any applicable supporting data based on the survey of suppliers shall be included in the request:

FOREIGN AND DOMESTIC CONSTRUCTION
MATERIALS PRICE COMPARISON

Construction material description	Unit of Measure	Quantity	Price (Dollars)[1/]
Item 1: Foreign construction material Domestic construction material			
Item 2: Foreign construction material Domestic construction material			

List name, address, telephone number, and contact for suppliers surveyed. Attach copy of response; if oral, attach summary. Include other applicable supporting information.

[1/]Include all delivery costs to the construction site and any applicable duty (whether or not a duty-free entry certificate is issued).

A bidder must submit to ARRC the Buy American certification (below) with its bid response for federally-funded construction, as applicable. Bids that are not accompanied by a completed Buy American

certification may be rejected as nonresponsive.

Certificate of Compliance with 41 USC 8301-8305 - Construction

The bidder or offeror hereby certifies that the construction materials it proposes to provide hereunder comply with the requirements of 49 USC 8301-8305 and the applicable regulations in 48 CFR Part 25.

Date:_____

Signature:_____

Company Name:_____

Title:_____

25. CERTIFICATION REGARDING USE OF CONTRACT FUNDS FOR LOBBYING – 31 USC 1352; 2 CFR 200.450; 2 CFR 200 App. II(j); 49 CFR Part 20 [Applicable to all Federal-aid contracts and to all related subcontracts which exceed $100,000]

A bidder must submit to ARRC the below certification with its bid response for any Federally funded contract that exceeds $100,000. Bids that are not accompanied by a completed certification may be rejected as nonresponsive.

1. The undersigned Contractor certifies, to the best of his or her knowledge and belief, that:

a. No Federal appropriated funds have been paid or will be paid, by or on behalf of the undersigned, to any person for influencing or attempting to influence an officer or employee of any Federal agency, a Member of Congress, an officer or employee of Congress, or an employee of a Member of Congress in connection with the awarding of any Federal contract, the making of any Federal grant, the making of any Federal loan, the entering into of any cooperative agreement, and the extension, continuation, renewal, amendment, or modification of any Federal contract, grant, loan, or cooperative agreement.

b. If any funds other than Federal appropriated funds have been paid or will be paid to any person for influencing or attempting to influence an officer or employee of any Federal agency, a Member of Congress, an officer or employee of Congress, or an employee of a Member of Congress in connection with this Federal contract, grant, loan, or cooperative agreement, the undersigned shall complete and submit Standard Form-LLL, "Disclosure Form to Report Lobbying," in accordance with its instructions.

2. The undersigned also agrees that he or she shall require that the language of this certification be included in all lower tier subcontracts, which exceed $100,000 and that all such recipients shall certify and disclose accordingly.

3. This certification is a material representation of fact upon which reliance was placed when this transaction was made or entered into. Submission of this certification is a prerequisite for making or entering into this transaction imposed by 31 USC 1352 (as amended by the Lobbying Disclosure Act of 1995). Any person who fails to file the required certification shall be subject to a civil penalty of not less than $10,000 and not more than $100,000 for each such failure.

The Contractor,_____certifies or affirms the truthfulness and accuracy of each statement of its certification and disclosure, if any. In addition, the Contractor understands and agrees that the provisions of 31 USC 3801, *et seq.*, apply to this certification and disclosure, if any.

Signature of Contractor's Authorized Official:_____

Name and Title of Contractor's Authorized Official:_____

Date:_____

26. FTA PRE-AWARD AND POST DELIVERY AUDITS REQUIREMENTS – 49 USC 5323; 49 CFR Part 663 [Applicable only to FTA funded contracts for the purchase of rolling stock in excess of $150,000]

Pre-Award and Post-Delivery Audit Requirements - The Contractor agrees to comply with 49 USC 5323(m) and FTA's implementing regulation at 49 CFR Part 663 and to submit the following certifications:

(1) Buy America Requirements: The Contractor shall complete and submit a declaration certifying either compliance or noncompliance with Buy America. If the Bidder/Offeror certifies compliance with Buy America, it shall submit documentation which lists 1) component and subcomponent parts of the rolling stock to be purchased identified by manufacturer of the parts, their country of origin and costs; and 2) the location of the final assembly point for the rolling stock, including a description of the activities that will take place at the final assembly point and the cost of final assembly.

(2) Solicitation Specification Requirements: The Contractor shall submit evidence that it will be capable of meeting the bid specifications.

(3) Federal Motor Vehicle Safety Standards (FMVSS): The Contractor shall submit 1) manufacturer's FMVSS self-certification sticker information that the vehicle complies with relevant FMVSS or 2) manufacturer's certified statement that the contracted buses will not be subject to FMVSS regulations.

27. TRANSIT VEHICLE MANUFACTURER DISADVANTAGED BUSINESS ENTERPRISE CERTIFICATION – [Applicable to all FTA funded contracts for Transit Vehicles]

Certificate of Compliance with 49 CFR 26.49

The bidder or offeror hereby certifies that it has established a DBE goal and submitted it to the FTA for approval in accordance with the provisions of 49 CFR 26.49. The goal has either been approved or is pending approval by FTA.

Date:

_____

Signature:

_____

Company:

_____

Name:

_____

Title:

_____

28. SAFE OPERATION OF MOTOR VEHICLES – 23 USC Part 402; Executive Order No. 13043; Executive Order No. 13513; U.S. DOT Order No. 3902.10 [Applicable to all federally funded third party contracts]

Seat Belt Use - The Contractor is encouraged to adopt and promote on-the-job seat belt use policies and programs for its employees and other personnel that operate company-owned vehicles, company-rented vehicles, or personally operated vehicles. The terms “company-owned” and “company-leased” refer to vehicles owned or leased either by the Contractor or ARRC.

Distracted Driving - The Contractor agrees to adopt and enforce workplace safety policies to decrease crashes caused by distracted drivers, including policies to ban text messaging while using an electronic device supplied by an employer, and driving a vehicle the driver owns or rents, a vehicle Contactor owns, leases, or rents, or a privately-owned vehicle when on official business in connection with the work performed under this agreement. Contractor agrees to conduct workplace safety initiatives in a manner commensurate with its size, such as establishing new rules and programs to prohibit text messaging while

driving, re-evaluating the existing programs to prohibit text messaging while driving, and providing education, awareness, and other outreach to employees about the safety risks associated with texting while driving. Contractor shall include the substance of this paragraph in each third party subagreement at each tier supported with federal assistance.

29. PATENT RIGHTS – 2 CFR Part 200, App. II(F); 37 CFR Part 401 [Applicable to all federally funded contracts with a small business firm or nonprofit organization for the performance of experimental, developmental or research work]

This Project is funded through a Federal award for experimental, developmental, or research work purposes. As such, certain Patent Rights and Data Rights apply to all subject data first produced in the performance of this contract. The Contractor shall grant the ARRC intellectual property access and licenses deemed necessary for the work performed under this contract and in accordance with the requirements of 37 CFR Part 401, "Rights to Inventions Made by Nonprofit Organizations and Small Business Firms Under Government Grants, Contracts and Cooperative Agreements," and any implementing regulations issued by the federal grantor agency. The terms of an intellectual property agreement and software license rights will be finalized prior to execution of this contract and shall, at a minimum, include the following restrictions: Except for its own internal use, the Contractor may not publish or reproduce subject data in whole or in part, or in any manner or form, nor may the Contractor authorize others to do so, without the written consent of ARRC and the federal grantor agency, until such time as they may have either released or approved the release of such data to the public. This restriction on publication, however, does not apply to any contract with an academic institution. For purposes of this agreement, the term "subject data" means recorded information whether or not copyrighted, and that is delivered or specified to be delivered as required by the contract. Examples of "subject data" include, but are not limited to computer software, standards, specifications, engineering drawings and associated lists, process sheets, manuals, technical reports, catalog item identifications, and related information, but do not include financial reports, cost analyses, or other similar information used for performance or administration of the Contract.

1. The Federal Government reserves a royalty-free, non-exclusive and irrevocable license to reproduce, publish, or otherwise use, and to authorize others to use for "Federal Government Purposes," any subject data or copyright described below. For "Federal Government Purposes," means use only for the direct purposes of the Federal Government. Without the copyright owner's consent, the Federal Government may not extend its Federal license to any other party.

(a) Any subject data developed under the contract, whether or not a copyright has been obtained; and

(b) Any rights of copyright purchased by the Contractor using Federal assistance in whole or in part by the federal grantor agency.

2. Unless the federal grantor agency determines otherwise, the Contractor performing experimental, developmental, or research work required as part of this contract agrees to permit the federal grantor agency to make available to the public, either its license in the copyright to any subject data developed in the course of the contract, or a copy of the subject data first produced under the contract for which a copyright has not been obtained. If the experimental, developmental, or research work, which is the subject of this contract, is not completed for any reason whatsoever, all data developed under the contract shall become subject data as defined herein and shall be delivered as the Federal Government may direct.

3. Unless prohibited by state law, upon request by the Federal Government, the Contractor agrees to indemnify, save, and hold harmless the Federal Government, its officers, agents, and employees acting within the scope of their official duties against any liability, including costs and expenses, resulting from any willful or intentional violation by the Contractor of proprietary rights, copyrights, or right of privacy, arising out of the publication, translation, reproduction, delivery, use, or disposition of any data furnished under that contract. The Contractor shall be required to indemnify the Federal Government for any such liability arising out of the wrongful act of any employee, official, or agents of the Federal Government.

4. Nothing contained in this clause on rights in data shall imply a license to the Federal

Government under any patent or be construed as affecting the scope of any license or other right otherwise granted to the Federal Government under any patent.

5. Data developed by the Contractor and financed entirely without using Federal assistance provided by the Federal Government that has been incorporated into work required by the underlying contract is exempt from the requirements herein, provided that the Contractor identifies those data in writing at the time of delivery of the contract work.

6. The Contractor agrees to include these requirements in each subcontract for experimental, developmental, or research work financed in whole or in part with Federal assistance.

30. TERMINATION – 2 CFR 200.339; 2 CFR Part 200 App. II(B) [Applicable to all federally funded contracts in excess of $10,000]

Except as may be otherwise provided in the contract documents, the following termination provisions apply to this contract:

1. ARRC may, for its sole convenience, terminate this contract in whole or in part, at any time by giving written notice of its intention to do so. In the event of such termination, Contractor shall be entitled to receive payment in accordance with the payment provisions of this contract for charges incurred prior to the effective date of termination. Contractor shall not be paid for any work done after receipt of a notice of cancellation or for any costs incurred by Contractor's suppliers or subcontractors which Contractor could reasonably have avoided. In no event shall ARRC be liable for unabsorbed overhead or anticipatory profit on unperformed work.

2. In addition to ARRC's right to terminate this contract for its convenience, ARRC may, by written notice of default to Contractor, terminate the contract in whole or in part in the following circumstances:

(a) The Contractor refuses or fails to perform its obligations under the contract, or fails to make progress so as to significantly endanger timely completion or performance of the contract in accordance with its terms, and Contractor does not cure such default within a period of ten (10) days after receipt of written notice of default from ARRC or within such additional cure period as ARRC may authorize; or

(b) Reasonable grounds for insecurity arise with respect to Contractor's expected performance and Contractor fails to furnish adequate assurance of due performance (including assurance of performance in accordance with the time requirements of the contract) within ten (10) days after receipt of a written request by ARRC for adequate assurance; or

(c) Contractor becomes insolvent or makes an assignment for the benefit of creditors or commits an act of bankruptcy or files or has filed against it a petition in bankruptcy or reorganization proceedings.

3. Upon receipt of a notice of cancellation or termination, Contractor shall immediately discontinue all performance and it shall immediately cause any of its suppliers or subcontractors to cease such work unless the notice directs otherwise and deliver immediately to ARRC all products, reports, plans, drawings, specifications, data, summaries or other materials and information, whether completed or in process, accumulated by Contractor in performance of the contract. The rights and remedies of ARRC provided in this section shall not be exclusive and are in addition to any other rights and remedies provided by law.

31. PROHIBITION ON CERTAIN TELECOMMUNICATIONS AND VIDEO SURVEILLANCE SERVICES AND EQUIPMENT – 2 CFR § 200.216 [Applicable to all Federal-aid contracts]

Contractor and Subcontractor agree to comply with mandatory standards and policies relating to use and procurement of certain telecommunications and video surveillance services or equipment in compliance with the National Defense Authorization Act [Public Law 115-232 § 889].

32. NOTIFICATION TO FTA AND U.S. DOT INSPECTOR GENERAL; FLOW DOWN REQUIREMENT – FTA Master Agreement, Section 39(b)(1), (2); 2 CFR 180.220; 2 CFR 1200.220 [Applies to FTA-funded contracts/third party contracts in excess of $25,000]

If a current or prospective legal matter that may affect the Federal Government emerges, Contractor shall promptly notify ARRC, the FTA Chief Counsel, and the Regional Counsel for FTA Region 10. Contractor shall include these requirements as a flow down clause in its subcontracts at every tier, for any agreement that is a "covered transaction" according to 2 CFR §§ 180.220 and 1200.200. The types of legal matters that require notification include, but are not limited to, a major dispute, breach, default, litigation, or naming the Federal Government as a party to litigation or a legal disagreement in any forum for any reason.

Contractor must promptly notify ARRC, which must then promptly notify the U.S. DOT Inspector General in addition to the FTA Chief Counsel or Regional Counsel for Region 10 if Contractor has knowledge of potential fraud, waste, or abuse occurring on a project receiving assistance from FTA. The notification provision applies if a person has or may have submitted a false claim under the False Claims Act, 31 U.S.C. § 3729, et seq., or has or may have committed a criminal or civil violation of law pertaining to such matters as fraud, conflict of interest, bid rigging, misappropriation or embezzlement, bribery, gratuity, or similar misconduct involving federal assistance. This responsibility occurs whether the project is subject to this Contract or another agreement between ARRC and FTA, or an agreement involving a principal, officer, employee, agent, or Third-Party Participant of ARRC. It also applies to subcontractors at any tier. Knowledge, as used in this paragraph, includes, but is not limited to, knowledge of a criminal or civil investigation by a Federal, state, or local law enforcement or other investigative agency, a criminal indictment or civil complaint, or probable cause that could support a criminal indictment, or any other credible information in the possession of Contractor. In this paragraph, "promptly" means to refer information without delay and without change. This notification provision also applies to all divisions of ARRC, including divisions tasked with law enforcement or investigatory functions.

33. VETERAN HIRING PREFERENCE – 49 USC § 5325(k) [Applies to all FTA-funded contracts for capital construction projects]

Contractor shall give a hiring preference, to the extent practicable, to veterans (as defined in 5 USC § 2108) who have the requisite skills and abilities to perform the construction work required under the Contract. This clause shall not be understood, construed or enforced in any manner that would require an employer to give a preference to any veteran over any equally qualified applicant who is a member of any racial or ethnic minority, female, an individual with a disability, or a former employee.

34. <u>BUIILD AMERICA, BUY AMERICA ACT</u> – 2 CFR 200.322; Section 70914 of Pub. L. No. 117-58, div. G, tit. IX, subtit. A, 135 Stat. 429, 1298 (2021); 2 CFR Part 184 [Applies to all Federal-aid infrastructure contracts in excess of $250,000]

Contractors and their subcontractors who apply or bid for an award for an infrastructure project subject to the domestic preference requirement in the Build America, Buy America Act (BABA) shall file the required certification to ARRC with each bid or offer for an infrastructure project, unless a domestic preference requirement is waived by U.S. DOT. Contractors and subcontractors certify that no federal financial assistance funding for infrastructure projects will be provided unless all the iron, steel, manufactured projects, and construction materials used in the project are produced in the United States. BABA, Pub. L. No. 117-58, §§ 70901-52. Contractors and subcontractors shall also disclose any use of federal financial assistance for infrastructure projects that do not ensure compliance with BABA domestic preference requirements. Such disclosures shall be forwarded to ARRC which in turn will forward the disclosures to the federal awarding agency.

For contracts subject to BABA, contractors and subcontractors must sign and submit the following certification to the next tier (e.g., subcontractors submit to the contractor; contractors submit to the non-federal entity):

The undersigned certifies, to the best of its knowledge and belief, that:

The Build America, Buy America Act (BABA) requires that no federal financial assistance for “infrastructure” projects is provided “unless all of the iron, steel, manufactured products, and construction materials used in the project are produced in the United States.” Section 70914 of Public Law No. 117-58, §§ 70901-52.

The undersigned certifies that the iron, steel, manufactured products, and construction materials used in this contract are in full compliance with the BABA requirements including:

1. All iron and steel used in the project are produced in the United States. This means all manufacturing processes, from the initial melting stage through the application of coatings, occurred in the United States.

2. All manufactured products purchased with federal financial assistance must be produced in the United States. For a manufactured product to be considered produced in the United States, the cost of the components of the manufactured product that are mined, produced, or manufactured in the United States is greater than 55% of the total cost of all components of the manufactured product, unless another standard for determining the minimum amount of domestic content of the manufactured product has been established under applicable law or regulation.

3. All construction materials are manufactured in the United States. This means that all manufacturing processes for the construction material occurred in the United States.

The undersigned certifies or affirms the truthfulness and accuracy of each statement of its certification and disclosure, if any. In addition, the undersigned understands and agrees that the provisions of 31 U.S.C. Chap. 38, Administrative Remedies for False Claims and Statements, apply to this certification and disclosure, if any.

ALASKA RAILROAD

BUY AMERICA CERTIFICATION FORM
Build America, Buy America Act (BABA)

GENERAL INFORMATION	
1. GRANTEE: Alaska Railroad Corporation US DOT Grant Agreement Number:	2. SOLICIATION NUMBER
3. CONTRACTOR:	4. PROJECT NAME:

MATERIALS		
1A. MATERIAL TYPE: Select One 1B. NAME OF MANUFACTURER:	1C. LOCATION OF PRODUCT:	1D. DESCRIPTION:
2A. MATERIAL TYPE: Select One 2B. NAME OF MANUFACTURER:	2C. LOCATION OF PRODUCT:	2D. DESCRIPTION:
3A. MATERIAL TYPE: Select One 3B. NAME OF MANUFACTURER:	3C. LOCATION OF PRODUCT:	3D. DESCRIPTION:
4A. MATERIAL TYPE: Select One 4B. NAME OF MANUFACTURER:	4C. LOCATION OF PRODUCT:	4D. DESCRIPTION:
5A. MATERIAL TYPE: Select One 5B. NAME OF MANUFACTURER:	5C. LOCATION OF PRODUCT:	5D. DESCRIPTION:
6A. MATERIAL TYPE: Select One 6B. NAME OF MANUFACTURER:	6C. LOCATION OF PRODUCT:	6D. DESCRIPTION:
7A. MATERIAL TYPE: Select One 7B. NAME OF MANUFACTURER:	7C. LOCATION OF PRODUCT:	7D. DESCRIPTION:
8A. MATERIAL TYPE: Select One 8B. NAME OF MANUFACTURER:	8C. LOCATION OF PRODUCT:	8D. DESCRIPTION:
9A. MATERIAL TYPE: Select One 9B. NAME OF MANUFACTURER:	9C. LOCATION OF PRODUCT:	9D. DESCRIPTION:
10A. MATERIAL TYPE: Select One 10B. NAME OF MANUFACTURER:	10C. LOCATION OF PRODUCT:	10D. DESCRIPTION:
11A. MATERIAL TYPE: Select One 11B. NAME OF MANUFACTURER:	11C. LOCATION OF PRODUCT:	11D. DESCRIPTION:

MATERIALS

12A. MATERIAL TYPE: Select One 12B. NAME OF MANUFACTURER:	12C. LOCATION OF PRODUCT:	12D. DESCRIPTION:
13A. MATERIAL TYPE: Select One 13B. NAME OF MANUFACTURER:	13C. LOCATION OF PRODUCT:	13D. DESCRIPTION:
14A. MATERIAL TYPE: Select One 14B. NAME OF MANUFACTURER:	14C. LOCATION OF PRODUCT:	14D. DESCRIPTION:
15A. MATERIAL TYPE: Select One 15B. NAME OF MANUFACTURER:	15C. LOCATION OF PRODUCT:	15D. DESCRIPTION:
16A. MATERIAL TYPE: Select One 16B. NAME OF MANUFACTURER:	16C. LOCATION OF PRODUCT:	16D. DESCRIPTION:
17A. MATERIAL TYPE: Select One 17B. NAME OF MANUFACTURER:	17C. LOCATION OF PRODUCT:	17D. DESCRIPTION:
18A. MATERIAL TYPE: Select One 18B. NAME OF MANUFACTURER:	18C. LOCATION OF PRODUCT:	18D. DESCRIPTION:
19A. MATERIAL TYPE: Select One 19B. NAME OF MANUFACTURER:	19C. LOCATION OF PRODUCT:	19D. DESCRIPTION:
20A. MATERIAL TYPE: Select One 20B. NAME OF MANUFACTURER:	20C. LOCATION OF PRODUCT:	20D. DESCRIPTION:
21A. MATERIAL TYPE: Select One 21B. NAME OF MANUFACTURER:	21C. LOCATION OF PRODUCT:	21D. DESCRIPTION:

CERTIFICATION

I hereby certify the materials to be installed pursuant to the attached Bid Submittal conform to the Build America, Buy America Act (BABA) requirements under – 2 CFR 200.322; Section 70914 of Pub. L. No. 117-58, div. G, tit. IX, subtit. A, 135 Stat. 429, 1298 (2021); 2 CFR Part 184 [Applies to all Federal-aid infrastructure contracts in excess of $250,000]

By signing, I certify the statements above are true to the best of my ability and knowledge and that the listed materials for use in this project funded by federal dollars were produced in the United States of America.

CONTRACTOR NAME:	CONTRACTOR SIGNATURE:	DATE:
COMPANY NAME:		

35. FEDERAL TAX LIABILITY AND RECENT FELONY CONVICTIONS – US DOT Order 4200.6; FTA Master Agreement § 4(g) [Applies to all Federal-aid contracts]

1. Contractor certifies that it:

a. Does not have any unpaid federal tax liability that has been assessed, for which all judicial and administrative remedies have been exhausted or have lapsed, and that is not being paid in a timely manner pursuant to an agreement with the authority responsible for collecting the tax liability;

b. Has not been convicted of a felony criminal violation under any federal law within the preceding 24 months.

If Contractor cannot so certify, ARRC will refer the matter to FTA and not enter into any Third Party Agreement with Contractor without FTA's written approval.

2. Flow-Down. Contractor shall flow this requirement down to all subcontractors and material suppliers at all lower tiers, without regard to the value of any subagreement.

SECTION H
COST SCHEDULE

All material must comply with the specifications spelled out in Section C and Section H. All prices quoted must be F.O.B. Seattle, WA as specified in this Invitation to Bid 26-42-316459 ARRC Concrete Crossing Panels. A bidder's failure to provide the information requested in this section will be cause for rejection of the bid on the basis of non-responsiveness.

Description (all per Section C)	**Unit Cost**	**Total**
Gauge Concrete Crossing Panel; UP Common Standards for 141RE	$_____EA	$_____
Field Concrete Crossing Panel; UP Common Standards for 141RE	$_____EA	$_____
Gauge (Center) End Ramp Crossing Panel; For 141RE	$_____EA	$_____
Left Hand Field End Ramp Crossing Panel; For 141RE	$_____EA	$_____
Right Hand End Ramp Crossing Panel; For 141RE	$_____EA	$_____
Gauge (Center) End Ramp Crossing Panel; For 115RE	$_____EA	$_____
Left Hand Field End Crossing Panel; For 115RE	$_____EA	$_____
Right Hand End Ramp Crossing Panel; For 115RE	$_____EA	$_____
Gauge Concrete Crossing Panel; UP Common Standards for 115RE	$_____EA	$_____
Field Concrete Crossing Panel; UP Common Standards for 115RE	$_____EA	$_____
Gauge Concrete Crossing Panel; UP Common Standards for 136 RE	$_____EA	$_____

Field Concrete Crossing Panel;
UP Common Standards for 136 RE $_____EA $_____

Gauge (Center) End Ramp Crossing Panel;
For 136 RE
$_____EA $_____

Left Hand Field End Ramp Crossing Panel;
For 136 RE
$_____EA $_____

Right Hand End Ramp Crossing Panel;
For 136 RE
$_____EA $_____

LUMP SUM: $_____

Delivery date: Your bid should indicate the earliest firm delivery date after receipt of an order. ARRC fully expects the successful contractor to completely satisfy contract performance requirements in accordance with firm delivery date offered in this Cost Schedule. Please indicate the earliest possible delivery date after receipt of order: _____ weeks ARO.

Award Criteria: An award will be made to the lowest, responsive, responsible bidder that meets the requirements set forth in the specifications and compliance thereof. The Alaska Railroad Corporation reserves the right to determine that all offered materials will serve the application intended. Award will be made in the aggregate. The bid award is contingent on the availability of Alaska Railroad Corporation funds.

Non-Collusion Affidavit: The Undersigned declares, under penalty of perjury under the laws of the United States, that neither he/she nor the firm, association, or corporation of which he/she is a member, has, either directly or indirectly, entered into any agreement, participated in any collusion, or otherwise taken any action in restraint of free competitive bidding in connection with this Bid.

BIDDERS NAME AND ADDRESS

_____ _____
COMPANY NAME SIGNATURE BY AND FOR THE BIDDER

_____ _____
COMPANY ADDRESS PRINTED NAME OF ABOVE BIDDER

_____ _____
DATE OF BID

_____ _____
CONTACT PHONE NUMBER E-MAIL ADDRESS

MATERIAL SPECIFICATIONS:

1) STRUCTURAL STEEL SHALL CONFORM TO ASTM A-36 SPECIFICATIONS. WELDING TO BE PER AWS CODE.

2) ALL EXPOSED STEEL TO RECEIVE ONE COAT PRIMER.

3) END ANGLES FOR GAGE PANEL SHOULD HAVE 3" GAP MINIMUM TO IMPROVE SHUNT RESISTANCE. REINFORCING MATERIAL AND CLADDING TO BE CONSTRUCTED TO MEET SHUNTING REQUIREMENT. A NON-CONDUCTIVE SPACER TO BE ATTACHED TO GAGE FRAME.

4) CLADDING ON ENDS OF PANELS SHOULD EXTEND BEYOND CONCRETE 1/8" (+1/8", -0") TO IMPROVE MATCH WITH ADJACENT PANELS.

5) REINFORCING STEEL SHALL CONFORM TO CURRENT ASTM A615 SPECIFICATION, GRADE 60. IF ANY WELDING OF REINFORCEMENT STEEL IS REQUIRED, MATERIAL SHALL CONFORM TO ASTM A706 SPECIFICATION, GRADE 60.

6) CONCRETE MATERIAL MIXING, PLACING AND CURING TO BE IN ACCORDANCE WITH PCI "MANUAL FOR QUALITY CONTROL: PRECAST AND PRESTRESSED CONCRETE." MANUAL 115, EDITION 4. CEMENT SHALL HAVE NO MORE THAN 0.6% TOTAL ALKALI CONTENT. MAXIMUM WATER/CEMENT RATIO=0.44
(BY WEIGHT). AIR ENTRAINMENT=6%+/- 1% IN PLASTIC CONCRETE. SLUMP 3" MAXIMUM.

7) COPIES OF THE CONCRETE DESIGN MIX TO BE SUBMITTED TO RAILROADS FOR APPROVAL PRIOR TO THE START OF THE CASTING OPERATION.

8) TOP SURFACE SHALL BE NON-CRACK DESIGN AND IS TO BE SEALED TO PREVENT ION MIGRATION DUE TO SALTING.

9) CURING SHALL FOLLOW THE RECOMMENDATIONS AND PROCEDURES OF PCI IN 4TH EDITION DIVISION 4.

10) 3/16" WEEP/INSPECTION HOLES SHALL BE PLACED EVERY 2-FT. MIN. ALONG THE TOP OF THE STEEL FRAME ALONG A LINE 3/4" FROM OUTSIDE EDGE.

11) FLANGEWAY FILLER TO BE PERMANENTLY PREATTACHED AND HAVE THE FOLLOWING PROPERTIES:

* A SAMPLE SECTION OF THE FLANGEWAY MATERIAL SHALL BE PHYSICALLY TESTED BY APPLYING A LATERAL FORCE OF 10 LB/IN AT 50 DEGREES CELSIUS. THE MAXIMUM LATERAL DISPLACEMENT OF THE TEST IS NOT TO EXCEED 1/4" (CROSSING TYPE 10C ONLY). TEST RESULTS MUST BE SUBMITTED FOR RAILROAD APPROVAL.

* MANUFACTURER TO DESIGN THE PREATTACHED FLANGEWAY FILLER TO ALLOW FOR REMOVAL OF PANELS FOR MAINTENANCE WITHOUT DAMAGING THE FLANGEWAY FILLER OR ANY OTHER COMPONENTS DESIGNED TO HOLD IT TOGETHER.

* SEE PAGE 2 FOR MATERIAL SPECIFICATIONS.

TOLERANCES:

1) OUT OF SQUARE 3/16" (MEASURED ALONG THE DIAGONAL)

2) LENGTH, WIDTH, AND THICKNESS: +/-1/8"

3) THE BOTTOM SURFACE, WHICH WILL BE IN CONTACT WITH THE TIES, SHALL NOT UNDULATE IN ANY DIRECTION MORE THAN 3/32". SEE SPECIAL TESTING NOTE 3 BELOW.

4) REINFORCEMENT PLACEMENT SHALL BE +/-3/4" HORIZONTAL, +/-1/8" VERTICAL.

FINISH:

1) ALL RECESSES AND MINOR CONCRETE SPALLS ARE TO BE FILLED AND FINISHED TO THE PANEL DIMENTIONS USING THE PROPER BONDING AGENT AND REPAIR MATERIAL SURFACE OF THE REPAIRED AREA IS TO MATCH THE COLOR AND TEXTURE OF THE SURROUNDING AREAS.

2) THE DRIVING SURFACE IS TO HAVE A LIGHT BROOM FINISH OR AS APPROVED BY RAILROADS. THE ADDITION OF WATER TO THE CONCRETE SURFACE FINISH DURING CASTING IS NOT PERMITTED.

SPECIAL TESTING:

1) TWICE ANNUALY, VENDORS SHALL SUBMIT (VIA AN INDEPENDENT TESTING LABORATORY TO THE RAILROADS) THE FOLLOWING TEST ON THE APPROVED MIXED DESIGN
* ASTM C666 FREEZE/THAW
* ASTM C227 MORTAR BAR METHOD
* ASTM C1260 AT TOTAL ALKALI BURDEN = 0.06%

2) GAUGE PANELS SHALL BE DESIGNED WITH SHUNT RESISTANT FEATURES IN ORDER TO PROVIDE A MINIMUM ELECTRICAL RESISTANCE IN ACCORDANCE WITH THE STANDARD ELECTRICAL TEST (DWG 500930).

3) A REPRESENTATIVE SAMPLE OF PANELS SHALL BE CHECKED PERIODICALLY FOR BOTTOM FLATNESS BY USING A STRAIGHT EDGE CALIBRATED TO WITHIN +/-1/32" AND A TAPER GAUGE AS FOLLOWS:
8 POSITIONS OF FLATBAR (----) CHECK FLATNESS AT EACH POSITION USING TAPER GAUGE.

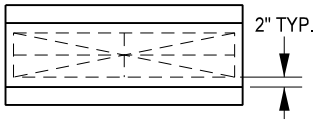

GENERAL:

1) THE MANUFACTURER SHALL BE ISO 9000 OR AAR M-1003 CERTIFIED. ALL TESTING PERSONNEL SHALL BE A MINIMUM OF ACI LEVEL I CERTIFIED.

2) THE FABRICATOR SHALL BE RESPONSIBLE FOR LOADING AND PROPERLY SECURING ALL PRECASTCONCRETE MEMBERS FOR SHIPMENT.

3) THE MANUFACTURER SHALL WARRANTY PRODUCT FOR A MINIMUM OF TEN YEARS AGAINST DEFECTS IN MATERIALS AND WORKMANSHIP.

4) MAUNFACTURER TO PERMANENTLY MARK EACH PANEL WITH A CONCRETE IMPRINT FOR SIZE OF RAIL, WEIGHT OF PANEL, MANUFACTURER'S I.D., MONTH/DAY/YEAR OF MANUFACTURE, AND CROSSING TYPE. END OF EACH PANEL TO BE STENCILED PAINTED WITH SIZE OF RAIL, WEIGHT OF PANEL AND CROSSING TYPE.

UNION PACIFIC RAILROAD ENGINEERING STANDARDS

GENERAL MANUFACTURING SPECIFICATIONS FOR ROAD CROSSINGS WITH CONCRETE PANELS

ADOPTED: SEP. 21, 2020
REVISED:
FILE NO.: 0308

STD DWG 0308 PAGE 1 OF 2

STD DWG 0308 PAGE 1 OF 2

Copyright © 2020 by Union Pacific Railroad

NON-CONDUCTIVE FILLER COMPOUND MATERIAL SPECIFICATIONS

AN ALL EPDM BASED COMPOUND IS TO BE USED IN THE UPRR ATTACHED CONCRETE PANEL FILLERS. IT IS TO HAVE SUPERIOR WEATHERING, AGING AND HEAT RESISTANCE CHARACTERISTICS AND IS TO BE MADE USING ONLY NON-CONDUCTIVE INGREDIENTS AND PIGMENTED SO IT IS A NON-MARKING GRAY OR BLACK COLOR.

THE COMPOUND MEETS LINE CALLOUT ASTM D2000 3BA714, A14, B13, C12, F17, Z1, Z2, Z3, Z4, Z5, Z6, Z7
Z1 = ULTIMATE ELONGATION INCREASE TO 400%
Z2 = HARDNESS INCREASE TO 75 +/- 5 SHORE A
Z3 = ADD COMPRESSION SET AT 257°F
Z4 = ADD FLUID RESISTANCE TEST
Z5 = ADD VOLUME RESISTIVITY TEST
Z6 = ADD MEGGAR TEST
Z7 = ADD TEAR STRENGTH

PHYSICAL PROPERTIES	UNIT	REQUIRED	LIMIT	TEST METHOD	TESTING FREQUENCY		
					BATCH	5TH BATCH	ANNUALLY
TENSILE STRENGTH	PSI	1400	MIN	ASTM D412		X	
ELONGATION	% (Z1)	400	MIN	ASTM D412		X	
HARDNESS	SHORE "A" (Z2) DURO POINTS	75	+/- 5	ASTM D2240	X		
HEAT RESISTANCE:				ASTM D573 70 HRS @ 212°F			X
TENSILE STRENGTH	% CHANGE	-25	MAX				
ELONGATION	% CHANGE	-25	MAX				
HARDNESS	POINTS CHANGE	+10	MAX				
COMPRESSION SET	% (Z3)			ASTM D395 B			X
		25	MAX	22 HRS @ 158°F			
		75	MAX	22 HRS @ 257°F			
OZONE RESISTANCE	N/A	PASS	NO CRACKS	ASTM D1171 METHOD B 70 HRS @ 50 pphm @ 104°F			X
FLUID RESISTANCE	% CHANGE (Z4)	+/- 5	MAX	ASTM D471 (WATER) 70 HRS @ 212°F			X
LOW TEMPERATURE BRITTLENESS	N/A	PASS	NO CRACKS	ASTM D2137 CONDITIONED 3 MIN @ -40°F IN METHANOL			X
VOLUME RESISTIVITY	OHM-CM (Z5)	1.0×10^{12}	MIN	ASTM D257 (DRY)			X
VOLUME RESISTIVITY	OHM-CM (Z5)	1.0×10^{11}	MIN	ASTM D257 (CONDITIONED IN AN 18% NaCl SOLUTION FOR 168 HRS @ 25°C)			X
VOLUME RESISTIVITY - COMPRESSION	OHM-CM (Z5)	1.0×10^{12}	SEE NOTE 1	VOL RESISTIVITY ASTM D257 WHILE UNDER COMPRESSION PER ASTM D575 A (SEE NOTE 10)			X
MEGGAR TEST	OHM (Z6)	2G OHM	SEE NOTE 1	UPRR TEST (SEE NOTE 11)		X	
TEAR STRENGTH	lb/in (Z7)	150	MIN	ASTM D624 DIE "C"			X
RHEOMETER	N/A	NONE	SEE NOTE 1	ASTM D2084	X		
SPECIFIC GRAVITY	SG	NONE	SEE NOTE 1	ASTM D297	X		

NOTES:
1. TEST RESULTS FROM A REPRESENTATIVE SAMPLE ALONG WITH RECOMMENDED TOLERANCES ARE TO BE SUBMITTED TO UPRR FOR REVIEW AND APPROVAL.
2. A SAMPLE OF THE PROPOSED MATERIAL IS TO BE SUBMITTED TO UPRR FOR REVIEW AND APPROVAL.
3. MATERIAL SPECIFICATIONS APPLY TO BOTH GAGE SIDE AND FIELD SIDE FLANGEWAY MATERIAL.
4. ANY CHANGES IN MATERIAL COMPOSITION OF THE APPROVED SAMPLE WILL REQUIRE PRIOR APPROVAL FROM UPRR.
5. MANUFACTURER SHALL BE ISO 9001-2000 OR AAR M-1003 CERTIFIED.
6. ALL PERSONELL CONDUCTING MATERIAL TESTING SHALL BE AALA CERTIFIED FOR CONDUCTING MECHANICAL TESTING. ANY ALTERNATIVE LAB ACCREDITION WILL REQUIRE PRIOR APPROVAL.
7. MANUFACTURER SHALL MAINTAIN RECORDS FOR 10 YEARS AND RECORDS ARE TO BE OPEN TO REVIEW BY AUTHORIZED UPRR REPRESENTATIVES.
8. MANUFACTURER TO WARRANTY MATERIALS FOR 10 YRS.
9. EACH BATCH SHALL BE MARKED WITH A UNIQUE IDENTIFIER THAT WILL PERMIT TRACKING OF THE MATERIAL. EACH SAMPLE SHALL BE MARKED INDICATING IT IS "UPRR APPROVED".
10. REFER TO: VOLUME RESISTIVITY - COMPRESSION TESTS FOR ANNUAL MATERIAL CERTIFICATION 12-20-05
11. REFER TO: INSULATION RESISTANCE TESTING OF CONCRETE CROSSING PANEL FLANGEWAY FILLER - BOTH CENTER AND FIELD PANELS 12-19-05

UNION PACIFIC RAILROAD ENGINEERING STANDARDS

GENERAL MANUFACTURING SPECIFICATIONS FOR ROAD CROSSINGS WITH CONCRETE PANELS

ADOPTED: SEP. 21, 2020
REVISED:
FILE NO.: 0308

STD DWG 0308 PAGE 2 OF 2

Copyright © 2020 by Union Pacific Railroad

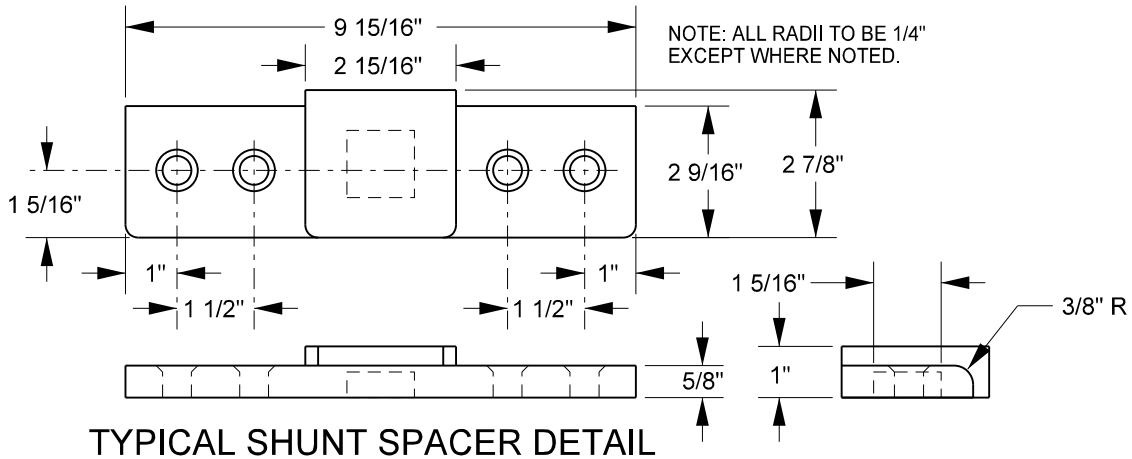

TYPICAL SHUNT SPACER DETAIL
(ALL PANELS)

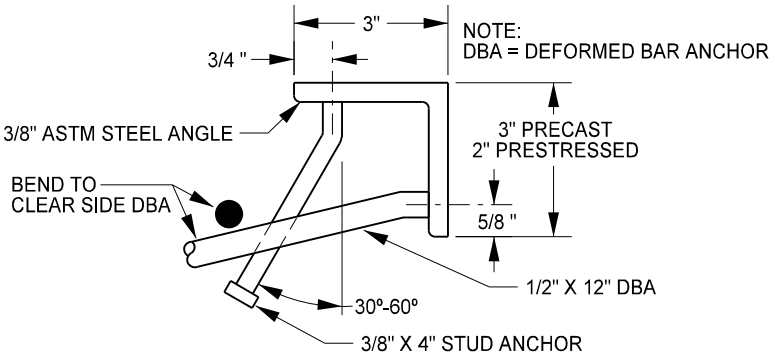

END FRAME DETAIL
(ALL PANELS)

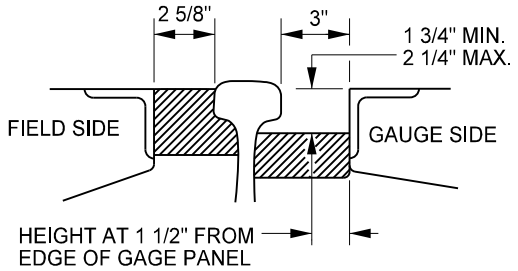

NOTE: VENDOR SHALL SUBMIT PREATTACHED FLANGEWAY FILLER DESIGN AND DETAILS FOR REVIEW AND APPROVAL PRIOR TO FABRICATION.

TYPICAL PREATTACHED FLANGEWAY FILLER
(ALL PANELS)

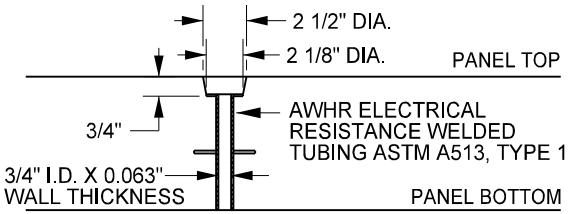

LAG HOLE DETAIL
(9W & 10W)

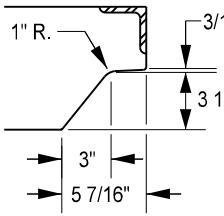

FIELD PANEL
(9W, 10W, & 10C)

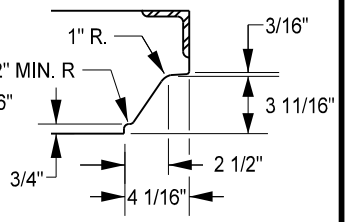

GAUGE PANEL
(9W, 10W, & 10C)

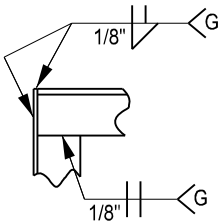

WELD DETAIL
(ALL PANELS)

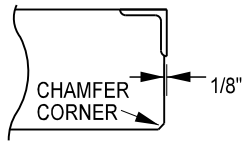

END DETAIL
(ALL PANELS)

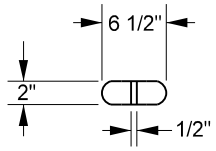

BLOCKOUT DEPTH = 3"

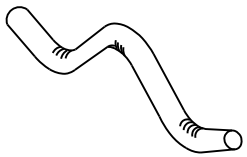

LIFTING INSERTS SHALL BE DESIGNED WITH A MINIMUM SAFETY FACTOR=4. PROFESSIONAL ENGINEER STAMPED AND SEALED DETAILS AND DESIGN CALCULATIONS MUST BE SUBMITTED FOR REVIEW AND APPROVAL PRIOR TO FABRICATION.

LIFTING INSERTS SHALL BE MECHANICALLY GALVANIZED OR SIMILARILY PROTECTED AGAINST CORROSION.

LIFTING DEVICES SHALL BE USABLE WITH BURKE OR DAYTON 5-TON CLUTCH SYSTEMS.

TYPICAL LIFTING DEVICE AND BLOCKOUT
(ALL PANELS)

UNION PACIFIC RAILROAD COMMON STANDARDS

TYPICAL DETAILS FOR CONCRETE PANELS

ADOPTED: SEP. 21, 2020
REVISED:
FILE NO.: 0330

STD DWG
0330

STD DWG 0330

Copyright © 2020 by Union Pacific Railroad

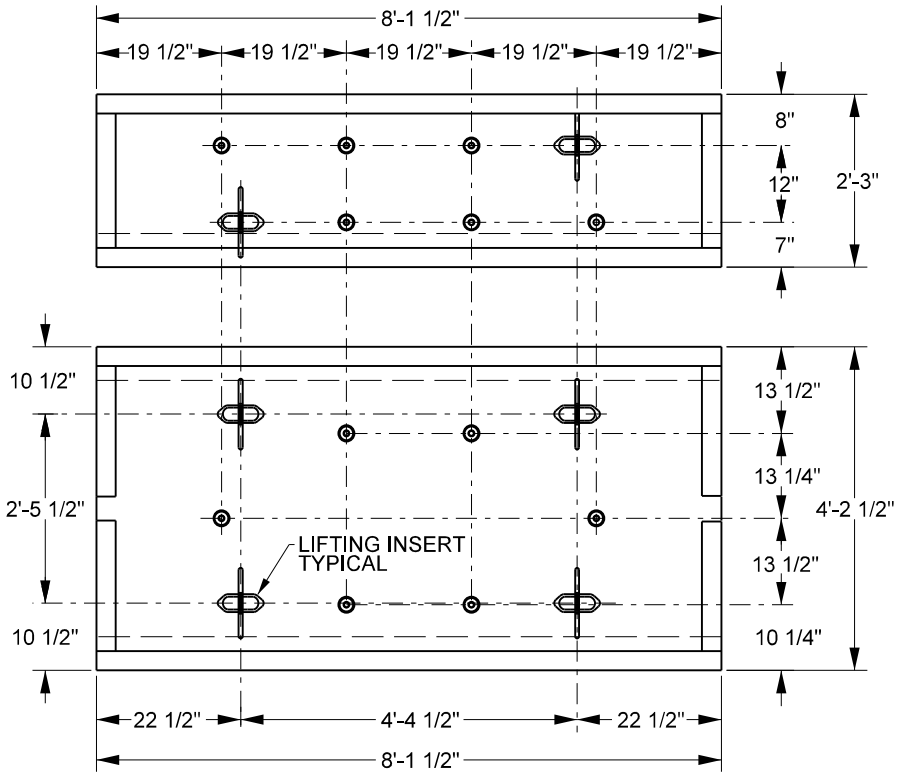

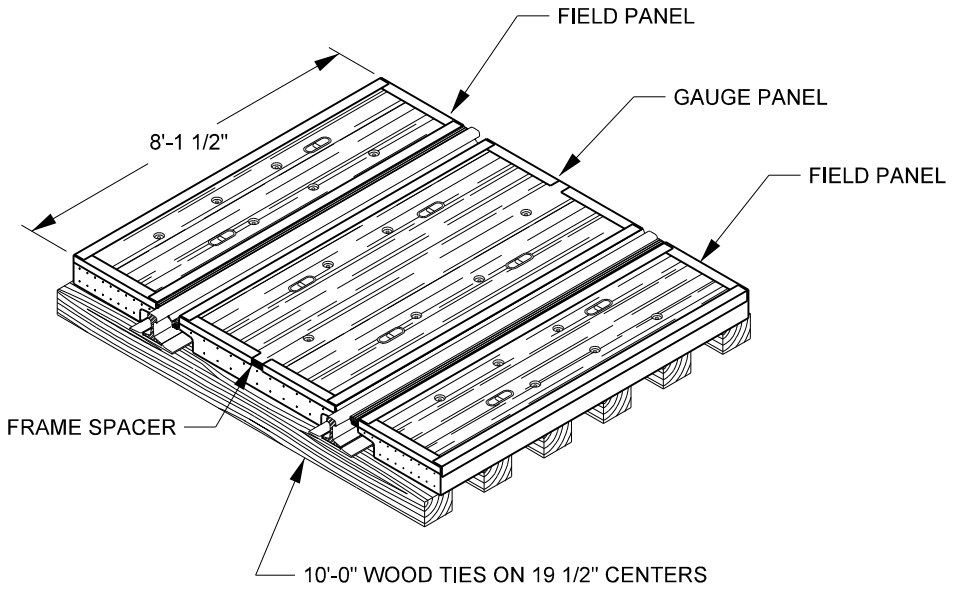

RAIL SIZE	PANEL HEIGHT	GAUGE PANEL WEIGHT	FIELD PANEL WEIGHT
115	7 1/8"	2850 LBS.	1550 LBS.
132-141	7 7/8"	3125 LBS.	1675 LBS.

NOTES:
1/4" RUBBER INTERFACE PAD TO BE PLACED BETWEEN PANEL AND TIES FOR 141 LB. RAIL SECTION. PAD TO BE NAILED TO TIES,

CROSSING TYPE - 10W

UNION PACIFIC RAILROAD COMMON STANDARDS

PRECAST CONCRETE PANELS FOR 10'-0" LONG WOOD TIES (10W)

ITEM NUMBERS	
133-141 LB. UPRR	115 LB. UPRR
540-1301	540-0202

ADOPTED: SEP. 21, 2020
REVISED:
FILE NO.: 0322

STD DWG 0322 PAGE 1 OF 2

STD DWG 0322 PAGE 1 OF 2

Copyright © 2020 by Union Pacific Railroad

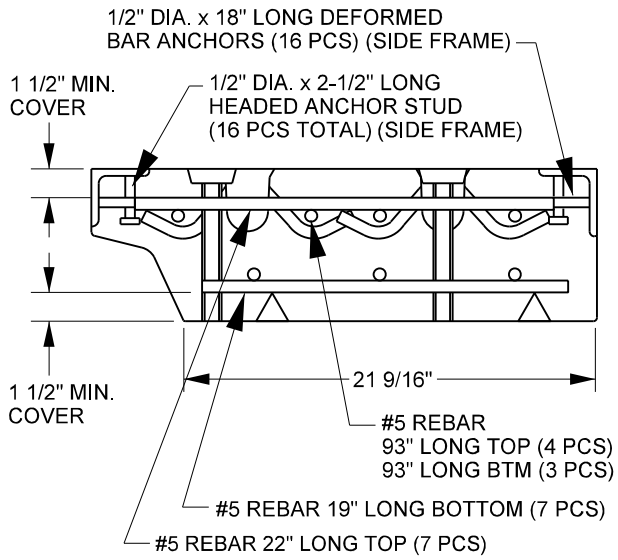

CROSS SECTION - FIELD PANEL

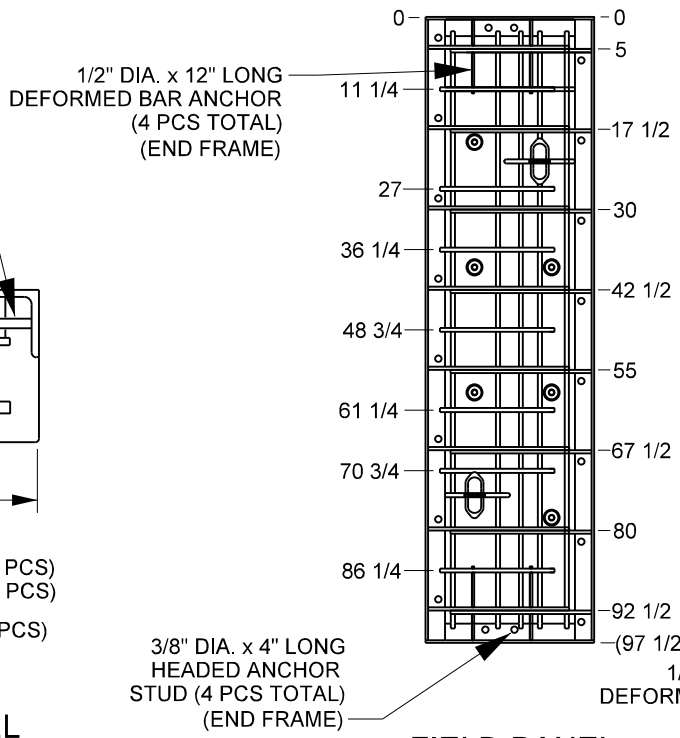

FIELD PANEL

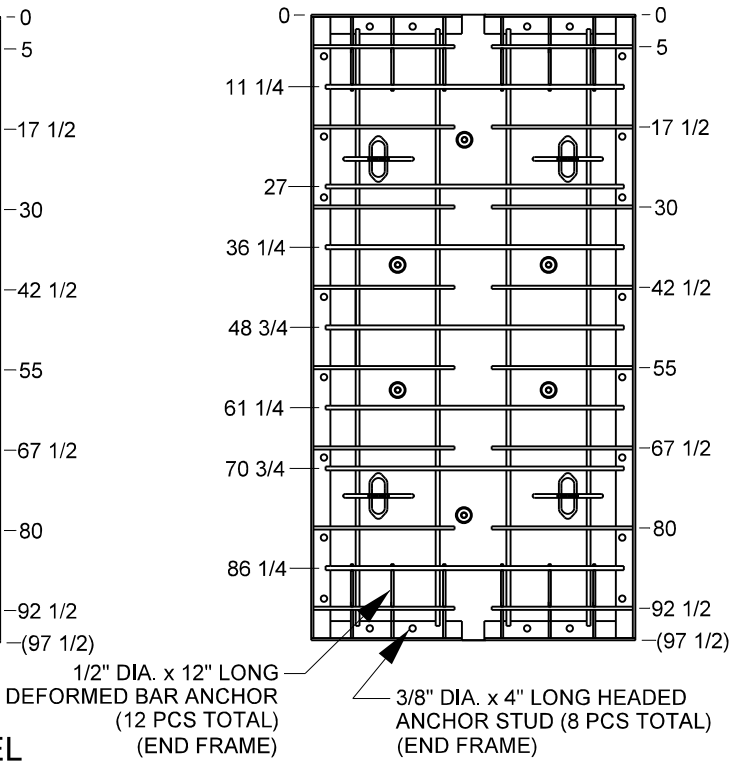

GAUGE PANEL

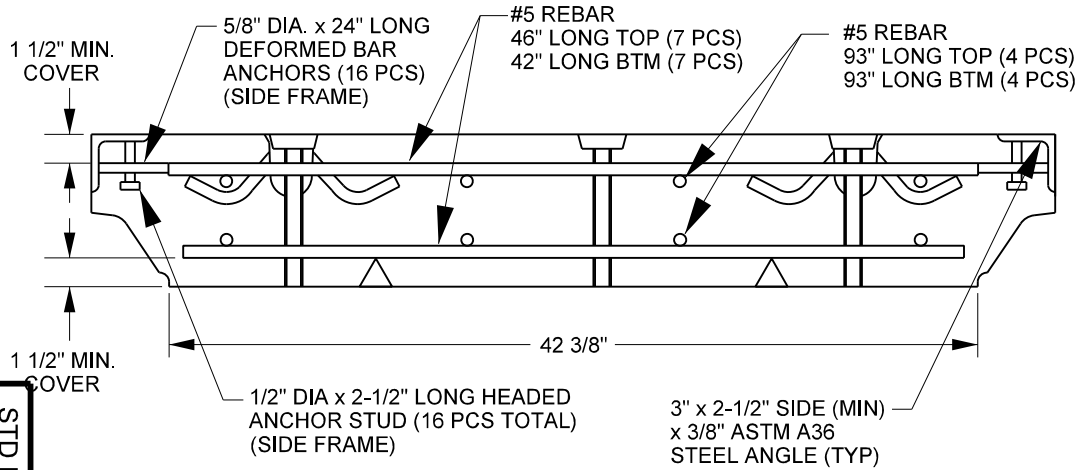

CROSS SECTION - GAUGE PANEL

NOTES:
CONCRETE COMPRESSIVE STRENGTH SHALL BE AS FOLLOWS:
@ 28DAYS = 6000 psi MINIMUM
@ SHIPMENT = 4000 psi MINIMUM
@ REMOVAL FROM FORMS = 2500 psi MINIMUM.

CROSSING TYPE - 10W

UNION PACIFIC RAILROAD COMMON STANDARDS

PRECAST CONCRETE PANELS FOR 10'-0" LONG WOOD TIES (10W)

UNION PACIFIC

ADOPTED: SEP. 21, 2020
REVISED:
FILE NO.: 0322

STD DWG
0322
PAGE 2 OF 2

STD DWG
0322
PAGE 2 OF 2

Copyright © 2020 by Union Pacific Railroad

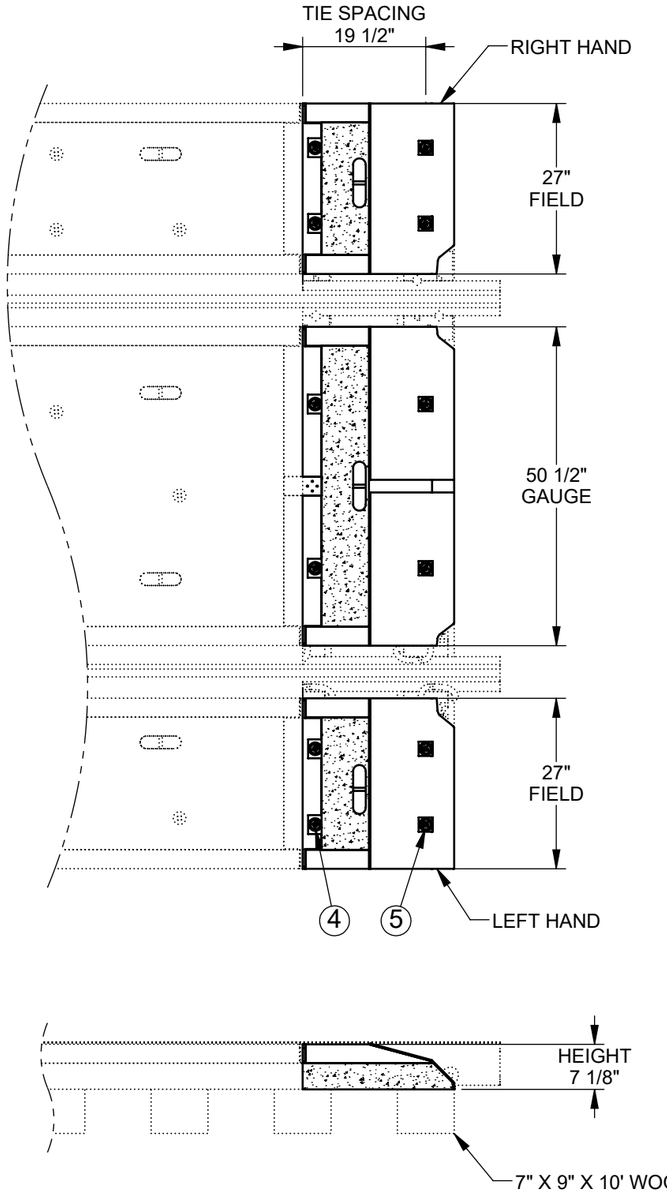

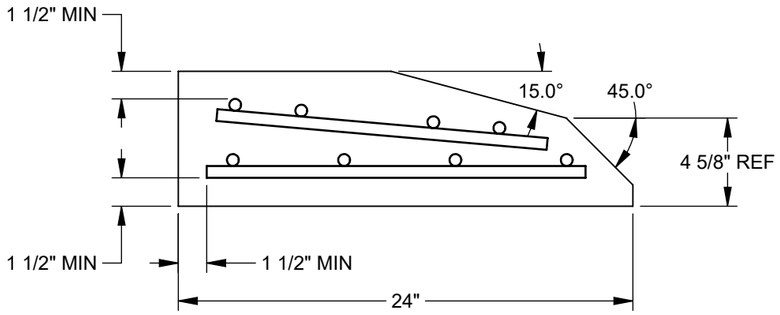

REINFORCEMENT

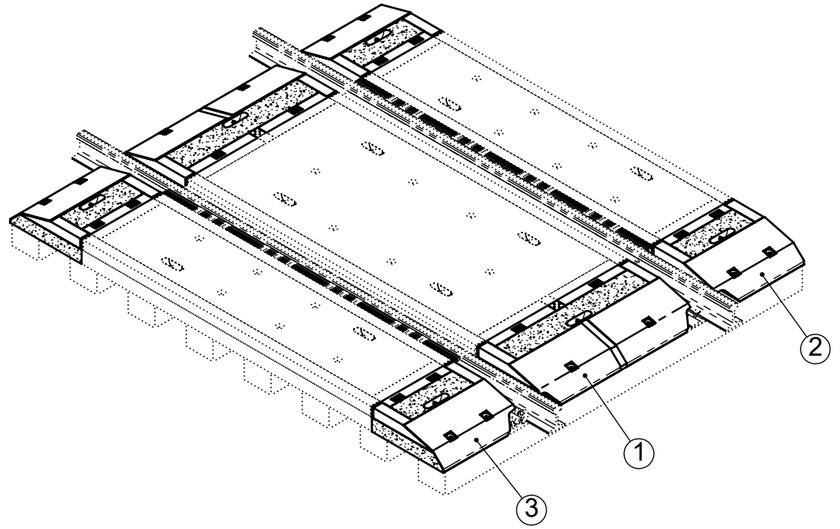

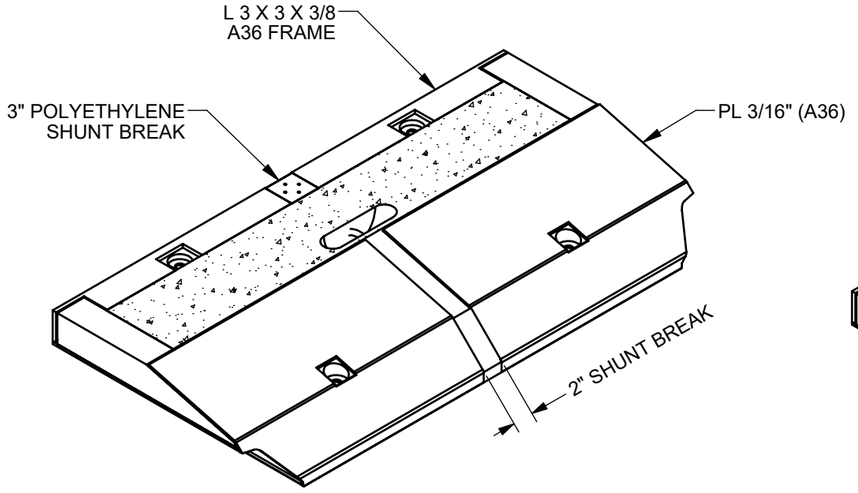

GAUGE END RAMP

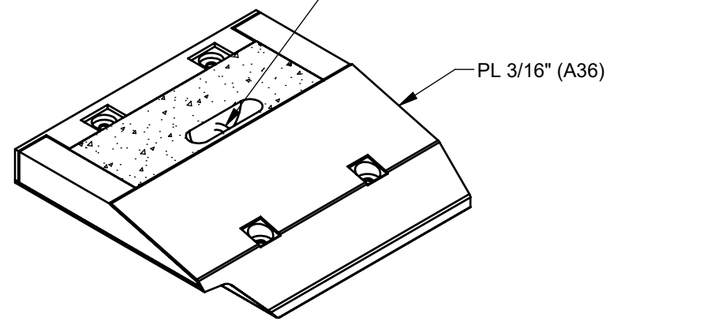

FIELD END RAMP

NOTES:
1. REINFORCEMENT ASTM A706 #5 WELDABLE REBAR.
2. CONCRETE COMPRESSING STRENGTH 6,000 PSI @ 28 DAY.
3. EACH LIFTING DEVICE SAFE WORKING LOAD 4,500 LBS.
4. TOTAL WEIGHT: 2913 LB PER SET (SET INCLUDES 2 GAUGE AND 4 FIELD RAMPS).

ITEM NO.	PART NUMBER	QTY.	DESCRIPTION	Material	Weight
1	1005990-21	2	GAUGE CONCRETE END RAMP, 115#		695
2	1005990-22	2	RH FIELD CONCRETE END RAMP, 115#		370
3	1005990-23	2	LH FIELD CONCRETE END RAMP, 115#		370
4		12	LAG SCREW Ø3/4" X 12"	Alloy Steel	1.1
5		12	LAG SCREW Ø3/4" X 7 1/2"	Alloy Steel	0.7

TOLERANCE: (UNLESS OTHERWISE SPECIFIED)
ALL LINEAR DIMENSIONS ARE ±1/8"
ALL ANGULAR DIMENSIONS ARE ±1 DEG
ALL HOLES ARE +1/16, -0"

REV.	DATE	DESCRIPTION	AUTHOR
00	12/14/2018	RELEASED	GGT

THIS DRAWING AND ALL INFORMATION ON IT IS THE PROPERTY OF OMEGA INDUSTRIES INC. IT IS CONFIDENTIAL AND IS GIVEN YOU FOR A LIMITED PURPOSE AND MUST BE RETURNED ON REQUEST.NEITHER THIS DRAWING NOR ANY PART OF IT NOR ANY INFORMATION CONCERNING IT MAY BE COPIED. EXHIBITED OR FURNISHED TO OTHERS NOR MAY PHOTOGRAPHS BE TAKEN OF ANY ARTICLE FABRICATED OR ASSEMBLED FROM THIS DRAWING WITHOUT CONSENT OF OMEGA INDUSTRIES INC.

OMEGA INDUSTRIES, INC.
7304 N.E. ST. JOHNS RD VANCOUVER, WA 98665

OMEGA INDUSTRIES, INC.
CONCRETE END RAMPS, 115#
FOR USE ON WOOD TIES, 19 1/2" SPACING

ENGINEER

DATE	SCALE	DRAWN BY:
12/13/2018	1:32	GGT

DRAWING NUMBER	SHEET	REVISION
1005990-20	1 OF 1	00

DATE PRINTED: December 14, 2018