CONFIDENTIAL AND PROPRIETARY PROPERTY OF ELLIOTT BAY DESIGN GROUP, LLC
MAY NOT BE USED FOR CONSTRUCTION OR PROVIDED TO ANY THIRD PARTIES WITHOUT PRIOR WRITTEN CONSENT.
© 2026 ELLIOTT BAY DESIGN GROUP.

SYMBOLS LIST

———	PIPE, SUPPLY
- - - - - - -	PIPE, RETURN
	PIPE DOWN
	PIPE UP
	PIPE PENETRATION, DECK/BHD
	REDUCER, CONCENTRIC
	CAMLOCK
	PIPE PLUG
	POSITIVE DISPLACEMENT PUMP
	VALVE, BALL
R	VALVE, BALL, REMOTE
	VALVE, STOP CHECK
	STRAINER, SIMPLEX
	DUPLEX FILTER
P	GAUGE, PRESSURE
VP	GAUGE, VACUUM/PRESSURE
FM	FLOW METER
N.O. / N.C.	NORMALLY OPEN / NORMALLY CLOSED
	FLEXIBLE CONNECTION
	VALVE, SWING CHECK

MATERIAL SCHEDULE

SERVICE	SIZE	PIPE	TAKEDOWN JOINTS			VALVES		FITTINGS	FLEXIBLE CONNECTIONS
			MATERIAL	GASKETS	BOLTING	BODY	TRIM		
FUEL OIL SERVICE MAWP: 15 PSIG MAX TEMP: 115°F FUEL OIL TRANSFER MAWP: 15 PSIG MAX TEMP: 115°F	ALL	CARBON STEEL ASTM A53 OR A106, GRADE B, SEAMLESS, ANSI B36.10, SCH 40	UNION CARBON STEEL ASTM A105 CLASS 3000 ANSI B16.11 SOCKET WELD OR VIEGA MEGAPRESS WITH FKM SEALS TO ASTM F3226	-	-	BALL: CARBON STEEL ASTM A216 GR WCB SOCKET WELD 3-PIECE FULL PORT 800# SWING CHECK: CARBON STEEL ASTM A105 SOCKET WELD ASTM B15.10 800# GATE: CARBON STEEL, ASTM A216 OR A105 ANSI B16.34, SOCKET WELD OR THREADED	BALL: CHROME PLATED CARBON STEEL BALL RPTFE SEATS GATE: SS 316 TRIM, CARBON STEEL SEAT	CARBON STEEL ASTM A105 ANSI B16.11 3000# SOCKET WELD OR VIEGA MEGAPRESS WITH FKM SEALS TO ASTM F3226	AEROQUIP FC300 AQP, AEROQUIP FC234, OR EQUAL SAE J1942 COMPLIANT HOSE SEE NOTE 7
						SEE NOTES 17 AND 19.			

EQUIPMENT & PUMP LIST

QTY	SERVICE	TYPE	MODEL	CAPACITY	MATERIALS	DRIVE	REMARKS
2	FUEL OIL TRANSFER PUMP	ROPER	2AM16	25-30 GPM @ 50 TDH	CAST IRON	2 HP, 1800 RPM, 208V/3Ø/60Hz	RELIEF VALVE SET TO 15 PSI
2	FUEL OIL STRAINER 2"	SIMPLEX	EATON MODEL 72 OR EQUAL	-	-	-	40 MESH SS BASKET
2	MAIN ENGINE FILTER	DUPLEX	RACOR 751000 MAXM	6 GPM 10 MICRON	SS BODY & BASKET	-	-
2	GENERATOR FILTER	DUPLEX	RACOR 75500 MAXM	3 GPM 10 MINCRON	SS BODY & BASKET	-	-
1	BOILER FILTER	GAR-BER	W11BVRK	10 GPH 10 MICRON	-	-	INCLUDES PRESSURE GAUGE
1	SOLIDS-RETAINING CENTRIFUGAL SEPARATOR	ALFA LAVAL	MAB 103	6.16 GPM	-	0.75 kW	INCLUDE MOTOR, STARTER, AND HEATER

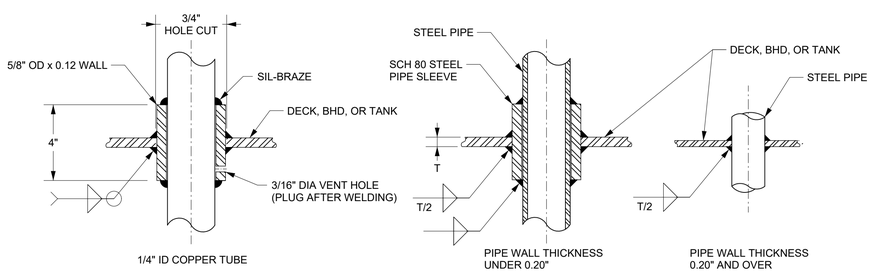

DETAIL 1-4A
TYP DECK/BHD PENETRATION

GENERAL NOTES

11. DO NOT ROUTE PIPING CONTAINING FUEL OIL NEAR ANY ELECTRICAL DEVICES OR EQUIPMENT. DO NOT LOCATE TAKEDOWN JOINTS AROUND, NEAR, OR OVER ELECTRICAL EQUIPMENT. ROUTE ALL FUEL OIL PIPING AT LEAST 18 INCHES AWAY FROM ANY SURFACE THAT NORMALLY HAS A OPERATING TEMPERATURE OF 450°F OR GREATER.

12. FUEL OIL SUCTION BELLMOUTH AREA SHALL BE AT LEAST 1 1/2 TIMES THE SUCTION PIPE INTERNAL AREA.

13. DRIP PANS WITH UP-TURNED, SEALED, AND FLANGED EDGES SHALL BE PROVIDED BENEATH ALL FILTERS, PUMPS, STRAINERS, AND ANY OTHER EQUIPMENT THAT CONTAINS OIL AND REQUIRES PERIODIC MAINTENANCE. EACH DRIP PAN SHALL BE FITTED WITH A LOW POINT DRAIN VALVE.

14. ALL VALVES LOCATED BELOW THE FLOOR PLATES SHALL BE PROVIDED WITH REACH RODS UNLESS VALVES ARE EASILY ACCESSIBLE WHEN KNEELING ON DECK PLATES. ALL VALVES SHALL BE PROVIDED WITH VISUAL CLOSURE STATUS.

15. PIPE THREAD SEALING TAPE, GALVANIZED PIPE, OR FITTINGS SHALL NOT BE USED.

16. PIPE BENDS MAY BE USED IN LIEU OF ELBOWS WHERE PRACTICABLE. BENDS SHALL HAVE A BEND RADIUS OF FIVE TIMES NOMINAL DIAMETER WHEREVER PRACTICAL, WITH A MINIMUM RADIUS OF THREE TIMES NOMINAL DIAMETER.

17. TANK SHUT-OFF VALVES SHALL POSITIVE SHUTOFF PER 46 CFR 56.20-15 AND SHALL HAVE FIRE-SAFE METALLIC SEATS. TANK ISOLATION VALVES SHALL BE CAPABLE OF REMOTE OPERATION FROM THE MAIN DECK.

18. THE MAIN FUEL OIL TRANSFER PUMP SHALL BE FITTED WITH REMOTE SHUTDOWNS LOCATED OUTSIDE OF THE ENGINE ROOM.

19. VALVES OTHER THAN TANK SHUT-OFF VALVES SHALL BE CATEGORY A VALVES.

20. FUEL TANKS SHALL BE FITTED WITH LEVEL INDICATORS TO PROVIDE INDICATION THROUGH THE GREATEST RANGE OF TANK LEVEL AS PRACTICABLE. THE LEVEL INDICATOR SHALL BE FITTED WITH LEVEL SENSORS THAT INTERFACE WITH THE TANK MONITORING SYSTEM AND ARE CONFIGURE TO PROVIDE CONTINUOUS LEVEL INDICATION, HIGH AND LOW LEVEL ALARMS. SEE REF 1.

21. FUEL OIL SUPPLY AND RETURN DOWN TUBES ARE TO TERMINATE AT A HEIGHT OF 6" FROM THE TANK BOTTOM.

22. 180° BALL, T-PORT VALVES SHALL BE FITTED TO REDIRECT FUEL RETURN TO PORT, STARBOARD, OR PORT AND STARBOARD FUEL OIL DAY TANKS WITHOUT SHUTOFF CAPABILITIES. AT NO POINT IN VALVE OPERATION SHALL FLOW BE STOPPED.

23. FUEL OIL SERVICE ISOLATION VALVES FOR THE MAIN ENGINES, GENERATORS, AND BOILER SHALL BE OPERABLE FROM OUTSIDE THEIR INSTALLATED SPACE AND THAT ARE NOT RENDERED INACCESSIBLE DUE TO A FIRE AT THE EQUIPMENT.

24. FUEL OIL TRANSFER AND RETURN LINES SHALL PENETRATE NEAR THE TOP OF THE TANK AT A POSITION THAT IS NOT SUBJECT TO STATIC HEAD.

25. THE FUEL OIL TRANSFER PUMP SHALL BE FITTED WITH REMOTE SHUTDOWNS LOCATED OUTSIDE OF THE ENGINE ROOM.

26. IN LINE CHECK VALVES SHALL REDUCE STATIC HEAD ON STOPPED ENGINES PER CATERPILLAR REQUIREMENTS.

27. THE BOILER SHALL BE INSTALLED IN ACCORDANCE WITH MANUFACTURER'S REQUIREMENTS.

28. LEVEL GAUGES FOR THE FORWARD FUEL STORAGE TANKS SHALL BE MOUNTED ON THE AFT SIDE OF BULKHEAD 27 IN THE ENGINE ROOM.

REVISION HISTORY

REV	ZONE	DESCRIPTION	DWN	DATE	APVD

GENERAL NOTES

GENERAL
1. THIS DRAWING PROVIDES CONTRACT GUIDANCE FOR THE CONSTRUCTION OF A NEW 91'-7" x 27'-6" x 12'-2" PATROL VESSEL FOR THE ALASKA WILDLIFE TROOPERS ALONG WITH THE CONTRACT SPECIFICATION (REF 1). THIS DRAWING SHALL NOT BE USED FOR THE CONSTRUCTION OF ADDITIONAL VESSELS.

REGULATORY STANDARD
2. WHILE THE VESSEL IS UNINSPECTED BY USCG, ALL MATERIALS AND WORKMANSHIP SHALL BE IN ACCORDANCE WITH 46 CFR SUBCHAPTER T. STEEL STRUCTURE SHALL BE CONSTRUCTED TO ABS RULES FOR THE CONSTRUCTION AND CLASSIFICATION OF STEEL VESSELS UNDER 61 METERS (200 FEET) IN LENGTH. ALUMINUM STRUCTURE SHALL BE CONSTRUCTED IN ACCORDANCE WITH CHAPTER 5 OF THE ABS RULES FOR MATERIALS AND WELDING (PART 2).

DETAILS
3. THIS DRAWING IS DIAGRAMMATIC AND DOES NOT REPRESENT A COMPLETE DETAILED DESIGN. EQUIPMENT LAYOUT IN A GIVEN AREA IS APPROXIMATE. THE CONTRACTOR SHALL DEVELOP A SHOP DRAWING THAT PROVIDES A FULLY FUNCTIONAL ARRANGEMENT SUITABLE FOR INSTALLATION, TAKING INTO ACCOUNT ALL NECESSARY SYSTEM INTERFACES AND INTERFERENCES. DIMENSIONS SHALL BE VERIFIED FROM THE SHIP AND MANUFACTURER'S CERTIFIED DRAWINGS AS APPROPRIATE.

4. PIPING SHALL BE RUN AS DIRECTLY AS PRACTICABLE WITH A MINIMUM NUMBER OF BENDS AND FITTINGS.

5. TAKEDOWN JOINTS SHALL BE PROVIDED AT INTERVALS WHICH ALLOW DISASSEMBLY AND REMOVAL OF PIPING AND EQUIPMENT WITHOUT REQUIRING REMOVAL OR MODIFICATIONS OF PERMANENT STRUCTURE.

6. ALL PIPING SHALL BE ADEQUATELY SUPPORTED BY SPLIT CAP PIPE HANGERS IN ACCORDANCE WITH ASTM F708. HANGERS SHALL BE ATTACHED TO THE PIPE WITH BOLTED CLAMPS AND WELDED TO THE SHIP'S STRUCTURE.

7. WHERE PIPES PENETRATE TANK BOUNDARIES, BULKHEADS, OR DECKS HEAVY WEIGHT SPOOL PIECES OR REINFORCING PENETRATION FITTINGS SHALL BE USED. SEE DETAIL 1-4A.

8. FLEXIBLE HOSES SECTIONS BETWEEN THE ENGINE AND VESSEL PIPING SHALL BE 37" SAE FLARE SWIVEL ON BOTH ENDS. FLEXIBLE HOSE SHALL BE FLAME RESISTANT IN ACCORDANCE WITH 46 CFR 56.60-25. HOSE ASSEMBLIES SHALL NOT BE LESS THAN 9" IN LENGTH NOR MORE THAN 24" IN LENGTH.

9. PUMP PRESSURE GAUGES SHALL BE MOUNTED NEAR THEIR RESPECTIVE PUMP. GAUGES SHALL BE SURFACE MOUNTED ON A GAUGE BOARD CONFORMING TO ASTM F707.

10. PIPING ASSEMBLIES AND MATERIALS FOR GAUGES AND INSTRUMENTS SHALL BE IN ACCORDANCE WITH ASTM F721. TUBING AND FITTINGS SHALL BE 316 STAINLESS STEEL. ROOT VALVES SHALL BE BALL TYPE. ROOT AND GAUGE VALVES SHALL BE MANUFACTURED FROM 316 STAINLESS STEEL.

REFERENCES

1. 24065-200-832-1 SPECIFICATION
2. 24065-200-506-1 FILLS, VENTS, AND SOUNDS

STATE OF ALASKA
49TH
Sarah Nichols
SARAH E. NICHOLS
ME 146884
REGISTERED PROFESSIONAL ENGINEER
9/25/2026

ELLIOTT BAY DESIGN GROUP

CLIENT	ALASKA WILDLIFE TROOPER ANCHORAGE, AK	DWN	SEN
		CHK	PTE
		APVD	SEN
PROJECT	Large Class Enforcement Vessel	DATE	09/25/26
TITLE	FUEL PIPING DIAGRAM		
SIZE	D	DWG NO.	24065-200-541-0
REV	-	SHEET	1 OF 2
		SCALE	NTS

9/25/2026 8:21:13

CONFIDENTIAL AND PROPRIETARY PROPERTY OF
ELLIOTT BAY DESIGN GROUP, LLC
MAY NOT BE USED FOR CONSTRUCTION OR PROVIDED TO
ANY THIRD PARTIES WITHOUT PRIOR WRITTEN CONSENT.
© 2026 ELLIOTT BAY DESIGN GROUP.

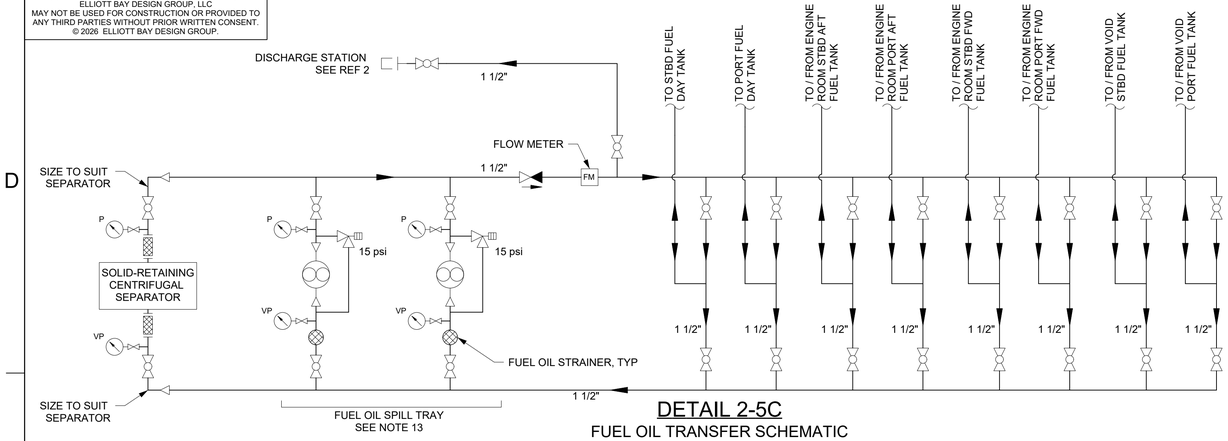

DETAIL 2-5C
FUEL OIL TRANSFER SCHEMATIC
NTS

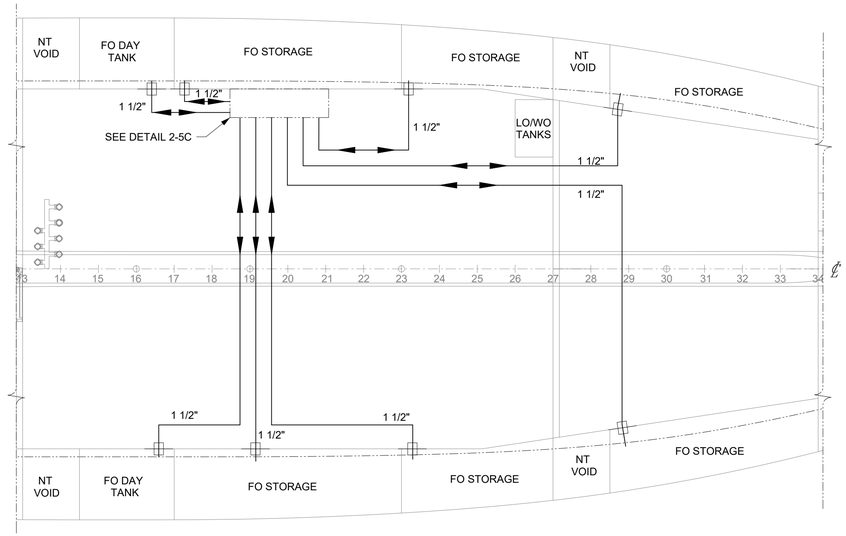

PLAN 2-2C
FUEL OIL TRANSFER SYSTEM LAYOUT
SCALE: 1/4"=1'-0"

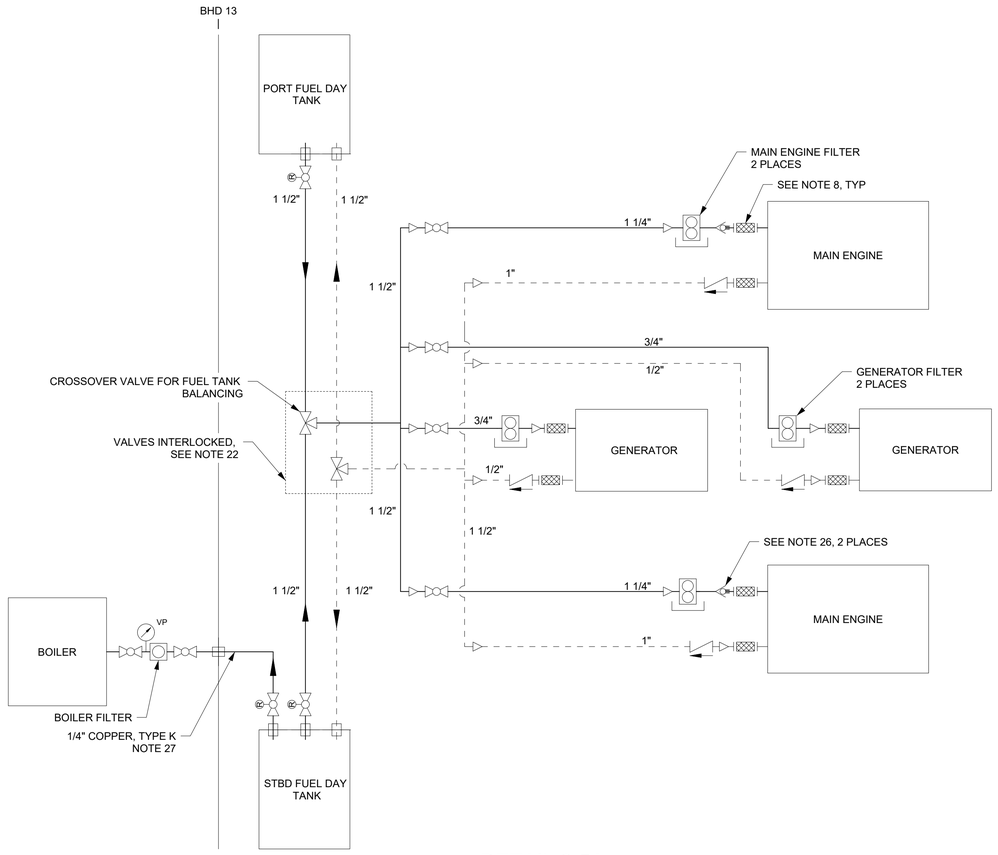

DETAIL 2-5A
FUEL OIL SERVICE SCHEMATIC
NTS

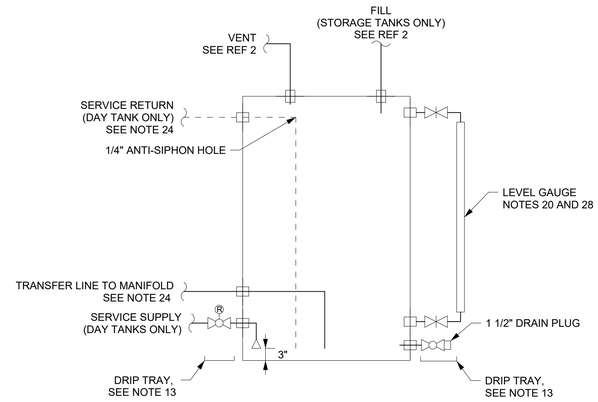

DIAGRAM 2-2A
TYP FUEL OIL TANK
NTS

STATE OF ALASKA
49TH
SARAH E. NICHOLS
ME 146884
REGISTERED PROFESSIONAL ENGINEER
9/25/2026

9/25/2026 6:21:13

SIZE	DWG NO.	REV	SHEET 2 OF 2
D	24065-200-541-0	-	SCALE AS NOTED