CONFIDENTIAL AND PROPRIETARY PROPERTY OF ELLIOTT BAY DESIGN GROUP, LLC
MAY NOT BE USED FOR CONSTRUCTION OR PROVIDED TO ANY THIRD PARTIES WITHOUT PRIOR WRITTEN CONSENT.
© 2026 ELLIOTT BAY DESIGN GROUP.

SYMBOLS LIST

———	PIPE, FILL/DISCHARGE
- - - - - - - -	PIPE, VENT
	PIPE DOWN
	PIPE UP
	VERTICAL PIPE - EXTENDS UP & DOWN
	MATERIAL TRANSITION
	OVERBOARD DISCHARGE
	VENT TERMINAL WITH BALL CHECK
	VENT TERMINAL
	FLANGE
	VALVE, SWING CHECK
	VALVE, BALL

MATERIAL SCHEDULE

SERVICE	SIZE	PIPE	TAKEDOWN JOINTS			VALVES		FITTINGS	FLEXIBLE CONNECTIONS
			MATERIAL	GASKETS	BOLTING	BODY	TRIM		
POTABLE WATER FILL & VENT, (IN HOLD) BLACK WATER TANK DISCHARGE BLACK WATER TANK VENT (IN HOLD & WEATHER) MAWP: 50 PSIG MAX TEMP: 120°F	2" & BELOW	CARBON STEEL, ASTM A53 GR B, ANSI B36.10 GALVANIZED	UNIONS: GROUND JOINT, CARBON STEEL, ASTM A105, 3000# SOCKET WELD OR THREADED	INORGANIC FIBER WITH NITRILE BINDER, GARLOCK 5500, OR EQUAL	BOLTS: CARBON STEEL ASTM A307 GRADE B ANSI B18.2.1 NUTS: CARBON STEEL ASTM A563 GRADE A ANSI B18.2.2	BALL: CARBON STEEL, ASTM A216 GR WCB, THREADED OR SW, 1500 PSI CHECK: CARBON STEEL, ASTM A216 GR WCB, 150#, FLANGED	BALL: CHROME PLATED BALL, PTFE SEATS & SEALS CHECK: SS TRIM RENEWABLE METALLIC DISC AND SEAT	CARBON STEEL, ASTM A234 GR WPB, ANSI B16.9 SCH 40, GALVANIZED 2" AND BELOW - SOCKET WELD 2 1/2" AND ABOVE - BUTTWELD SEE GN 31	-
	2 1/2" & ABOVE		FLANGES: CARBON STEEL, ASTM A105, ANSI B16.5 150# SLIP-ON OR WELD NECK						
BLACK WATER TANK VENT (IN ALUMINUM HOUSE) MAWP: 50 PSIG MAX TEMP: 120°F	ALL	CPVC SCH 80 ASTM D1784 ASTM F441 NSF PW	SOCKET FLANGE, CPVC ASTM F439 ANSI B16.5, 150#	EPDM RUBBER NSF 61 ASTM D1330 FULL FACE		-	-	SOCKET UNION CPVC ASTM F439	-
POTABLE WATER VENT AND FILL (IN WEATHER) MAWP: 50 PSIG MAX TEMP: 120°F	ALL	STAINLESS STEEL ASTM A312 TP316I SEAMLESS ANSI B36.10 SCH 40	FLANGE STAINLESS STEEL ASTM A182 TYPE 316 ANSI B16.5, 150#, SLIP-ON OR WELD NECK UNION STAINLESS STEEL ASTM A182 TYPE 316 ANSI B16.11 3000#	GARLOCK BLUE GARD 3300 OR EQUAL	BOLTS: STAINLESS STEEL ASTM A193 GRADE B8M ANSI B18.2.1 NUTS: STAINLESS STEEL ASTM A194 GRADE 8M ANSI B18.2.2	-	-	STAINLESS STEEL ASTM A182, TYPE 316 ANSI B16.9, BUTT WELD, LONG RADIUS	-
F.O., L.O., WASTE OIL, OILY BILGE, HYDRAULIC OIL, VOIDS, FORE PEAK SEA CHEST VENT (IN WEATHER) MAWP: 50 PSIG MAX TEMP: 120°F	ALL	CARBON STEEL ASTM A53 OR A106, GRADE B, SEAMLESS, ANSI B36.10, SCH 40	FLANGE CARBON STEEL, ASTM A105, ANSI B16.5, 150#, SLIP-ON OR WELD NECK SEE GN 31	INORGANIC FIBER WITH NITRILE BINDER, GARLOCK STYLE IFG 5500 OR EQUAL		BALL: CARBON STEEL, ASTM A216 GR WCB, THREADED OR SW, 1500 PSI	BALL: CHROME PLATED BALL, PTFE SEATS & SEALS	CARBON STEEL, ASTM A234 GRADE WPB, ANSI B16.9, SCH 40, BUTT WELD, LONG RADIUS SEE GN 31	-
SEA CHEST VENT	ALL	CU-NI 90/10 ASTM B466, MIL-T-16420, CLASS 200	FLANGE CU/NI 90/10 OR BRONZE, ASTM B369, ANSI B16.5, SLIP-ON OR WELD NECK, 150-#			-	-	CU-NI 90/10 OR BRONZE, ASTM B61 OR B62, BUTT WELD	-

TABLE 1-4C: FILLS, VENTS & SOUNDING TUBES

SPACE	QTY	FILL/PUMP-OFF			VENT		SOUNDING TUBE	
		SIZE	TYPE (GN 11)	VALVE	SIZE	VALVE	SIZE	VALVE
FRESH WATER TANK	2	1 1/2"	MALE CAMLOCK W/CAP	BALL	1 1/2"	BALLCHECK	NONE	-
BLACK WATER TANK	1	1 1/2"	MALE CAMLOCK W/CAP	BALL	3"	BALLCHECK	NONE	-
FUEL OIL STORAGE TANK	6	2"	MALE CAMLOCK W/CAP	BALL	2 1/2"	BALLCHECK	1 1/2"	FLUSH
FUEL OIL DAY TANK	2	-	-	-	2 1/2"	BALLCHECK	1 1/2"	FLUSH
HYDRAULIC OIL STORAGE TANK	1	1"	MALE CAMLOCK W/CAP	-	1 1/2"	BALLCHECK	1 1/2"	SELF-CLOSING VALVE
WASTE OIL TANK	1	1"	MALE CAMLOCK W/CAP	BALL	1 1/2"	BALLCHECK	1 1/2"	SELF-CLOSING VALVE
LUBE OIL STORAGE TANK	1	1 1/2"	MALE CAMLOCK W/CAP	BALL	1 1/2"	BALLCHECK	1 1/2"	FLUSH
SEA CHEST	1	-	-	-	2"	NONE	NONE	-
FORE PEAK	1	-	-	-	2 1/2"	NONE	1 1/2"	FLUSH
VOID / STEERING GEAR RM / THRUSTER AND BOSUN RM	1	-	-	-	SPACE VENTILATION REQUIRED SEE REF 1		NONE	-

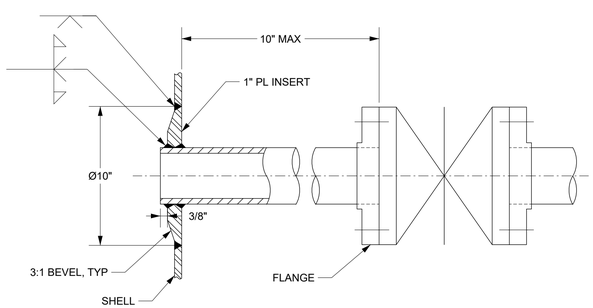

DETAIL 1-4A
OVERBOARD DISCHARGE

GENERAL NOTES CONT.

10. PIPE BENDS SHALL BE USED IN LIEU OF ELBOWS WHERE PRACTICABLE. BEND RADII FOR VENT AND OVERFLOWS SHALL BE 5 TIMES NOMINAL PIPE DIAMETER.

11. TANK FILL AND DISCHARGE STAND PIPES SHALL BE FITTED WITH CAMLOCK FITTINGS WITH LOCKABLE DUST CAPS. OWNER SHALL HAVE FINAL DETERMINATION IF CAMLOCK FITTING IS MALE OR FEMALE.

12. SOUNDING TUBES THAT TERMINATE AT THE FREEBOARD DECK SHALL HAVE FLUSH SOUNDING TUBE CAPS. STAINLESS STEEL COMMERCIAL WELD-IN TYPE (NOT A PIPE COUPLING) WITH BRONZE PLUG. EACH FLUSH SOUNDING TUBE SHALL HAVE THE TANK NAME ENGRAVED IN THE STAINLESS STEEL SOCKET AND CAP. SOUNDING TUBES THAT TERMINATE BELOW THE FREEBOARD DECK SHALL BE FITTED WITH A SELF-CLOSING GATE VALVE. EACH VALVE SHALL HAVE A LABEL INDICATING THE TANK SERVED.

13. ANY INACCESSIBLE SPACE SHALL BE FITTED WITH A SOUNDING TUBE. SOUNDING TUBES SHALL BE AS VERTICAL AS PRACTICAL AND SHALL TERMINATE AS CLOSE AS POSSIBLE TO THE DEEPEST POINT OF THE TANK OR VOID. SOUNDING TUBES SHALL TERMINATE AT OR ABOVE THE MAIN DECK.

14. SOUNDING TUBE TERMINALS SHALL BE LOCATED IN EASILY ACCESSIBLE LOCATIONS.

15. VENT TERMINALS SHALL BE INVERTED BALL CHECK TYPE WITH PROTECTIVE MESH SCREEN, WAGER 1700 SERIES, OR EQUAL.

16. VENT TERMINALS FOR FUEL OIL, LUBE OIL, HYDRAULIC OIL, AND WASTE OIL SHALL BE FURNISHED WITH SS FLAME SCREENS.

17. VENT FOR FRESH WATER TANKS SHALL BE FITTED WITH INSECT SCREENS.

19. TRANSITIONS TO CPVC PIPING SHALL MAINTAIN THE FIRE INTEGRITY OF THE BOUNDARY. SEE DETAIL 4-4C

20. WHERE STEEL PIPES PENETRATE TANK BOUNDARIES, BULKHEADS, OR DECKS HEAVY SPOOL PIECES OR AN ALTERNATE USCG APPROVED PENETRATION FITTING SHALL BE USED. SEE DETAIL 4-5C.

21. CPVC PIPE AND FITTINGS SHALL HAVE A USCG CERTIFICATE OF APPROVAL THAT STATES THAT CPVC PIPE AND FITTINGS MEET LOW FLAME SPREAD AND TOXICITY REQUIREMENTS OF THE FTP CODE ANNEX 1, PARTS 2 AND 5. INSTALL PIPING IN ACCORDANCE WITH MANUFACTURER'S GUIDELINES.

22. SEA CHEST VENT SHALL BE ROUTED TO THE MAIN DECK, AS FAR OUTBOARD AS POSSIBLE.

23. FUEL OIL TANK VENTS SHALL PENETRATE THE TANK AS HIGH AS PRACTICABLE WHILE MAINTAINING SLOPE BACK TO THE TANK.

24. VENTS FOR THE LUBE OIL, WASTE OIL, AND HYDRAULIC OIL TANK SHALL TERMINATE IN THE OVERHEAD OF THE ENGINE ROOM. VENTS SHALL BE ARRANGED TO PREVENT OVERFLOW ON TO ELECTRICAL OR HIGH TEMPERATURE EQUIPMENT.

25. ANY INACCESSIBLE SPACE SHALL BE FITTED WITH A SOUNDING TUBE.

26. PIPING SYSTEM SHALL BE CLEANED, FLUSHED, AND TESTED IN ACCORDANCE WITH REFERENCE 1.

27. MATERIAL TRANSITIONS FROM STEEL TO COPPER NICKEL SHALL BE ACCOMPLISHED VIA FLANGED JOINTS, THE JOINTS SHALL BE FITTED WITH GALVANIC ISOLATION KITS TO PREVENT DIRECT METAL TO METAL CONTACT.

28. ALL GASKETS ARE TO BE DESIGNED IN ACCORDANCE WITH 46 CFR 56.60-1. CONTRACTOR TO PROVIDE DOCUMENTATION.

29. OVERBOARD PENETRATIONS SHALL BE LOCATED AS FAR ABOVE BASELINE AS POSSIBLE WHILE STILL BEING UNDER THE GUARDS.

30. FUEL FILL CONNECTIONS SHALL BE INSTALLED WITH 26" VERTICAL CLEARANCE ABOVE THE CAMLOCK.

31. APPROVED MECHANICALLY ATTACHED FITTING SYSTEMS MAY BE SUBSTITUTED FOR WELDED FITTINGS. FITTINGS SHALL BE USCG APPROVED AND USED IN ACCORDANCE WITH REGULATORY REQUIREMETNS AND MANUFACTURER'S RECOMMENDATIONS.

REVISION HISTORY

REV	ZONE	DESCRIPTION	DWN	DATE	APVD

GENERAL NOTES

GENERAL
1. THIS DRAWING PROVIDES CONTRACT GUIDANCE FOR THE CONSTRUCTION OF A NEW 91'-7" x 27'-6" x 12'-2" PATROL VESSEL FOR THE ALASKA WILDLIFE TROOPERS ALONG WITH THE CONTRACT SPECIFICATION (REF 1). THIS DRAWING SHALL NOT BE USED FOR THE CONSTRUCTION OF ADDITIONAL VESSELS.

REGULATORY STANDARD
2. WHILE THE VESSEL IS UNINSPECTED BY USCG, ALL MATERIALS AND WORKMANSHIP SHALL BE IN ACCORDANCE WITH 46 CFR SUBCHAPTER T. STEEL STRUCTURE SHALL BE CONSTRUCTED TO ABS RULES FOR THE CONSTRUCTION AND CLASSIFICATION OF STEEL VESSELS UNDER 61 METERS (200 FEET) IN LENGTH. ALUMINUM STRUCTURE SHALL BE CONSTRUCTED IN ACCORDANCE WITH CHAPTER 5 OF THE ABS RULES FOR MATERIALS AND WELDING (PART 2).

DETAILS
3. THIS DRAWING IS DIAGRAMMATIC AND DOES NOT REPRESENT A COMPLETE DETAILED DESIGN. EQUIPMENT LAYOUT IN A GIVEN AREA IS APPROXIMATE. THE CONTRACTOR SHALL DEVELOP A DETAILED DESIGN THAT PROVIDES A FULLY FUNCTIONAL ARRANGEMENT SUITABLE FOR INSTALLATION, TAKING INTO ACCOUNT ALL NECESSARY SYSTEM INTERFACES AND INTERFERENCES. DIMENSIONS SHALL BE VERIFIED FROM THE SHIP AND MANUFACTURER'S CERTIFIED DRAWINGS AS APPROPRIATE.

4. PIPING SHALL BE RUN AS DIRECTLY AS PRACTICABLE WITH A MINIMUM NUMBER OF BENDS AND FITTINGS. PIPE SPOOLS SHALL BE SIZED AND ARRANGED TO PROVIDE FOR REMOVAL, INSPECTION, SERVICING, AND REPLACEMENT OF PIPING, VALVES, FITTINGS, AND EQUIPMENT WITHOUT CUTTING STRUCTURE OR PIPING.

5. AVOID POCKETS IN THE PIPE LINES. BOSSES AND VALVES OR SCREWED PLUGS SHALL BE FITTED TO ENABLE COMPLETE DRAINING OF PIPES WHERE POCKETS DO OCCUR.

6. PIPING SHALL BE ADEQUATELY SUPPORTED BY HANGERS IN ACCORDANCE WITH ASTM F708. HANGERS SHALL BE ATTACHED TO THE PIPE WITH BOLTED CLAMPS AND WELDED TO BASIC SHIP STRUCTURE. HANGERS SHALL NOT BE WELDED DIRECTLY TO PIPES. HANGERS FOR PLASTIC PIPE SHALL ALSO MEET THE MANUFACTURER'S GUIDANCE.

7. EACH VENT PIPE SHALL BE SLOPED CONTINUOUSLY TO PROVIDE EFFECTIVE DRAINAGE BACK TO THE TANK.

8. PROVIDE AN ENGRAVED LABEL PLATE AT EACH FILL, PUMP-OFF, SOUND, AND VENT TERMINAL ON MAIN DECK.

9. PROVIDE CONTAINMENT AT SEWAGE DISCHARGE, FUEL AND OIL FILLS, VENTS, AND DISCHARGES. TOP EDGES OF CONTAINMENTS TO BE FITTED WITH 1" ROUND BAR. ALL WELDS AND CORNERS ARE TO BE GROUND SMOOTH TO PREVENT DAMAGE TO HOSES. ALL CONTAINMENTS ARE TO BE FITTED WITH DRAIN PLUGS. THESE SHALL CONSIST OF 1" BRONZE PLUGS FITTED INTO CRES HALF-COUPLINGS. THE DRAIN PLUGS SHALL BE LOCATED AS LOW AS PRACTICAL ON THE SIDE OF THE CONTAINMENT.

REFERENCES

1.	24065-200-832-0	SPECIFICATIONS
2.	24065-200-101-1	PROFILES AND ARRANGEMENTS
3.	24065-200-521-0	BILGE AND FIREMAIN PIPING DIAGRAM
4.	24065-200-528-0	BLACK AND GRAY WATER SYSTEM SCHEMATIC
5.	24065-200-533-0	FRESH WATER SYSTEM SCHEMATIC
6.	24065-200-541-0	FUEL PIPING DIAGRAM
7.	24065-200-120-0	HULL STRUCTURE

STATE OF ALASKA 49TH
SARAH E. NICHOLS
ME 146884
REGISTERED PROFESSIONAL ENGINEER
9/17/2026

ELLIOTT BAY DESIGN GROUP

CLIENT	ALASKA WILDLIFE TROOPER ANCHORAGE, AK
PROJECT	Large Class Enforcement Vessel
TITLE	FILLS, VENTS, AND SOUNDS
DWN	SEN
CHK	PTE
APVD	SEN
DATE	09/17/26
SIZE	D
DWG NO.	24065-200-506-1
REV	-
SHEET	1 OF 4
SCALE	AS NOTED

9/17/2026 11:28:54

CONFIDENTIAL AND PROPRIETARY PROPERTY OF
ELLIOTT BAY DESIGN GROUP, LLC
MAY NOT BE USED FOR CONSTRUCTION OR PROVIDED TO
ANY THIRD PARTIES WITHOUT PRIOR WRITTEN CONSENT.
© 2026 ELLIOTT BAY DESIGN GROUP.

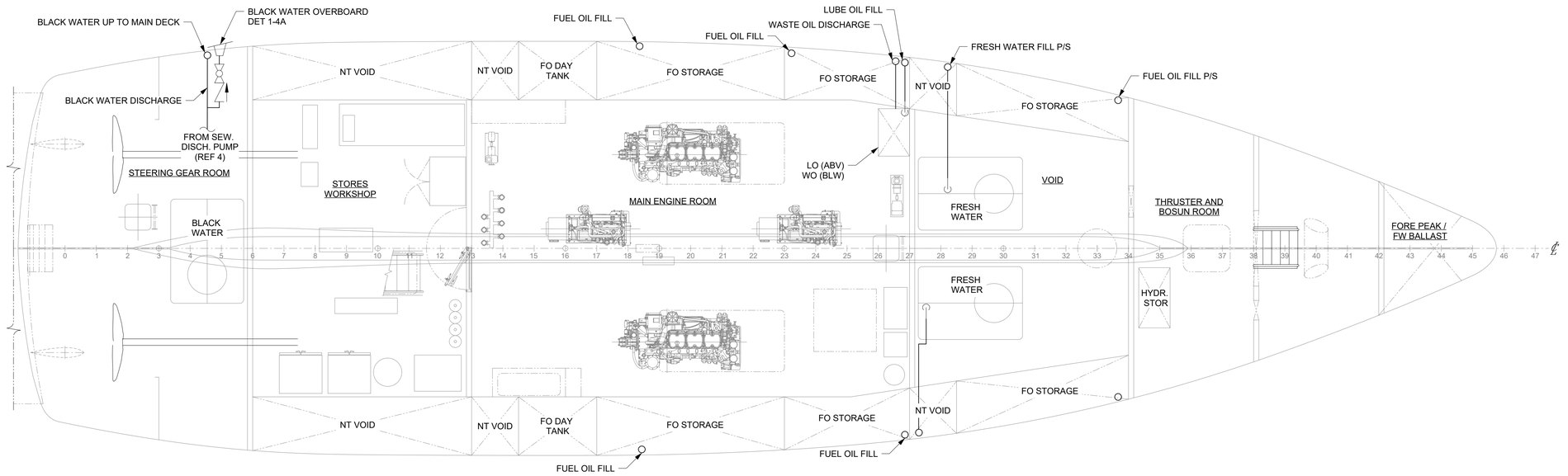

PLAN 2-4C
HOLD - TANK FILLS AND DISCHARGE

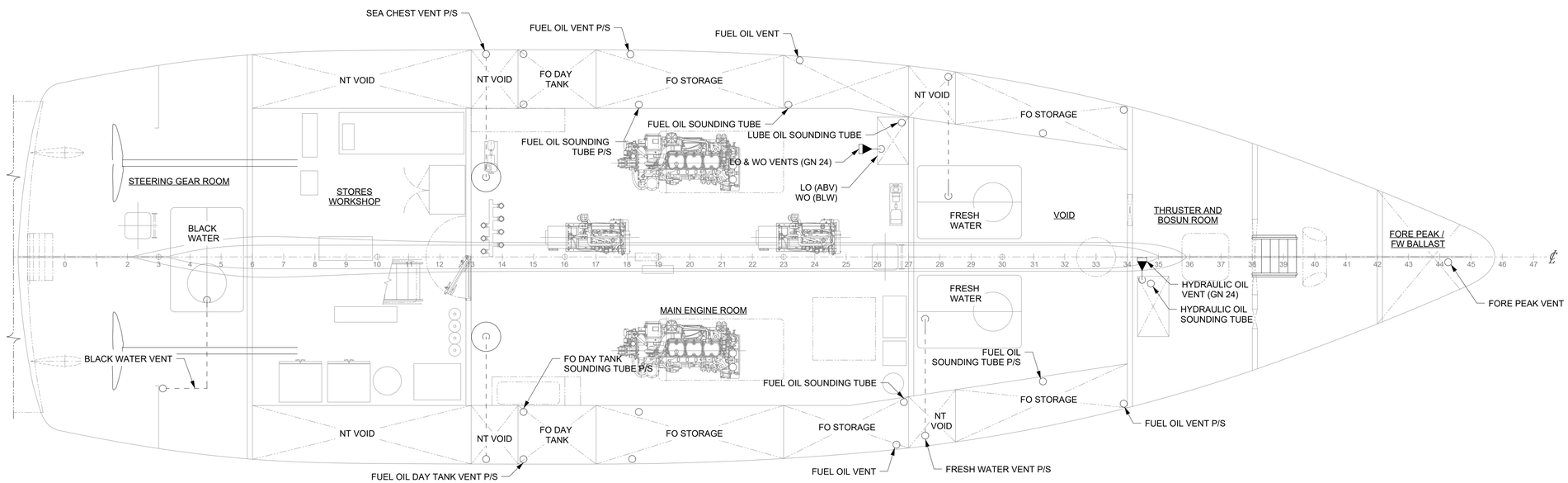

PLAN 2-4A
HOLD - TANK VENTS

STATE OF ALASKA
49TH
Sarah Nichols
SARAH E. NICHOLS
ME 146884
REGISTERED PROFESSIONAL ENGINEER

9/17/2026

SIZE	DWG NO.	REV	SHEET	OF
D	24065-200-506-1	-	2	4
			SCALE	1/4"=1'-0"

9/17/2026 11:29:54

CONFIDENTIAL AND PROPRIETARY PROPERTY OF
ELLIOTT BAY DESIGN GROUP, LLC
MAY NOT BE USED FOR CONSTRUCTION OR PROVIDED TO
ANY THIRD PARTIES WITHOUT PRIOR WRITTEN CONSENT.
© 2026 ELLIOTT BAY DESIGN GROUP.

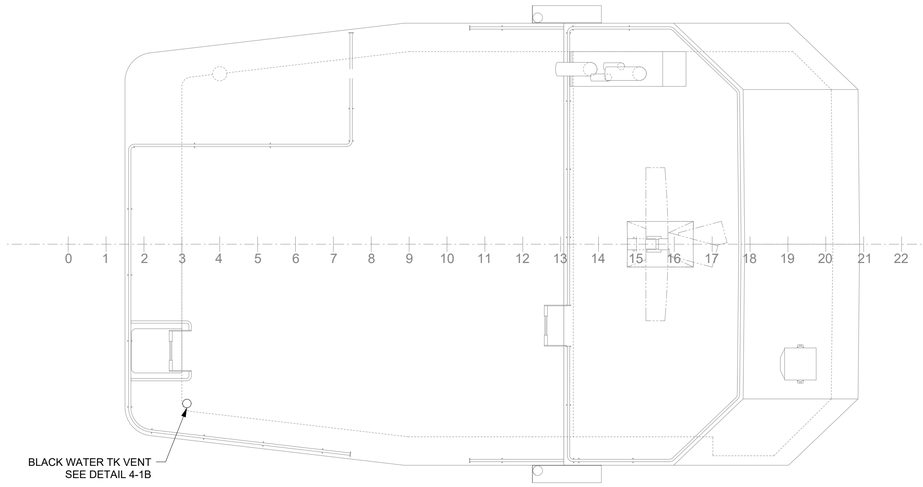

PLAN 3-5C
UPPER DECK TOP | BRIDGE DECK TOP

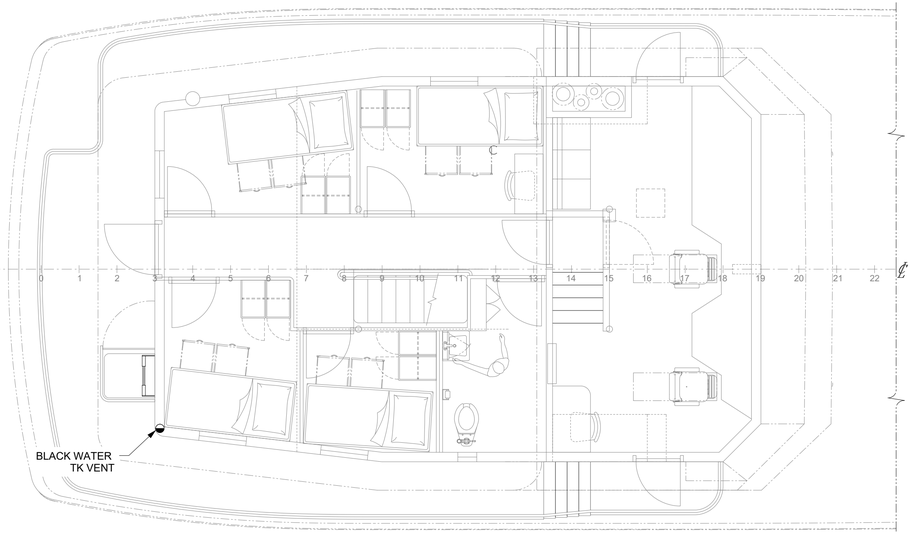

PLAN 3-3C
UPPER DECK

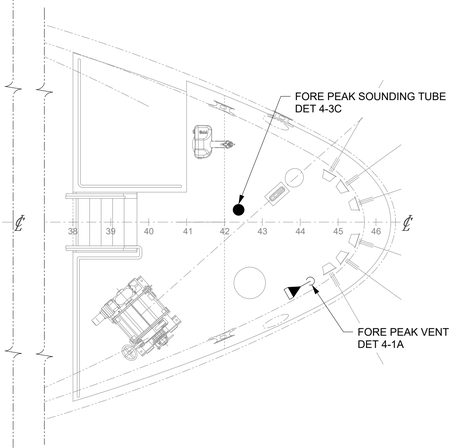

PLAN 3-1C
FOC'SLE DECK

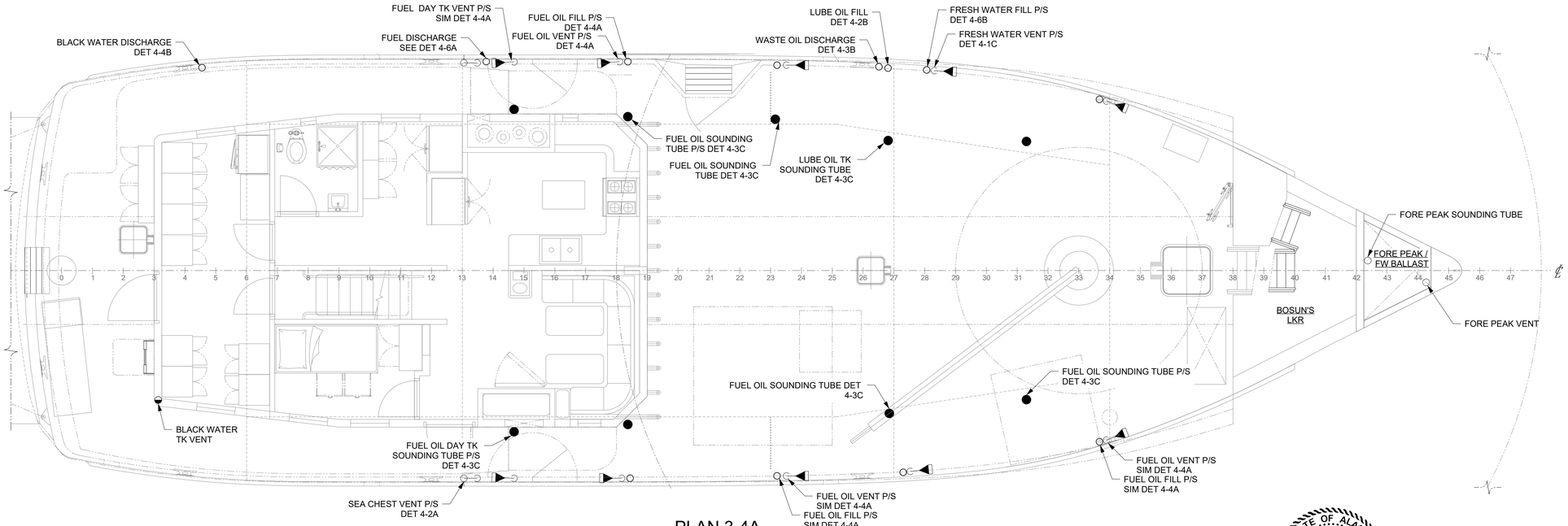

PLAN 3-4A
MAIN DECK

STATE OF ALASKA
49TH
SARAH E. NICHOLS
ME 146884
REGISTERED PROFESSIONAL ENGINEER
9/17/2026

9/17/2026 11:29:56

SIZE	DWG NO.	REV	SHEET	SCALE
D	24065-200-506-1	-	3 OF 4	1/4"=1'-0"

CONFIDENTIAL AND PROPRIETARY PROPERTY OF
ELLIOTT BAY DESIGN GROUP, LLC
MAY NOT BE USED FOR CONSTRUCTION OR PROVIDED TO
ANY THIRD PARTIES WITHOUT PRIOR WRITTEN CONSENT.
© 2026 ELLIOTT BAY DESIGN GROUP.

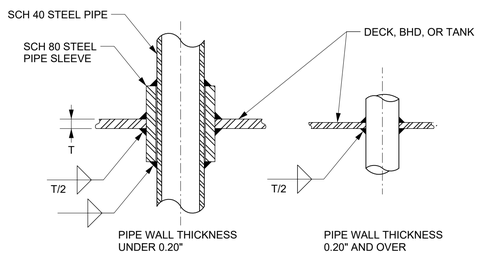

DETAIL 4-5C
TYP DECK/BHD PENETRATION

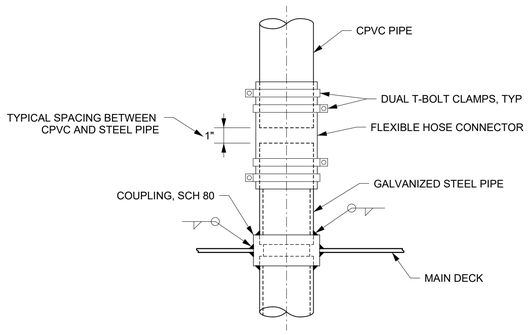

DETAIL 4-4C
BW VENT MAIN DECK PENETRATION

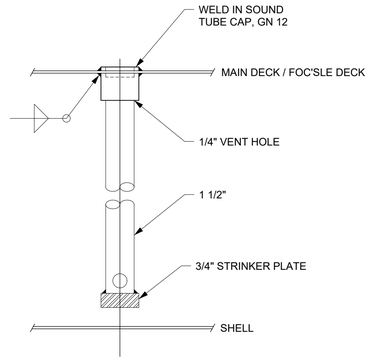

DETAIL 4-3C
SOUNDING TUBE

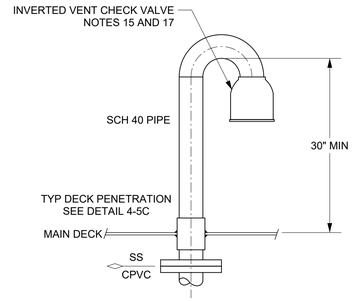

DETAIL 4-1C
FRESH WATER VENT

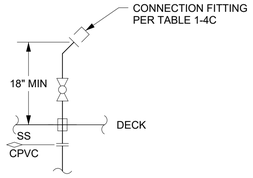

DETAIL 4-6B
FRESH WATER FILL

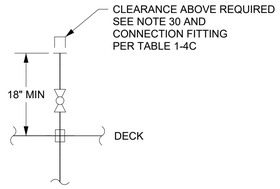

DETAIL 4-5B
FUEL FILL

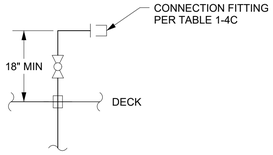

DETAIL 4-4B
BLACK WATER DISCHARGE

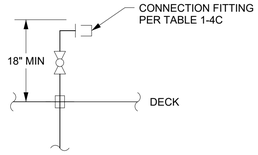

DETAIL 4-3B
WASTE OIL DISCHARGE

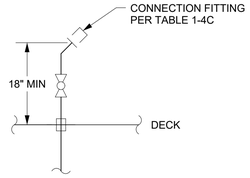

DETAIL 4-2B
LUBE OIL FILL

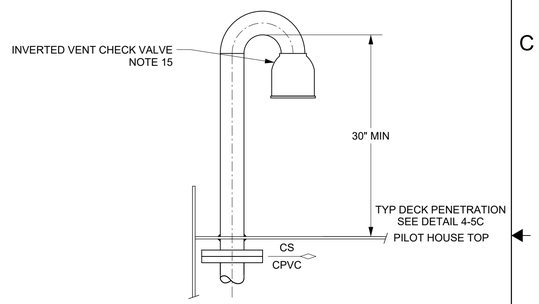

DETAIL 4-1B
SEWAGE TANK VENT

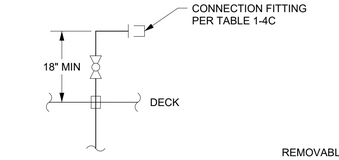

DETAIL 4-6A
FUEL DISCHARGE

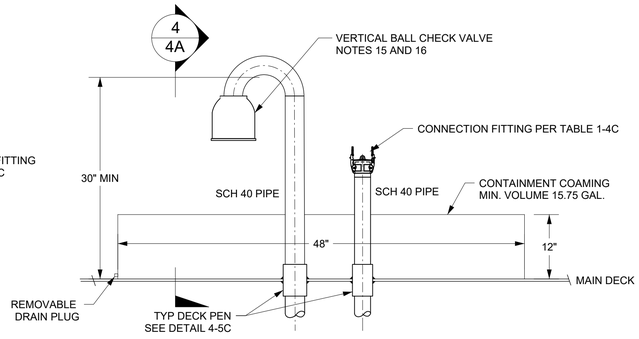

DETAIL 4-5A
FUEL OIL VENT & FILL
FUEL DISCHARGE, LUBE OIL FILL, & WASTE OIL DISCHARGE CONTAINMENT SIMILAR

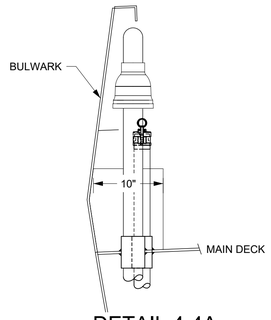

DETAIL 4-4A
FUEL OIL VENT & FILL
LUBE OIL FILL & WASTE OIL DISCHARGE CONTAINMENT SIMILAR

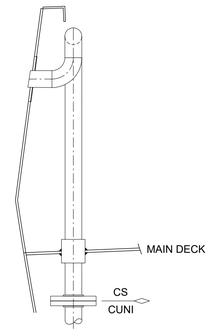

DETAIL 4-2A
SEA CHEST VENT

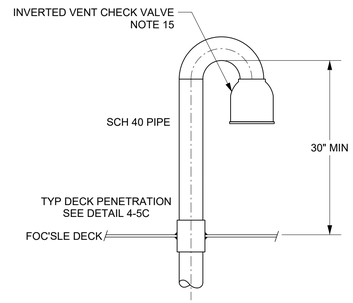

DETAIL 4-1A
FORE PEAK VENT

STATE OF ALASKA
49TH
SARAH E. NICHOLS
ME 146884
REGISTERED PROFESSIONAL ENGINEER
9/17/2026

9/17/2026 11:29:56

SIZE	DWG NO.	REV	SHEET 4 OF 4
D	24065-200-506-1	-	SCALE NONE