CONFIDENTIAL AND PROPRIETARY PROPERTY OF ELLIOTT BAY DESIGN GROUP, LLC
MAY NOT BE USED FOR CONSTRUCTION OR PROVIDED TO ANY THIRD PARTIES WITHOUT PRIOR WRITTEN CONSENT.
© 2026 ELLIOTT BAY DESIGN GROUP.

MATERIAL LIST

COMPONENT	EA	MANUFACTURER	MODEL	MATERIAL	DESCRIPTION
LINE SHAFT	2	SOUND PROPELLER OR EQUAL	4" DIAMETER	AQ22HS	55,000 PSI YIELD STRENGTH
TAIL SHAFT	2	SOUND PROPELLER OR EQUAL	5" DIAMETER	AQ22HS	55,000 PSI YIELD STRENGTH
PROPELLER	2	SOUND PROPELLER OR EQUAL	56" DIAMETER	NI-AL-BRONZE	4 BLADES, B-SERIES SEE NOTE 18
STERN TUBE	2	-	10" OD X 8" ID STEEL TUBE	ASTM A519 GR 1026 HFS	-
STRUT BEARING	2	DURAMAX MARINE	CUTLASS CODE EARTH	NAVAL BRASS	-
STERN TUBE BEARING	2	DURAMAX MARINE	CUTLASS CODE EARTH	NAVAL BRASS	-
STUFFING BOX	2	DURAMAX MARINE	1788 CODE0500 BRZ MALE PILOT	BRASS C83450	BRONZE STUFFING BOX FOR 5" SHAFT
PACKING	2	DURAMAX MARINE	UX0750-05	-	ULTRAX 3/4 INCH PACKING
PROPELLER NUTS	2	-	-	-	SEE NOTE 16 AND REF 1
LINE SHAFT ROLLER BEARING	2	CRAFT	S1 BCH 400	-	CARTRIDGE FOR 4" ID ROLLER BEARING
TAIL SHAFT ROLLER BEARING	2	CRAFT	S1 BCH 500	-	CARTRIDGE FOR 5" ID ROLLER BEARING
LINE SHAFT COUPLING	2	SOUND PROPELLER OR EQUAL	-	ABS GRADE 2 STEEL	FOR 4" OD SHAFT
TAIL SHAFT COUPLING	2	SOUND PROPELLER OR EQUAL	-	ABS GRADE 2 STEEL	FOR 5" OD SHAFT
ECOLOGY BOX	2	CONTRACTOR	15 GALLON MIN. CAPACITY	1/8" (MIN.) STAINLESS STEEL PLATE	SEE NOTE 14
PIRANHA DUAL LINE CUTTER	2	R.E. THOMAS MARINE HARDWARE, OR EQUAL	PDLC-5000	-	-

GENERAL NOTES CONTINUED

12. FINAL COUPLING DIMENSIONS AND TOLERANCES TO SUIT REDUCTION GEAR AND SHAFT MANUFACTURER REQUIREMENTS.

13. ALL COMPONENTS SHALL BE INSTALLED IN ACCORDANCE WITH THEIR MANUFACTURER'S RECOMMENDATIONS AND TOLERANCES.

14. ECOLOGY BOX SHALL FIT BELOW THE PACKING GLAND AND BETWEEN FRAMES 11 AND 12. THE ECOLOGY BOX SHALL BE WIDE ENOUGH TO CONTAIN ALL DRIPS SO THAT THE BILGE IS DRY. THE BOX SHALL CONTAIN A SUBMERSIBLE PUMP WHICH SHALL PUMP OUT THE BOX WHEN 2/3 FULL. SEE REF 1 FOR MORE DETAILS.

15. MATERIAL SPECIFICATIONS FOR SHAFT COMPONENTS SHALL BE AS FOLLOWS:

BOLTS: ABS GRADE 2
KEEPER PLATE: A36 STEEL
KEEPER PLATE BOLTS: SAE GRADE 5
SHAFT KEYS: AQ22HS, 55 KSI MIN YIELD

16. PROPELLER NUT AND FAIRING CONE TO BE DETAILED BY CONTRACTOR. AS-BUILT DRAWINGS OF ALL COMPONENTS TO BE PROVIDED TO OWNER.

17. MINIMUM ELONGATION SHALL BE 18% FOR ALL MATERIALS.

18. FINAL PROPELLER DESIGN TO BE CONFIRMED BY THE MANUFACTURER AND ~~APPROVED BY THE OWNER PRIOR TO FABRICATION.~~

RESERVATIONS

1. GENERAL NOTE 5

REVISION HISTORY

REV	ZONE	DESCRIPTION	DWN	DATE	APVD

GENERAL NOTES

GENERAL
1. THIS DRAWING PROVIDES CONTRACT GUIDANCE FOR THE CONSTRUCTION OF A NEW 91'-7" x 27'-6" x 12'-2" PATROL VESSEL FOR THE ALASKA WILDLIFE TROOPERS ALONG WITH THE CONTRACT SPECIFICATION (REF 1). THIS DRAWING SHALL NOT BE USED FOR THE CONSTRUCTION OF ADDITIONAL VESSELS.

REGULATORY
2. WHILE THE VESSEL IS UNINSPECTED BY USCG, ALL MATERIALS AND WORKMANSHIP SHALL BE IN ACCORDANCE WITH 46 CFR SUBCHAPTER T. STEEL STRUCTURE SHALL BE CONSTRUCTED TO ABS RULES FOR CONSTRUCTION AND CLASSIFICATION OF STEEL VESSELS UNDER 61 METERS (200 FEET) IN LENGTH. ALUMINUM STRUCTURE SHALL BE CONSTRUCTED IN ACCORDANCE WITH CHAPTER 5 OF THE ABS RULES FOR MATERIALS AND WELDING (PART 2).

DETAILS
3. FRAME SPACING IS 24" UNLESS OTHERWISE NOTED.

4. SHAFTS SHALL BE CONCENTRIC WITH THE AXIS OF ROTATION WITHIN A TOLERANCE OF 0.0075 INCH (0.015 RUNOUT) THE CHANGE IN CONCENTRICITY IN ANY 48 INCHES SHALL NOT EXCEED 0.0025 INCH (0.005 INCH RUNOUT)

5. A SHAFT TACHOMETER SYSTEM SHALL BE INSTALLED FOR DISPLAY OF SHAFT RPM AND ROTATION AT THE PILOT HOUSE CONSOLE.

6. PROVIDE AND INSTALL A SHAFT GROUNDING ASSEMBLY ON EACH SHAFT.

7. TAIL SHAFT AND STRUT BEARINGS ARE TO BE ALIGNED USING CHOCKFAST ORANGE RESIN. ARRANGEMENT AND INSTALLATION PROCEDURE SHALL BE IN ACCORDANCE WITH MANUFACTURER'S RECOMMENDATIONS. BEARING SURFACES IN CONTACT WITH RESIN ARE TO BE LIBERALLY COATED WITH RELEASE AGENT. DRILL STERN TUBE AND STRUT BARREL AS REQUIRED FOR JACKING SCREWS AND CHOCKFAST FILL / VENT CONNECTIONS.

8. DETAILED PLANS AND MATERIAL SPECIFICATIONS FOR COUPLINGS, COUPLING BOLTS, PROPELLERS, AND MACHINERY SHALL BE SUBMITTED TO THE OWNER FOR APPROVAL PRIOR TO FABRICATION.

9. SHAFTING ALIGNMENT AND TORSIONAL VIBRATION CALCULATIONS SHALL BE SUBMITTED TO THE OWNER. SEE REF 1.

10. KEYS AND KEYWAYS ARE TO BE MANUFACTURED FOR A CLASS 2 SLIDING FIT. SHAFT KEYWAYS TO HAVE 1/4" BOTTOM RADII, AND SPOONED ENDS PER 4-3-2/FIGURE 2 OF ABS MARINE VESSEL RULES. KEYS AND KEYWAYS SHALL BE FINISHED TO 63 RMS AFTER MACHINING. ALL SHARP CORNERS AND ALL TOOL OR GRINDER MARKS SHALL BE REMOVED.

11. SHAFT JOURNALS, SLEEVE FIT AREA OF SHAFT, AND SHAFT TAPERS SHALL BE CONCENTRIC WITH THE AXIS OF ROTATION WITHIN 0.0005 INCH (0.001 INCH RUNOUT).

REFERENCES

1. 24065-832-0	TECHNICAL SPECIFICATION
2. 24065-562-0	STEERING AND RUDDER ARRANGEMENT AND DETAILS
3. 24065-130-0	DECK PLANS
4. 24065-256-1	SEA WATER COOLING SYSTEM DIAGRAM

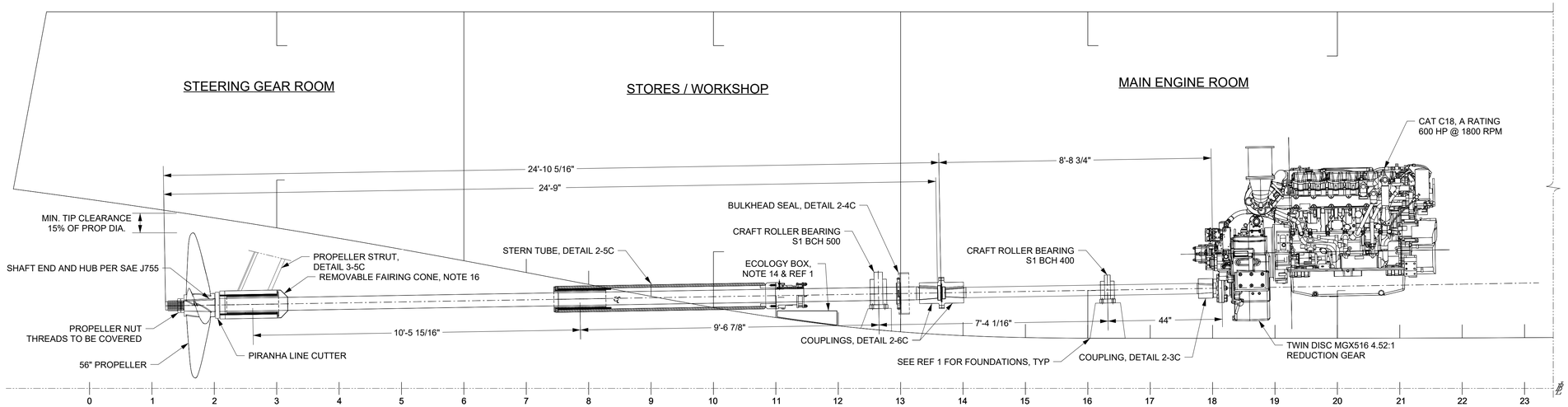

ELEVATION 1-4B

PROPULSION SHAFT ARRANGEMENT

6'-0" OCL, PORT SHOWN, STBD OPP SIM
SCALE: 1/2"=1'-0"

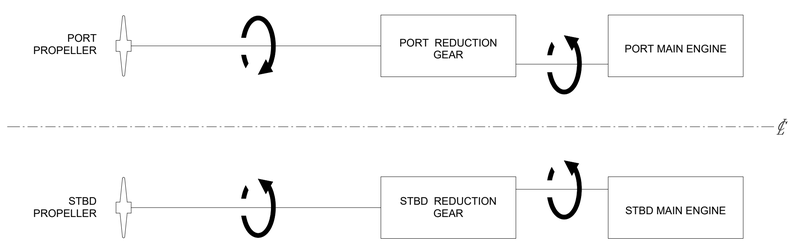

DETAIL 1-4A

AHEAD ROTATION DIAGRAM

SCALE: NONE

STATE OF ALASKA
49TH
SARAH E. NICHOLS
ME 146884
REGISTERED PROFESSIONAL ENGINEER

10/2/2026

ELLIOTT BAY DESIGN GROUP

CLIENT	ALASKA WILDLIFE TROOPER ANCHORAGE, AK	DWN	SEN
		CHK	PTE
		APVD	SEN
PROJECT	Large Class Enforcement Vessel	DATE	10/02/26
TITLE	SHAFTING ARRANGEMENTS		
SIZE	D	DWG NO.	24065-200-243-0
REV	-	SHEET	1 OF 3
SCALE	AS NOTED		

10/2/2026 6:28:48

CONFIDENTIAL AND PROPRIETARY PROPERTY OF
ELLIOTT BAY DESIGN GROUP, LLC
MAY NOT BE USED FOR CONSTRUCTION OR PROVIDED TO
ANY THIRD PARTIES WITHOUT PRIOR WRITTEN CONSENT.
© 2026 ELLIOTT BAY DESIGN GROUP.

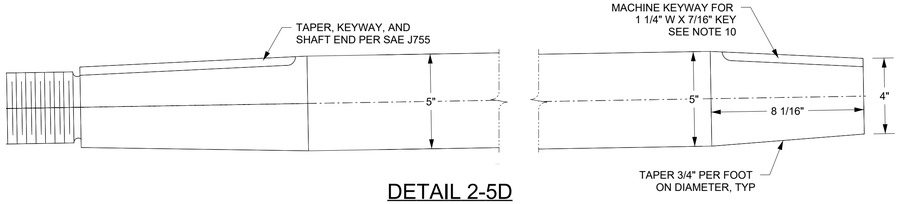

DETAIL 2-5D
TAIL SHAFT ENDS
SCALE: 3"=1'-0"

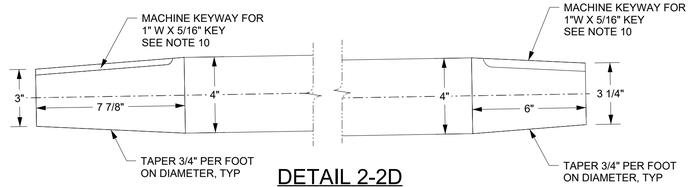

DETAIL 2-2D
LINE SHAFT ENDS
SCALE: 3"=1'-0"

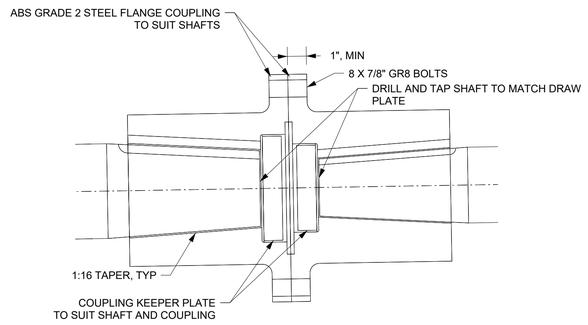

DETAIL 2-6C
SHAFT COUPLINGS
SCALE: 3"=1'-0"

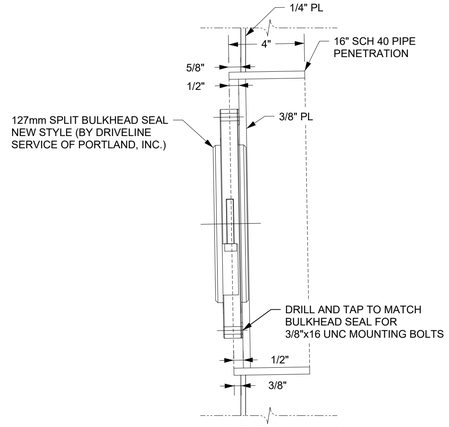

DETAIL 2-4C
BULKHEAD SEAL
SCALE: 3"=1'-0"

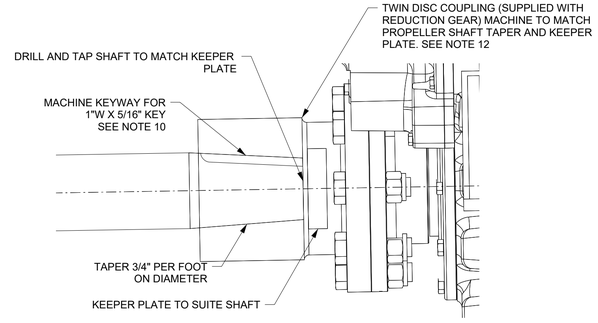

DETAIL 2-3C
SHAFT COUPLINGS
SCALE: 3"=1'-0"

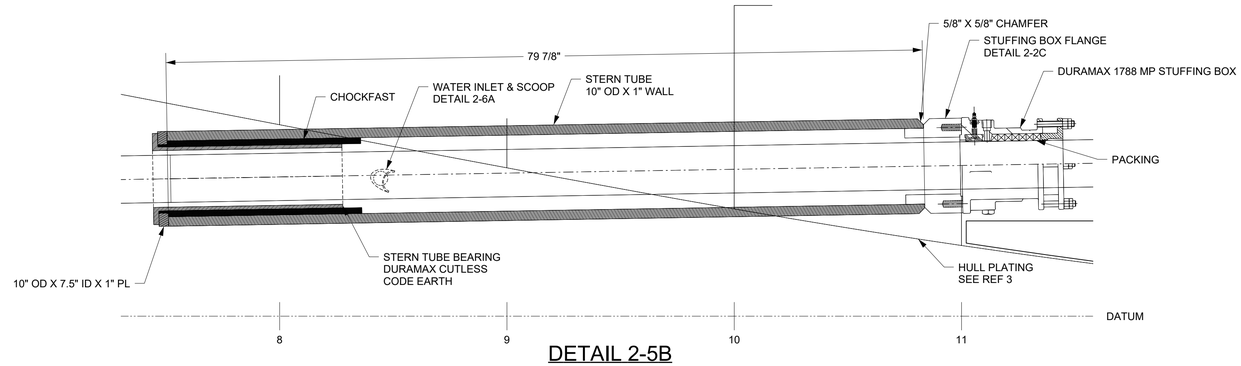

DETAIL 2-5B
STERN TUBE
SCALE: 1 1/2"=1'-0"

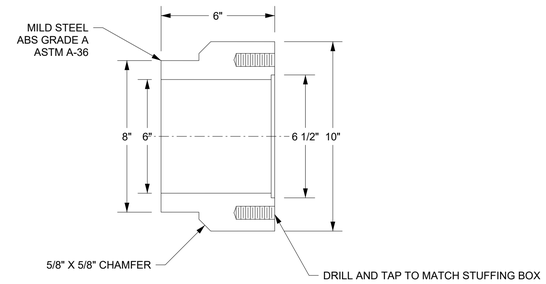

DETAIL 2-2C
STUFFING BOX FLANGE
SCALE: 3"=1'-0"

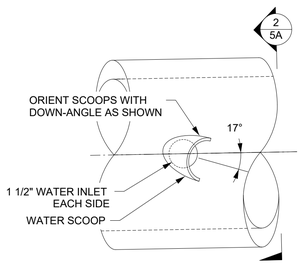

DETAIL 2-6A
WATER SCOOP
SCALE: 3"=1'-0"

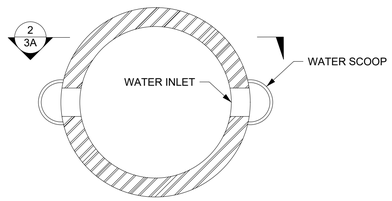

SECTION 2-5A
WATER SCOOP
SCALE: 3"=1'-0"

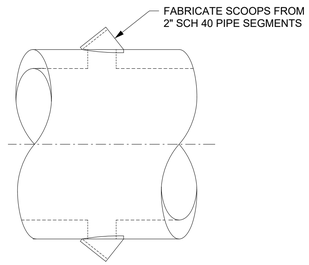

PLAN 2-3A
WATER SCOOP
SCALE: 3"=1'-0"



10/2/2026

SIZE	DWG NO.	REV	SHEET	OF
D	24065-200-243-0	-	2	3
		SCALE	AS NOTED	

10/2/2026 6:28:50

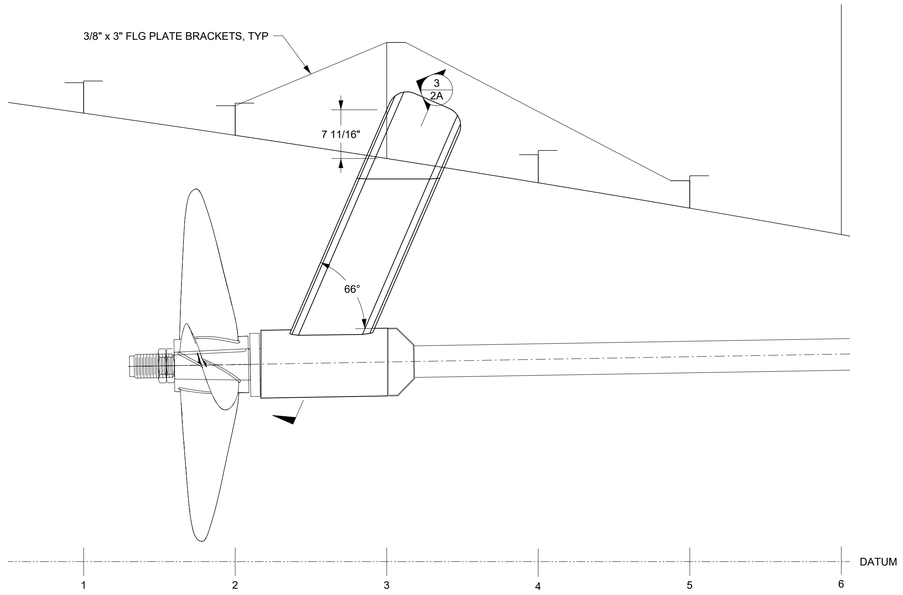

ELEVATION 3-5C
TYPICAL SHAFT STRUT
7'-3" OCL (S) LKG INBOARD
SCALE: 1"=1'-0"

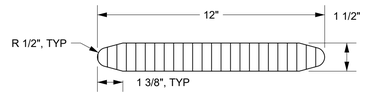

DETAIL 3-2C
TYP STRUT ARM CROSS SECTION
SCALE: 3"=1'-0"

CALCULATIONS

ABS REQUIRED VALUES (PER 3-2-10.17.1)

DATA
D= RULE REQ'D GRADE 2 SHAFT DIAMETER
D = 4.75 IN

MINIMUM STRUT BARREL THICKNESS
t = D/4
t = 1.25"

MINIMUM STRUT ARM MOMENT OF INERTIA
I = 0.0044D^4
I = 2.26 IN^4

MINIMUM STRUT SECTION MODULUS
SM = 0.024 D^3
SM = 2.59 IN^3

STRUT PROPERTIES
STRUT ARM PROFILE PER DETAIL 3-2C

d = PLATE STRUT THICKNESS
d = 1.5 IN

b = STRUT WIDTH (NON-RADIUSED)
b = 9.25 IN

STRUT ARM MOMENT OF INERTIA:
I = bd^3/12
I = 2.6 IN^4

STRUT ARM SECTION MODULUS
SM = bd^2/6
SM = 3.47 IN^3

THIS STRUT ARM SCANTLINGS SATISFY ABS REQUIREMENTS

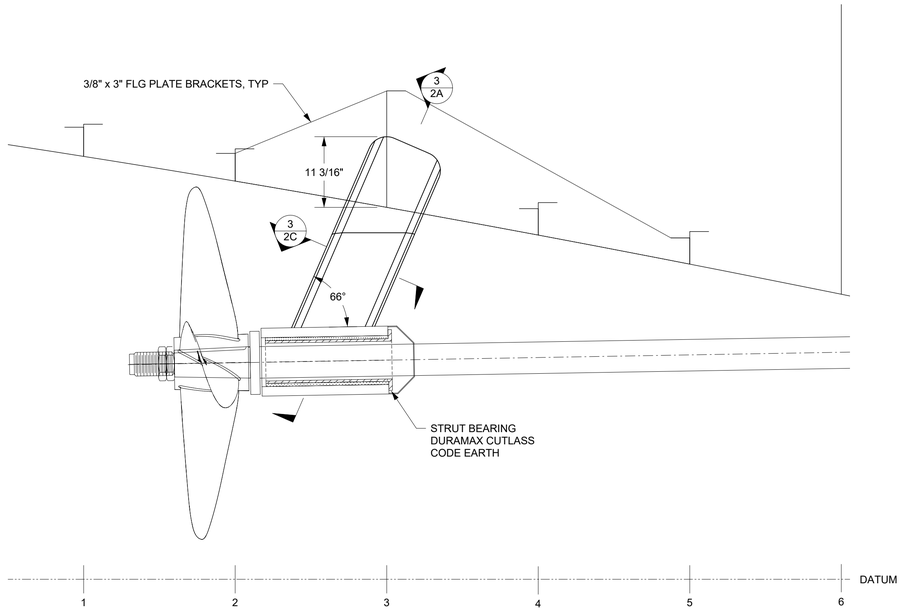

ELEVAITON 3-5A
SHAFT STRUT - BARREL CL & INBOARD LEG
LOOKING TO INBOARD
SCALE: 1"=1'-0"

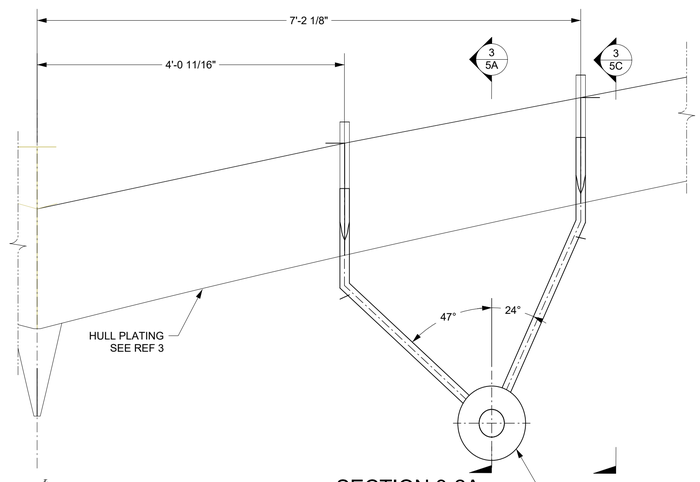

SECTION 3-2A
SHAFT STRUT - FR 3
PORT SHOWN, LOOKING FWD
STBD OPP SIM
SCALE: 1"=1'-0"

STATE OF ALASKA
49TH
SARAH E. NICHOLS
ME 146884
REGISTERED PROFESSIONAL ENGINEER
10/2/2026

10/2/2026 6:28:51

SIZE	DWG NO.	REV	SHEET	OF
D	24065-200-243-0	-	3	3
		SCALE	AS NOTED	