US Army Corps of Engineers®
SEATTLE DISTRICT

ADVANCE MEASURES 2025
MENDENHALL RIVER
JUNEAU, AK

##

SOLICITATION NO.: ##################
CONTRACT NO.: ##################
ISSUE DATE: ################
#########

SHEET INDEX

G-001	COVER SHEET AND SHEET INDEX
G-002	GENERAL NOTES
CS101	PHASE 2 SITE PLAN
C-501	TYPICAL FLOOD BARRIER DETAILS
C-502	GENERAL DETAILS
C-101	REACH 1 PLAN AND TYPICAL SECTION VIEW
C-102	REACH 2 PLAN AND TYPICAL SECTION VIEW
C-103	REACH 3 PLAN AND TYPICAL SECTION VIEW
C-104	REACH 4 PLAN AND TYPICAL SECTION VIEW
C-105	REACH 5 PLAN VIEW
C-106	REACH 6 PLAN AND TYPICAL SECTION VIEW

US Army Corps of Engineers®

MARK	DESCRIPTION	DATE

DESIGNED BY: C. JEET
DRAWN BY: A. MOOLEY
CHECKED BY: C. JEET
SUBMITTED BY: D. DOWNING
SIZE: ANSI D
ISSUE DATE: ##########
SOLICITATION NO.: ##########
CONTRACT NO.: ##########

U.S. ARMY CORPS OF ENGINEERS
SEATTLE DISTRICT
SEATTLE WASHINGTON
##########

MENDENHALL, ALASKA
PHASE 2
##########
COVER PAGE AND SHEET INDEX

SHEET ID
G-001

#######

GENERAL NOTES:

1. THE BASIS OF COORDINATES IS THE NAD83(2011)(EPOCH: 2010.0000) ALASKA STATE PLANE ZONE 1 (AKSPZ1) POSITION OF CONTROL POINT (CP) 1, BASED ON A 4-HOUR GNSS OCCUPATION PROCESSED BY THE NGS OPUS UTILITY. CP 1 IS A 1-1/4" YELLOW PLASTIC CAP ON A 5/8" X 30" REBAR, SET THIS SURVEY, LOCATED NEAR THE SOUTHEAST CORNER OF THE PROJECT. THE NAD83 AKSPZ1 COORDINATES ARE 2,399,915.39' NORTH, 2,509,799.06' EAST. (58°24'04.1948" NORTH, 134°35'05.3488 WEST)
2. THE BASIS OF BEARING FOR THIS SURVEY IS THE NAD83 AKSPZ1 GRID COORDINATE SYSTEM.
3. THE VERTICAL DATUM IS MEAN LOW WATER (MLLW) BASED ON A 70-MINUTE STATIC TIE TO THE NATIONAL OCEANIC AND ATMOSPHERIC ADMINISTRATION NATIONAL OCEAN SERVICE TIDAL BENCHMARK, STAMPED 2200 M 2017. THE TIDAL BENCHMARK IS LOCATED AT THE STATE LIBRARY ARCHIVES AND MUSEUM, SET IN A CONCRETE ELECTRIC VAULT, AT THE NORTHWEST CORNER OF WHITTIER STREET AND THIRD AVENUE, IN JUNEAU, AK. TIDAL BENCHMARK 2200 M 2017 HAS A PUBLISHED ELEVATION OF 8.420 METERS (27.63 FEET) ABOVE MLLW).
4. ALL MEASUREMENTS ARE IN U.S. SURVEY FEET.
5. THE ELEVATIONS AND HORIZONTAL POSITIONS OF TOPOGRAPHIC FEATURES WERE ESTABLISHED USING BATHYMETRIC SURVEYING AND GLOBAL POSITIONING SURVEYING METHODS.
6. VERIFY ALL HORIZONTAL AND VERTICAL CONTROL POINTS PRIOR TO USE.
7. NO GEOTECHNICAL INVESTIGATION WAS PERFORMED FOR THIS PROJECT. HARDPAN, STUMPS, LOGS, AND ORGANICS MAY BE ENCOUNTERED AT VARIOUS DEPTHS DURING EXCAVATION. THESE MATERIALS WILL BE DISPOSED OF AS REQUIRED BY THE CONTRACTING OFFICER REPRESENTATIVE (COR).
8. GRADES AND ALIGNMENTS SHOWN ON THESE PLANS ARE SUBJECT TO MINOR REVISIONS AS APPROVED BY THE ENGINEER.
9. LOCATIONS OF STORM DRAIN SYSTEMS, PIPING, AND PIPE LENGTHS ARE SUBJECT TO MINOR REVISIONS AS APPROVED BY THE ENGINEER.
10. ALL ITEMS DESIGNATED TO BE REMOVED WILL BE DISPOSED OF AT AN APPROVED DISPOSAL SITE, EXCEPT AS NOTED IN THE CONTRACT DOCUMENTS.
11. THE CONTRACTOR WILL NOT STORE MATERIALS OR EQUIPMENT OR OPERATED EQUIPMENT WITH ITS TRACKS OR WHEELS PLACED ON PRIVATE PROPERTY WITHOUT THE WRITTEN APPROVAL OF THE PROPERTY OWNER.
12. THE CONTRACTOR WILL REFERENCE ALL EXISTING PROPERTY CORNER MONUMENTS (I.E. BRASS CAP MONUMENTS, REBARS OR CHISELED X'S) PRIOR TO CONSTRUCTION THAT WILL BE DISTURBED DURING CONSTRUCTION ACTIVITIES, AND REMONUMENT AFTER CONSTRUCTION OPERATIONS. ALL WORK WILL BE DONE BY, OR UNDER THE DIRECTION OF, AN ALASKA REGISTERED LAND SURVEYOR. ALL EXISTING PROPERTY CORNERS ARE NOT NECESSARILY SHOWN ON THE PLANS.
13. ALASKA ELECTRIC LIGHT & POWER (AEL&P), ALASKA COMMUNICATIONS SYSTEMS (ACS), AND GENERAL COMMUNICATION, INC. (GCI), MAY CONDUCT WORK WITHIN THE PROJECT LIMITS TO RELOCATE UTILITIES AND TO UPGRADE THEIR RESPECTIVE SYSTEMS. THE CONTRACTOR WILL COORDINATE CONSTRUCTION ACTIVITIES WITH EACH UTILITY COMPANY AND PROVIDE ACCESS AS NECESSARY FOR UTILITY COMPANIES TO COMPLETE THEIR WORK.
14. CONTRACTOR WILL INSTALL AND MAINTAIN EROSION CONTROL DEVICES AS REQUIRED -- EROSION AND SEDIMENT CONTROL.
15. ALL DISTURBED SURFACES ARE TO BE COVERED WITH 4" OF TOPSOIL AND SEED.
16. THE CONTRACTOR IS RESPONSIBLE FOR ANY AND ALL DAMAGES TO PRIVATE AND PUBLIC PROPERTY ASSOCIATED WITH CONSTRUCTION ACTIVITIES, INCLUDING BUT NOT LIMITED TO PAVEMENT DAMAGE. PROPERTY DISTURBED WILL BE RESTORED TO ITS PRE-CONSTRUCTION CONDITION OR BETTER AT NO ADDITIONAL COST.

FENCE NOTES:

1. PRIOR TO DISASSEMBLY, CONTRACTOR WILL SURVEY FENCE POST LOCATIONS, RECORD FENCE PANEL DIMENSIONS AND LOCATIONS, AND INVENTORY HARDWARE. CONTRACTOR TO REASSEMBLE FENCE POSTS AND PANELS IN THEIR ORIGINAL LOCATIONS.
2. FENCE POSTS TO BE SET CENTERED IN PVC SEWER PIPE AND CAST IN CONCRETE.
3. BOLTS TO BE GALVANIZED STEEL, 19 64" DIAMETER, 2" LENGTH. ONE NUT AND TWO LOCK WASHERS, SIZED TO FIT BOLT, TO BE INSTALLED PER BOLT. BOLT DIMENSIONS SHALL BE FIELD VERIFIED PRIOR TO FENCE DISASSEMBLY AND APPROVED BY THE ENGINEER.

CHECK VALVE NOTES:

1. CHECK VALVE TO BE INSTALLED AT INLET END OF P-4. CLAMP TO BE INSTALLED IN UPSTREAM CUFF.
2. BOLT OR PIN CHECK VALVE IN 4 PLACES 90° APART.
3. MAXIMUM ALLOWABLE BACK PRESSURE = 45.0'

US Army Corps of Engineers®

MARK	DESCRIPTION	DATE

DESIGNED BY: C. IFFT
DRAWN BY: A. MCCULLEY
CHECKED BY: C. IFFT
SUBMITTED BY: D. DOWNING
SIZE: ANSI D
ISSUE DATE: ##########
SOLICITATION NO.: ##########
CONTRACT NO.: ##########

U.S. ARMY CORPS OF ENGINEERS
SEATTLE DISTRICT
SEATTLE, WASHINGTON
##########

MENDENHALL, ALASKA
PHASE 2
##########
GENERAL NOTES

SHEET ID
########
G-002

REACH 1
REACH 2
REACH 3
REACH 4
REACH 5
REACH 6
MENDENHALL VALLEY
Montana Creek
Montana Creek Trail
Tongass National Forest
Eagle Crest Loop Trail
Eagle Crest Trail
Dark Creek
Fish Creek
Fish Creek Trail
Fish Mountain Loop
Fish Mountain Trail
Fish Hatchery
Fish Creek Way
Fish Creek Rd
Fish Creek Dr
Fish Creek Ln
Fish Creek Cir
Fish Creek Ct
Fish Creek Pl
Fish Creek Ave
Fish Creek Blvd
Fish Creek Terrace
Fish Creek Court
Fish Creek Circle
Fish Creek Place
Fish Creek Lane
Fish Creek Drive
Fish Creek Avenue
Fish Creek Boulevard

GENERAL NOTES

1. A COMBINATION OF MACCAFERRI FLEXMAC DT AND HESCO FLOODLINE BARRIERS WILL BE PROVIDED AS GOVERNMENT FURNISHED EQUIPMENT. MANUFACTURER INSTALLATION INSTRUCTIONS AND GUIDELINES WILL BE UTILIZED WHEN ASSEMBLING AND FILLING BARRIERS. SEE CONSTRUCTION GUIDE FOR ENGINEERS, ENVIRONMENTAL BARRIERS, VERSION 2.0, HESCO 2017.
2. FOUNDATION WILL BE FIRM AND LEVEL PRIOR TO PLACING BARRIERS.
3. FILL MATERIAL WILL BE PLACED IN LAYERS. MAXIMUM LAYER THICKNESS OF 6 INCHES FOR FIRST LAYER AND THEN A MAXIMUM THICKNESS OF 12 INCHES FOR SUBSEQUENT LAYERS. FILL MATERIAL IS TO BE SPREAD AND COMPACTED BEFORE PLACING FURTHER LAYERS.
4. WHEN MULTIPLE ROWS OF BARRIERS ARE PLACED ADJACENT TO EACH OTHER, THE END JOINTS WILL BE STAGGERED,
5. WHERE POSSIBLE BARRIERS WILL BE POSITIONED A MINIMUM OF 5' AWAY FROM THE TOP EDGE OF THE WATERSIDE SLOPE.

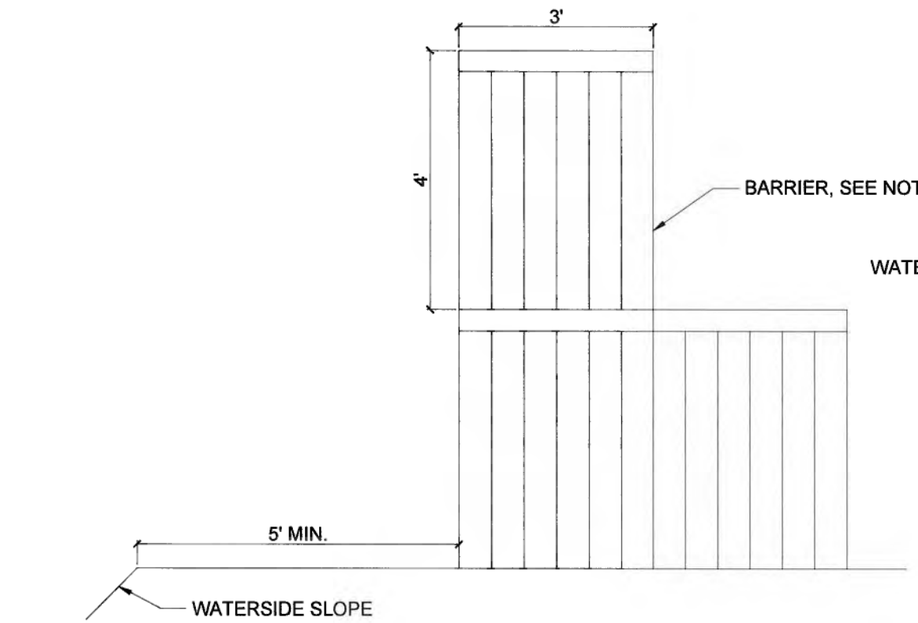

H1 TYPICAL TWO HIGH BARRIER DETAIL
SCALE: NTS

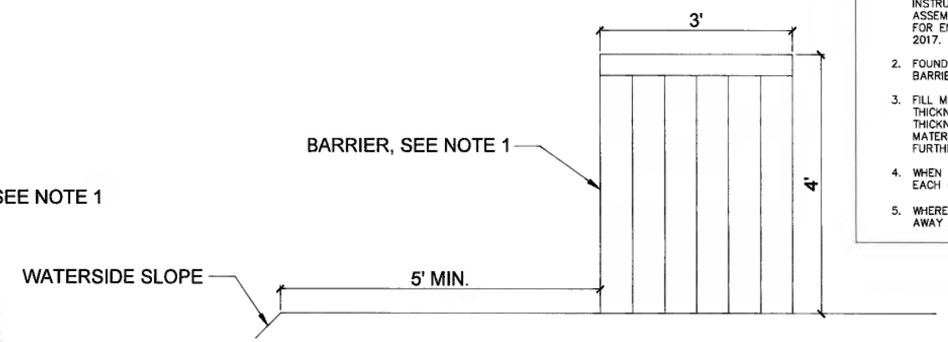

K11 TYPICAL ONE HIGH BARRIER DETAIL
SCALE: NTS

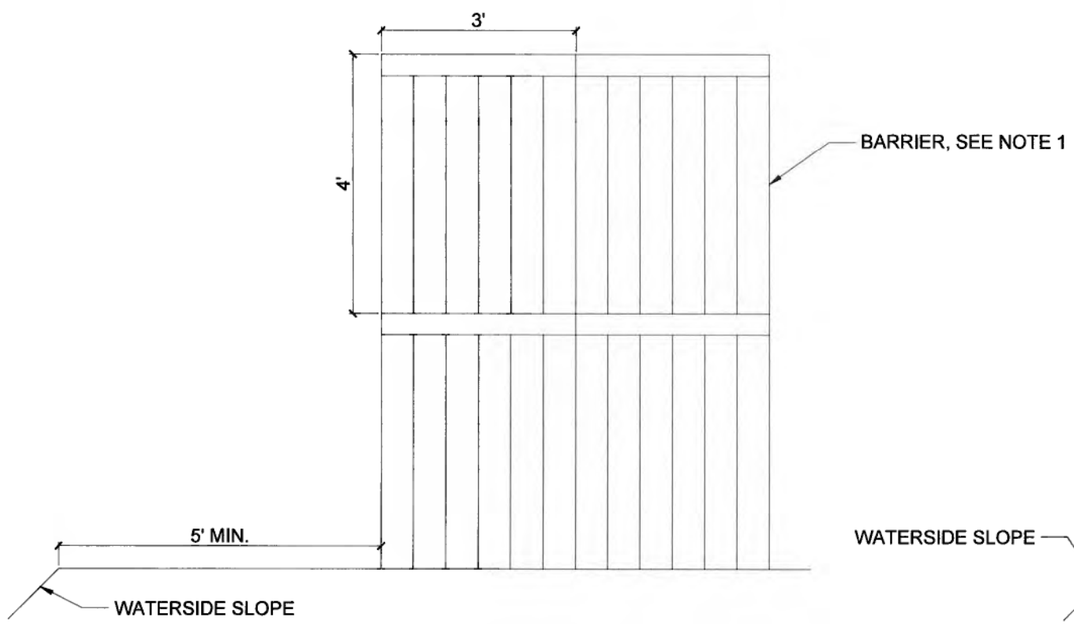

A1 TYPICAL TWO HIGH BARRIER DETAIL FOR AREAS OF DEBRIS STRIKES
SCALE: NTS

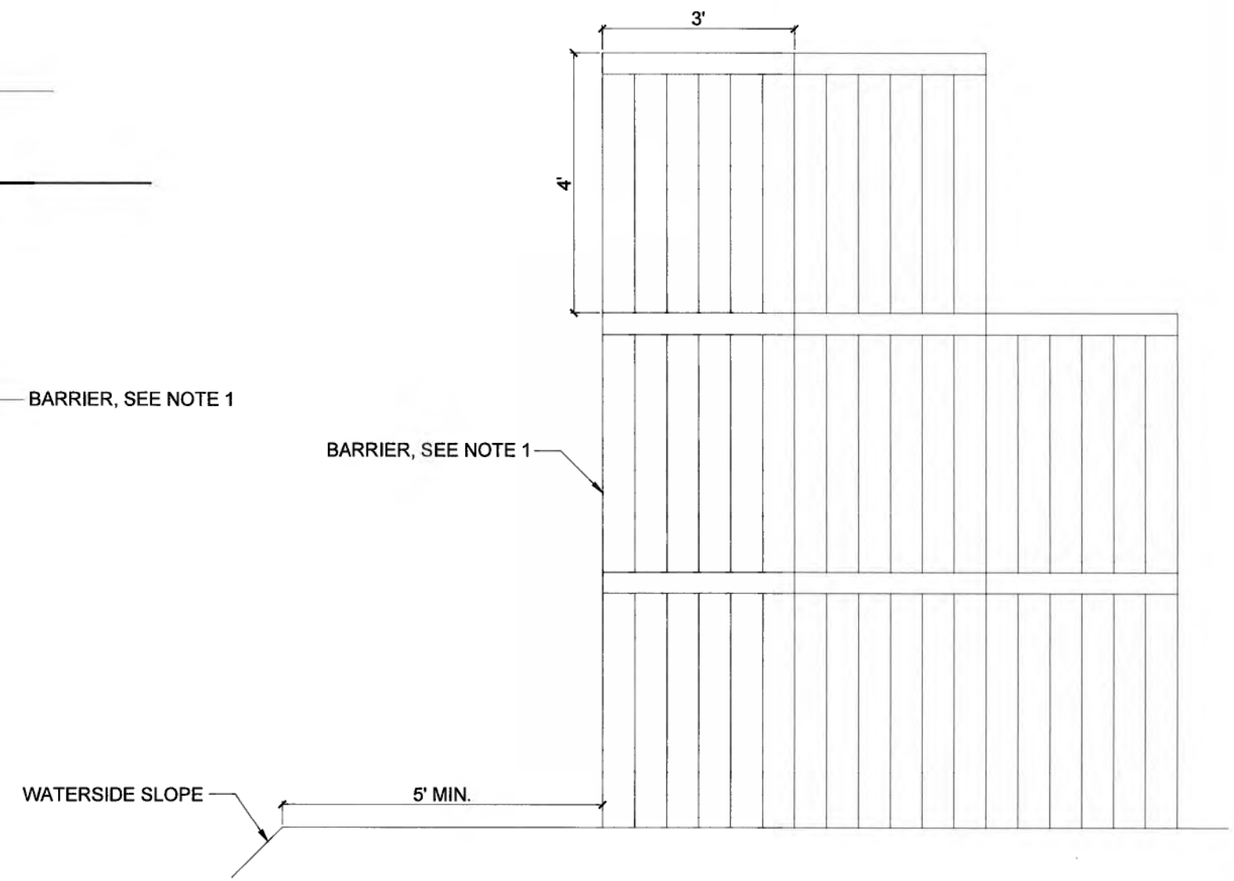

A11 TYPICAL THREE HIGH BARRIER DETAIL
SCALE: NTS

US Army Corps of Engineers®

MARK	DESCRIPTION	DATE

DESIGNED BY: C. IFFT
DRAWN BY: A. WOOLLEY
CHECKED BY: C. IFFT
SUBMITTED BY: D. DOWNING
SIZE: ANSI D
ISSUE DATE: ##########
SOLICITATION NO.: ##########
CONTRACT NO.: ##########

U.S. ARMY CORPS OF ENGINEERS
SEATTLE DISTRICT
SEATTLE, WASHINGTON
##########

MENDENHALL, ALASKA
PHASE 2
##########

TYPICAL FLOOD BARRIER DETAILS
##########

SHEET ID
########
C-501

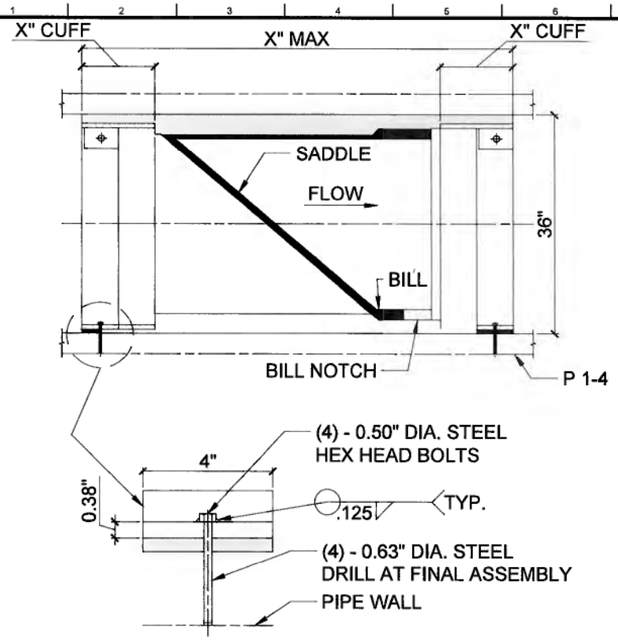

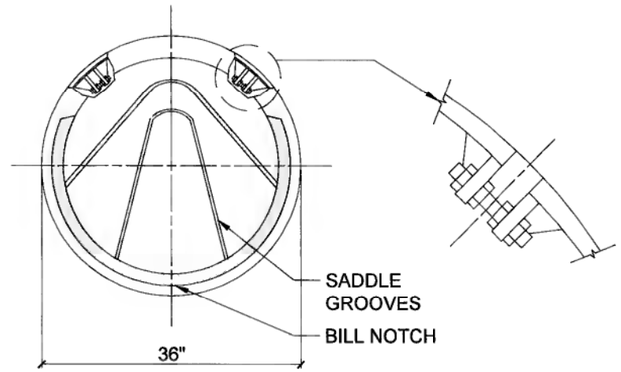

H1 CHECK VALVE DETAIL - 36"

SCALE: NTS

GENERAL NOTES

1. NOTE TEXT

US Army Corps of Engineers®

MARK	DESCRIPTION	DATE

U.S. ARMY CORPS OF ENGINEERS
SEATTLE DISTRICT
SEATTLE, WASHINGTON
##########

DESIGNED BY: C. EFT
DRAWN BY: A. WOOLLEY
CHECKED BY: C. EFT
SUBMITTED BY: D. DOWNING
SIZE: ANSI D
ISSUE DATE: ##########
SOLICITATION NO.: ##########
CONTRACT NO.: ##########
##########
###
##########
##########

MENDENHALL, ALASKA
PHASE 2
##########
##########
##########
GENERAL DETAILS
##########

SHEET ID
#########
C-502

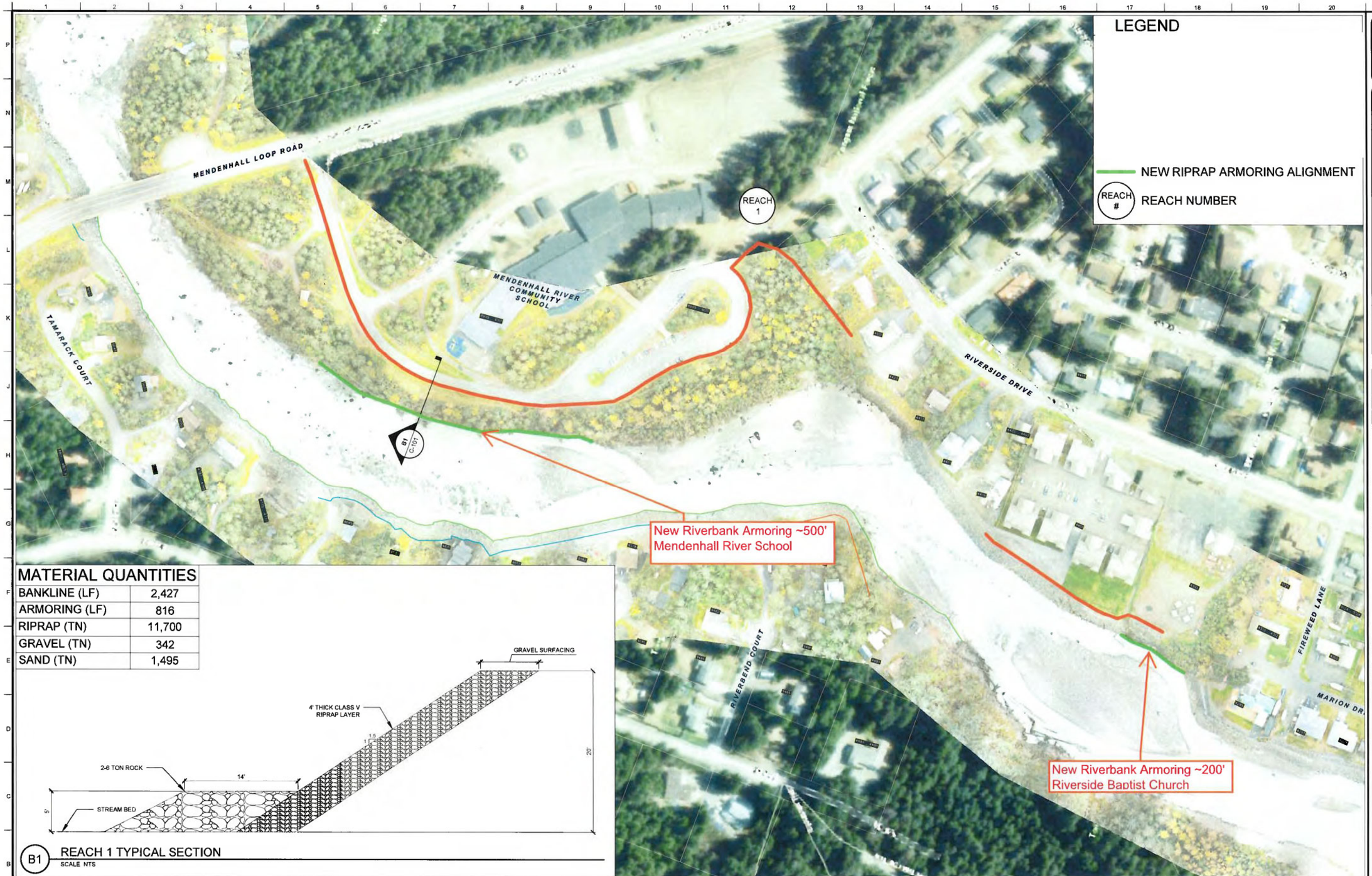

MATERIAL QUANTITIES

BANKLINE (LF)	2,427
ARMORING (LF)	816
RIPRAP (TN)	11,700
GRAVEL (TN)	342
SAND (TN)	1,495

B1 REACH 1 TYPICAL SECTION
SCALE: NTS

A1 REACH 1 FROM BACKLOOP BRIDGE TO MARION (LEFT BANK) PLAN VIEW
SCALE: 1" = 100'

US Army Corps of Engineers®

MARK	DESCRIPTION	DATE

DESIGNED BY: C. IFFT
DRAWN BY: A. MCCLEY
CHECKED BY: C. IFFT
SUBMITTED BY: D. DOMINING
SIZE: ANSI D
ISSUE DATE: ##########
SOLICITATION NO.: ##########
CONTRACT NO.: ##########

U.S. ARMY CORPS OF ENGINEERS
P.O. BOX 3755
SEATTLE, WASHINGTON
98124-3755

MENDENHALL, ALASKA
PHASE 2
REACH 1 PLAN AND TYPICAL SECTION VIEW

SHEET ID
C-101

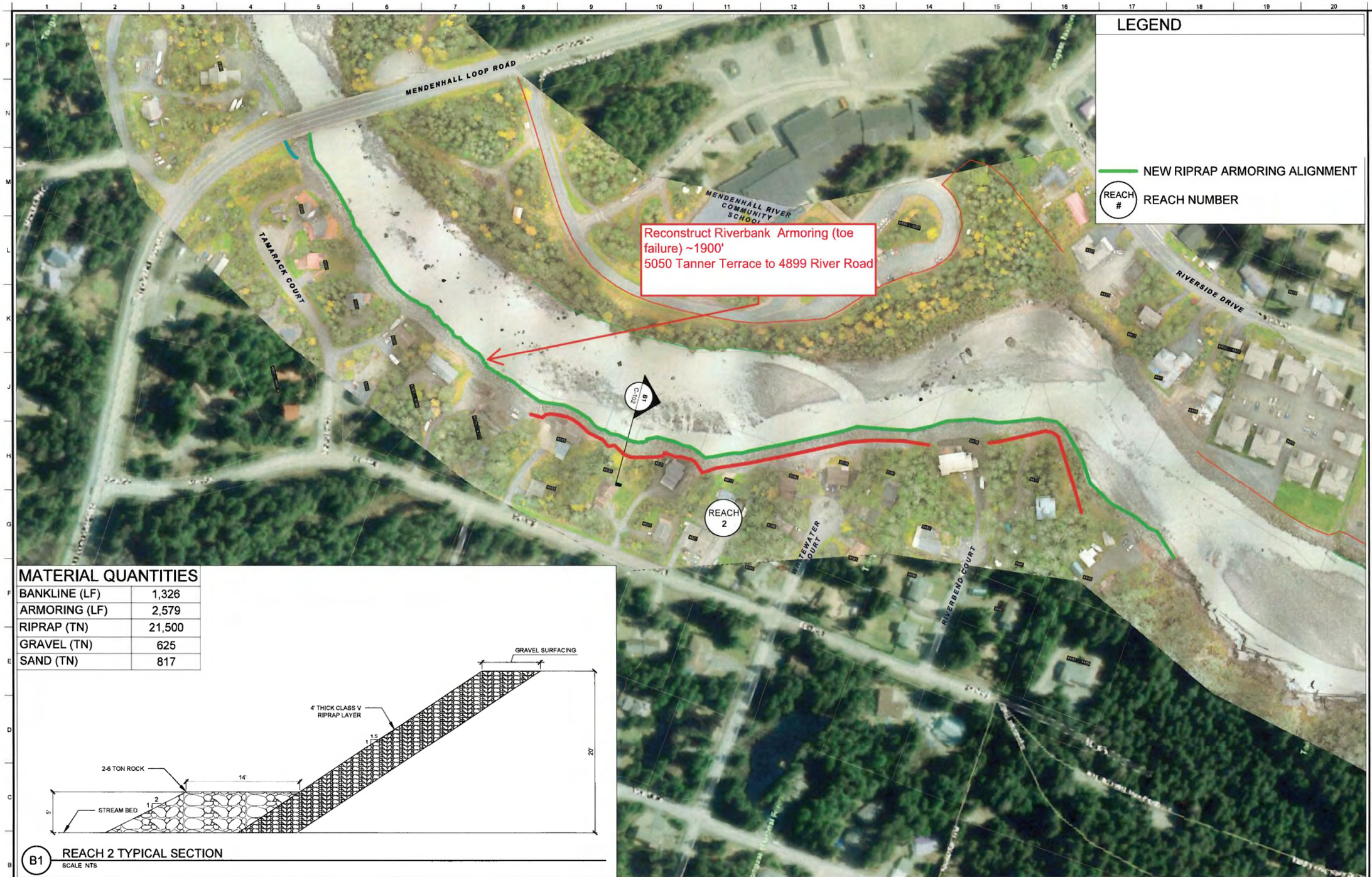

LEGEND

NEW RIPRAP ARMORING ALIGNMENT

REACH # — REACH NUMBER

MATERIAL QUANTITIES

BANKLINE (LF)	1,326
ARMORING (LF)	2,579
RIPRAP (TN)	21,500
GRAVEL (TN)	625
SAND (TN)	817

B1 REACH 2 TYPICAL SECTION
SCALE NTS

A1 REACH 2 FROM BACKLOOP BRIDGE TO RIVER ROAD (RIGHT BANK) PLAN VIEW
SCALE 1" = 100'

US Army Corps of Engineers®

MARK	DESCRIPTION	DATE

DESIGNED BY: C. IFFT
DRAWN BY: C. IFFT
CHECKED BY: A. MOOLEY
APPROVED BY: C. IFFT
SUBMITTED BY: D. DOWNING
SIZE: ANSI D
ISSUE DATE: ##########
SOLICITATION NO.: ####
CONTRACT NO.: ##########

U.S. ARMY CORPS OF ENGINEERS
SEATTLE DISTRICT
SEATTLE, WASHINGTON
##########
##
##########
##########

MENDENHALL, ALASKA
PHASE 2
##########
##########
##########
##########
##########
REACH 2 PLAN AND TYPICAL SECTION VIEW
##########

SHEET ID
##########
C-102

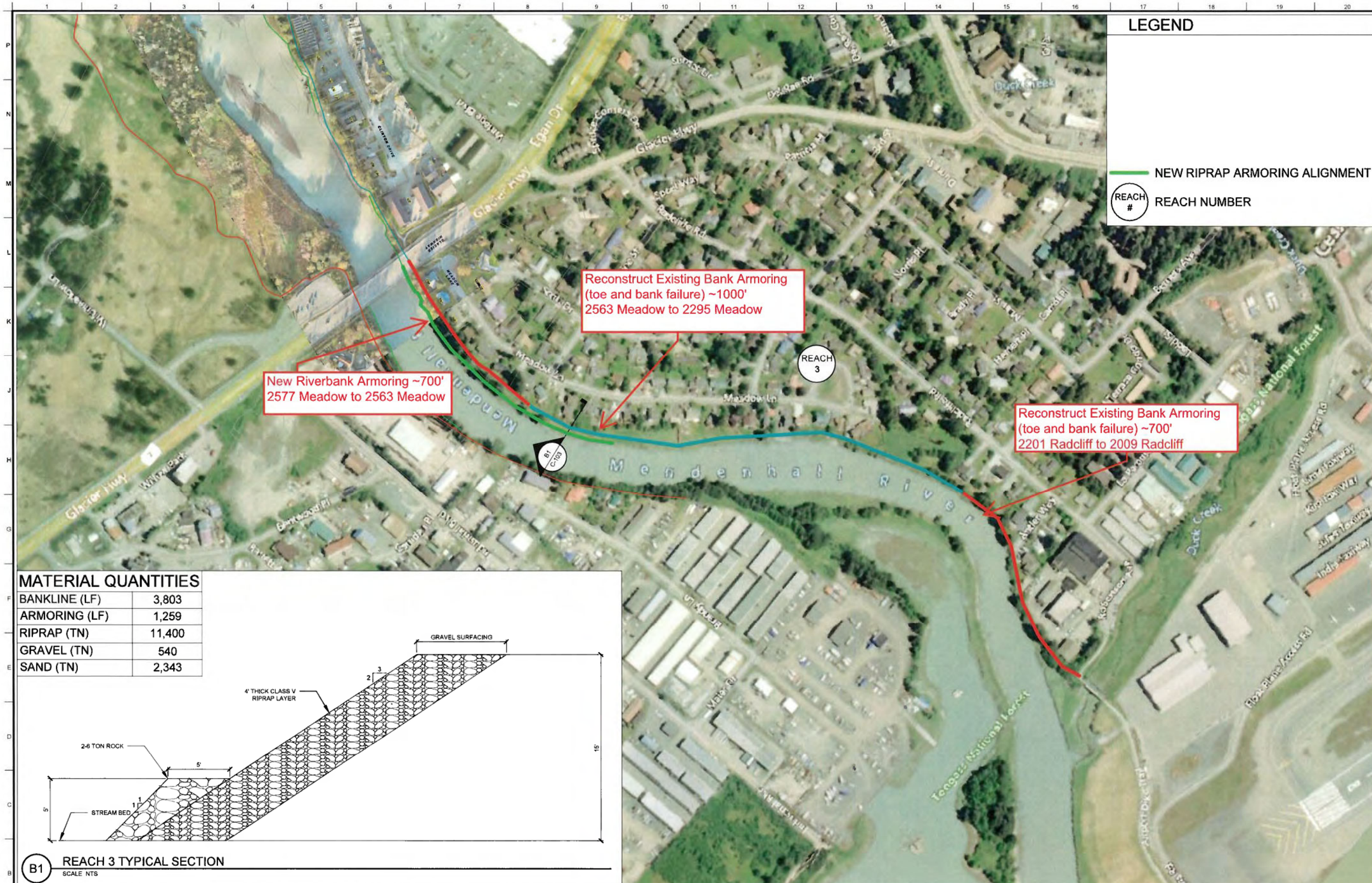

MATERIAL QUANTITIES

BANKLINE (LF)	3,803
ARMORING (LF)	1,259
RIPRAP (TN)	11,400
GRAVEL (TN)	540
SAND (TN)	2,343

B1 REACH 3 TYPICAL SECTION
SCALE NTS

A1 REACH 3 BROTHERHOOD BRIDGE DOWNSTREAM (LEFT BANK) PLAN VIEW
SCALE 1" = 200'

PLAN NORTH

0 200' 400'

US Army Corps of Engineers®

MARK	DESCRIPTION	DATE

DESIGNED BY: C. IFFT
DRAWN BY: A. WOOLLEY
CHECKED BY: C. IFFT
SUBMITTED BY: D. DOWNING
SIZE: ANSI D
ISSUE DATE: ##########
SOLICITATION NO.: ##########
CONTRACT NO.: ##########

U.S. ARMY CORPS OF ENGINEERS
ALASKA DISTRICT, PROJECT DELIVERY TEAM
SEATTLE, WASHINGTON
##########
###
##########
##########

MENDENHALL, ALASKA
##########
##########
##########
##########
REACH 3 PLAN AND TYPICAL SECTION VIEW
##########

SHEET ID
#########
C-103

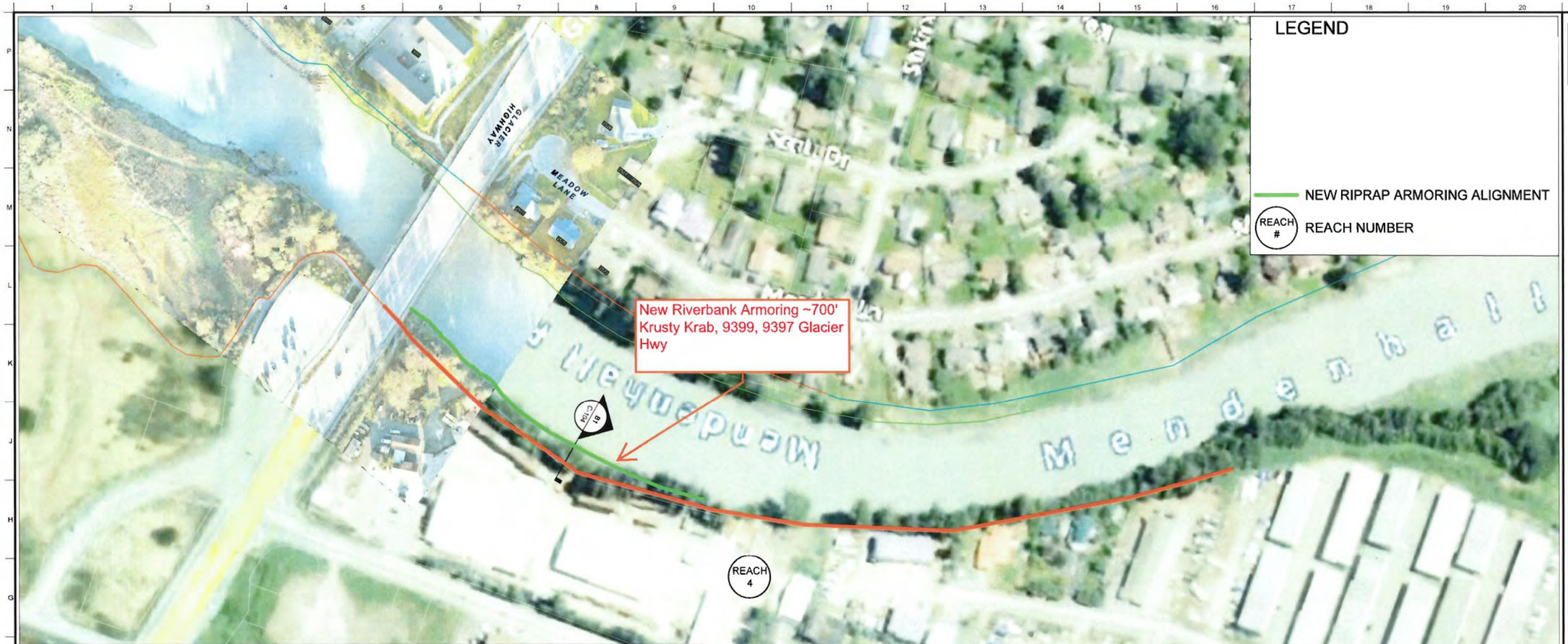

MATERIAL QUANTITIES

BANKLINE (LF)	1,788
ARMORING (LF)	686
RIPRAP (TN)	7,800
GRAVEL (TN)	300
SAND (TN)	1,102

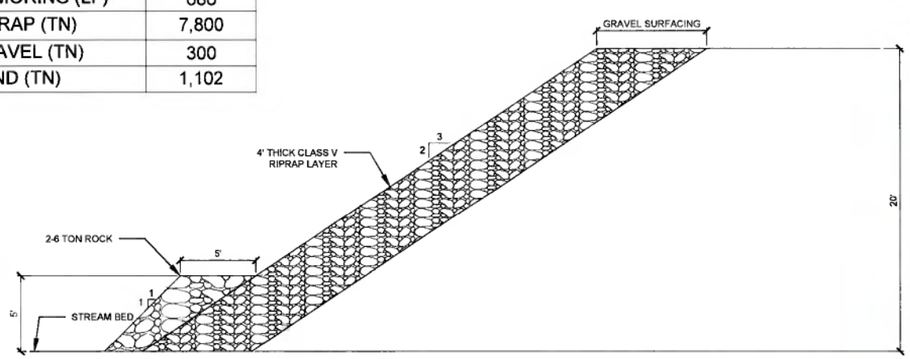

B1 REACH 4 TYPICAL SECTION
SCALE NTS

A1 REACH 4 BROTHERHOOD BRIDGE DOWNSTREAM (RIGHT BANK) PLAN VIEW
SCALE 1" = 100'

PLAN NORTH

0 100' 200'

US Army Corps of Engineers®

MARK	DESCRIPTION	DATE

DESIGNED BY: C. IFFT
DRAWN BY: A. WOOLLEY
CHECKED BY: C. IFFT
SUBMITTED BY: D. DOWNING
SIZE: ANSI D
ISSUE DATE: ##########
SOLICITATION NO.: ##########
CONTRACT NO. ##########
##########
##########
##########

U.S. ARMY CORPS OF ENGINEERS
4735 E. MARGINAL WAY S.
SEATTLE, WASHINGTON
##########
###
##########
##########

MENDENHALL, ALASKA
PHASE 2
##########
##########
##########
##########
##########
REACH 4 PLAN AND TYPICAL SECTION VIEW
##########

SHEET ID
#########
C-104

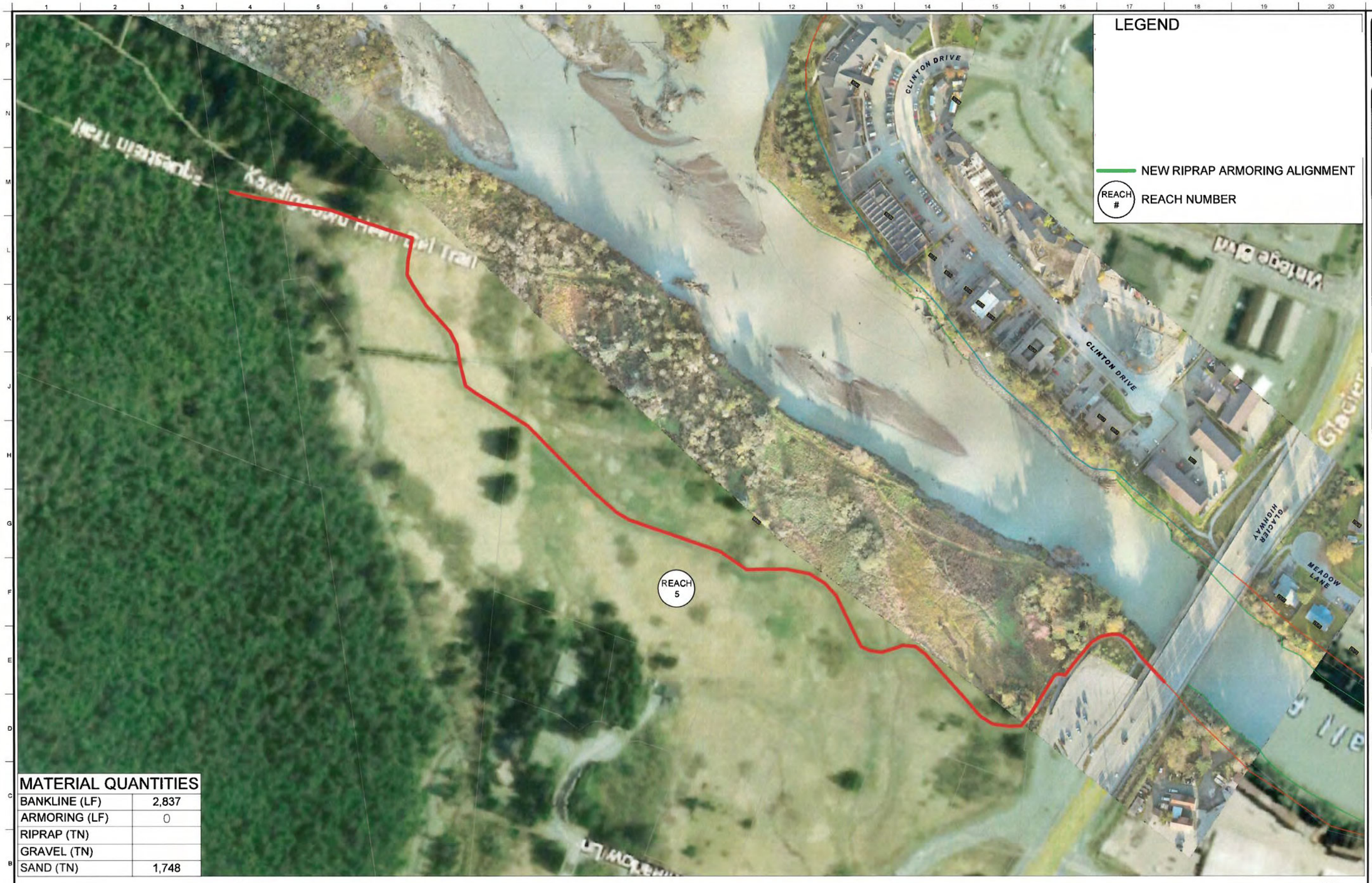

MATERIAL QUANTITIES	
BANKLINE (LF)	2,837
ARMORING (LF)	0
RIPRAP (TN)	
GRAVEL (TN)	
SAND (TN)	1,748

PLAN NORTH

0 100' 200'

A1 REACH 5 WILDMEADOW LANE (RIGHT BANK) PLAN VIEW
SCALE 1" = 100'

US Army Corps of Engineers®

MARK	DESCRIPTION	DATE

DESIGNED BY: C. IFFT
DRAWN BY: A. WOOLLEY
CHECKED BY: C. IFFT
SUBMITTED BY: D. DOWNING
SIZE: ANSI D
ISSUE DATE: ##########
SOLICITATION NO.: ##########
CONTRACT NO.: ##########

U.S. ARMY CORPS OF ENGINEERS
SEATTLE DISTRICT
SEATTLE WASHINGTON
##########
##########
##

MENDENHALL, ALASKA
##########
##########
##########
##########
##########
##########
REACH 5 PLAN VIEW
##########

SHEET ID
#########
C-105

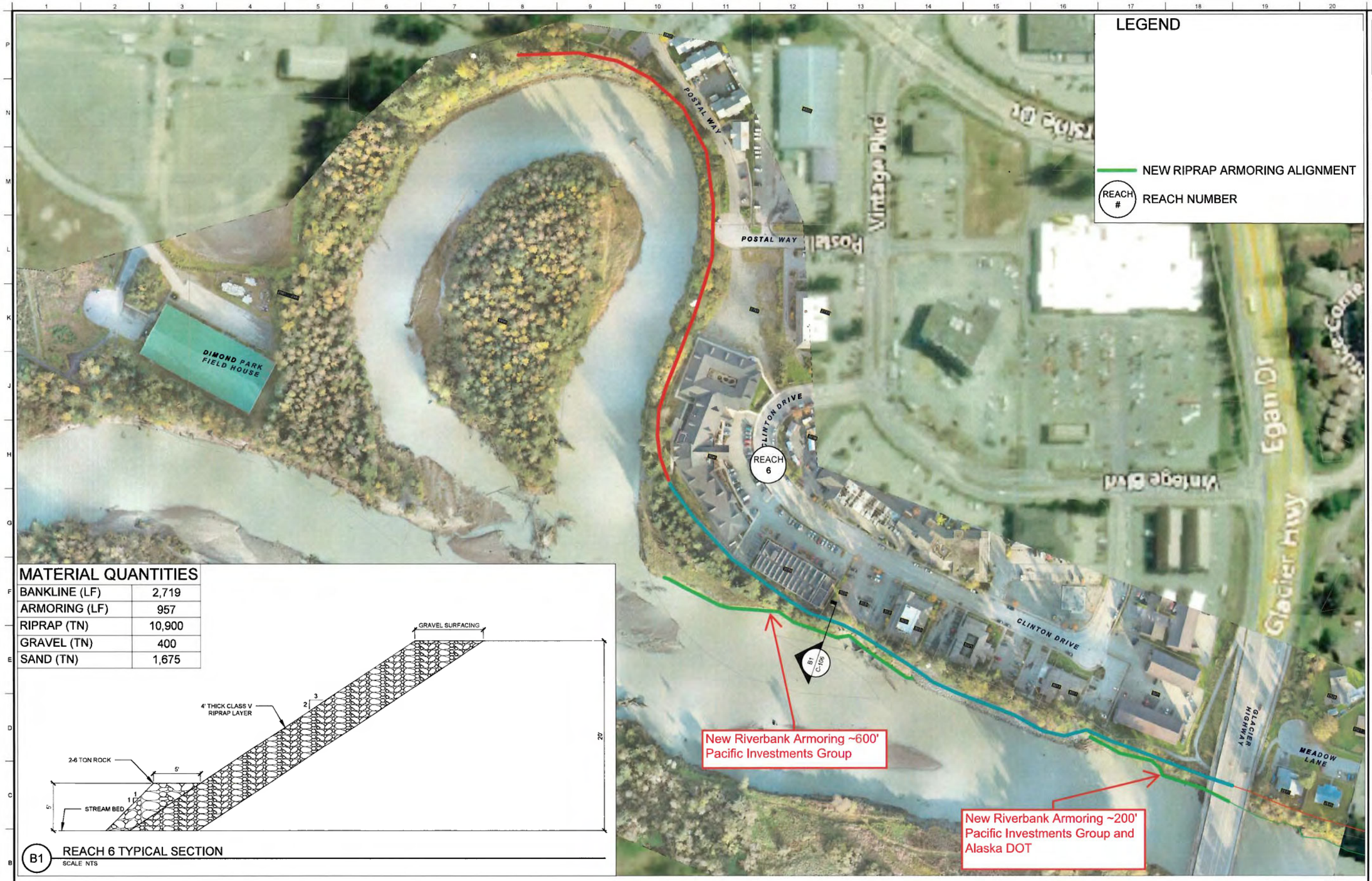

MATERIAL QUANTITIES

BANKLINE (LF)	2,719
ARMORING (LF)	957
RIPRAP (TN)	10,900
GRAVEL (TN)	400
SAND (TN)	1,675

B1 REACH 6 TYPICAL SECTION
SCALE NTS

A1 REACH 6 PHASE 1B (LEFT BANK) PLAN VIEW
SCALE 1" = 100'

US Army Corps of Engineers®

MARK	DESCRIPTION	DATE

DESIGNED BY: C. IFFT
DRAWN BY: A. WOOLLEY
CHECKED BY: C. IFFT
SUBMITTED BY: D. DOWNING
SIZE: ANSI D
ISSUE DATE: ##########
SOLICITATION NO.: ##########
CONTRACT NO.: ##########

U.S. ARMY CORPS OF ENGINEERS
POST OFFICE BOX 3755
SEATTLE, WASHINGTON
##########

##########
###
##########
##########

MENDENHALL, ALASKA
PHASE 2
##########
##########
##########

REACH 6 PLAN AND TYPICAL SECTION VIEW
##########

SHEET ID
########
C-106