STATE OF ALASKA ITB NUMBER 2026-1100-0041
AMENDMENT NUMBER 3

Department of Fish and Game
Division of Administrative Services

THIS IS NOT AN ORDER **DATE AMENDMENT ISSUED: 8/14/2025**

ITB TITLE: 2025 RV Kestrel Shipyard Services

ITB OPENING DATE AND TIME: August 20, 2025 (2:00 PM AKST)

This amendment serves to respond to the following questions submitted by potential bidders:

Q1. Work Item 15 states "Contractor shall remove and install three (3) new saltwater butterfly valves for the engine cooling system." However, following this statement, the specification states "All butterfly valves for entire cooling system shall be replaced with new." Please clarify if all valves (6ea) are to be replaced or only the three for the port side.

a. In addition, work item 3.4 Butterfly valves states to inspect and service 6ea butterfly valves. After review of the Engine Cooling System drawings, we concluded these are likely the same valves indicating replacement. KTR recommends re-writing the spec to only include the throttling valve or updating the Butterfly valve count to "3" total contingent on the answer above.

A1: Please see following sections with edits to the ITB.

Q2: We request any drawings and/or tech pubs associated with the bowthruster system?

A2: Please see images attached to this amendment.

This amendment also serves to make the following changes/edits:

Section 2. Scope of Work and Contract Information – Invitation to Bid RV Kestrel Shipyard Work Item Details – Item 15. <u>WELD 4" COPPER NICKLE PIPE, REPLACE BUTTERFLY VALVES:</u>

References

- ***F*** *Bilge, Ballast, and Fire Schematic Drawing No. 039-200*
- *Photos*

The 4" Round Main Saltwater Cooling Copper Nickle Pipe was previously cut to shorten the length of the cooling pipe. A 4" Straub Stainless Grip-L pipe coupling with part number 20825, is installed over cut on pipe. The Straub Pipe coupling is to be given to Owner Representative after removal.

STATE OF ALASKA ITB NUMBER 2026-1100-0041
AMENDMENT NUMBER 3

Contractor shall remove and install two new 4" butterfly valves, two new 2" butterfly valve for Auxiliary Engines, and two new 2 ½" butterfly valve for Main Engines. Total of six valves.

Contractor shall weld the 4" Round Main Saltwater Cooling Copper Nickle Pipe back together. All Work shall be done in place and in Engine Room (confined space).

Work Item 3.4 (page 12) - You can remove the work for the six butterfly valves as they are mentioned to be removed and replaced with new under work item 15. Work item 3.4 is changed to:

3.4 Main Engine Sea Water Throttling Valves

Remove and rebuild two (2) sea water throttling valves for main engine saltwater cooling. Each throttling valve is set to a certain adjustment for water flow/pressure. Contractor shall record the valve setting before rebuilding and ensure it is set back to original adjustment before installing.

- ***E*** *Engine Cooling Schematic Drawing No. 039-202*

All other terms and conditions remain unchanged.

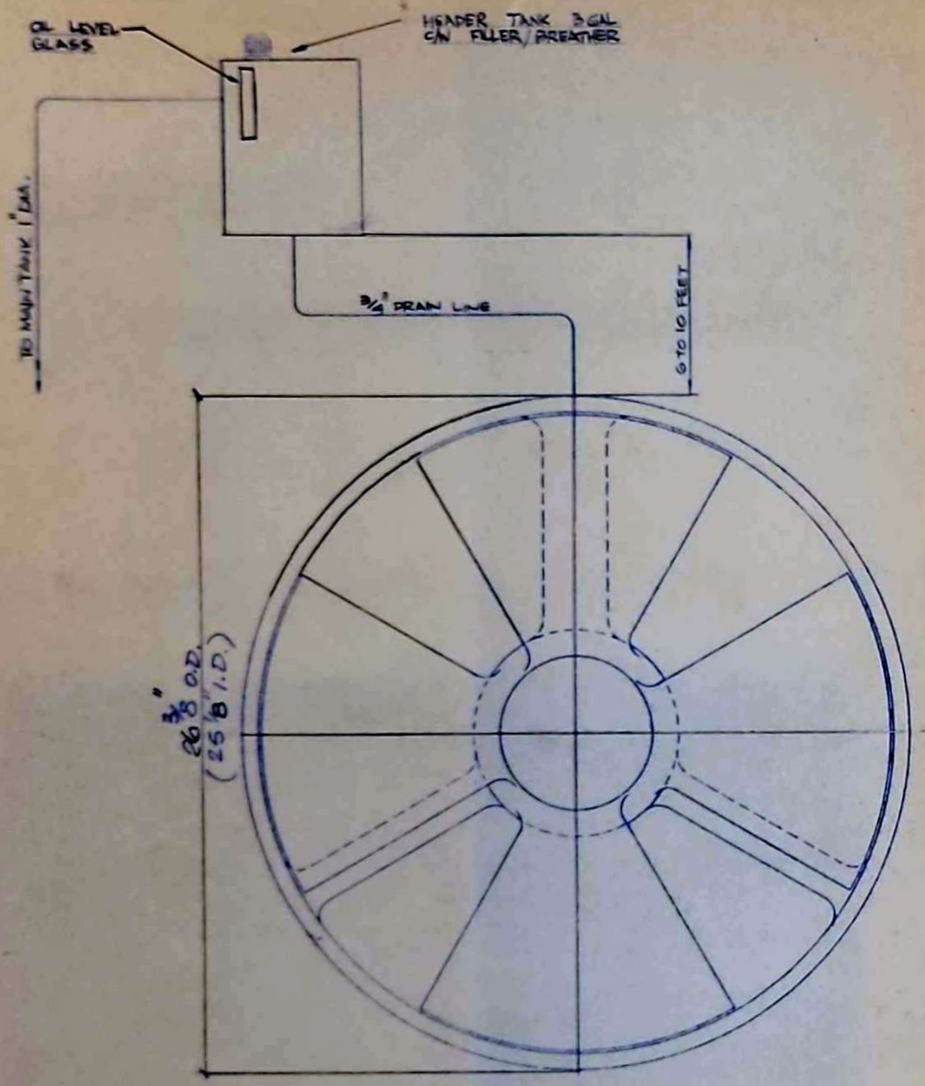

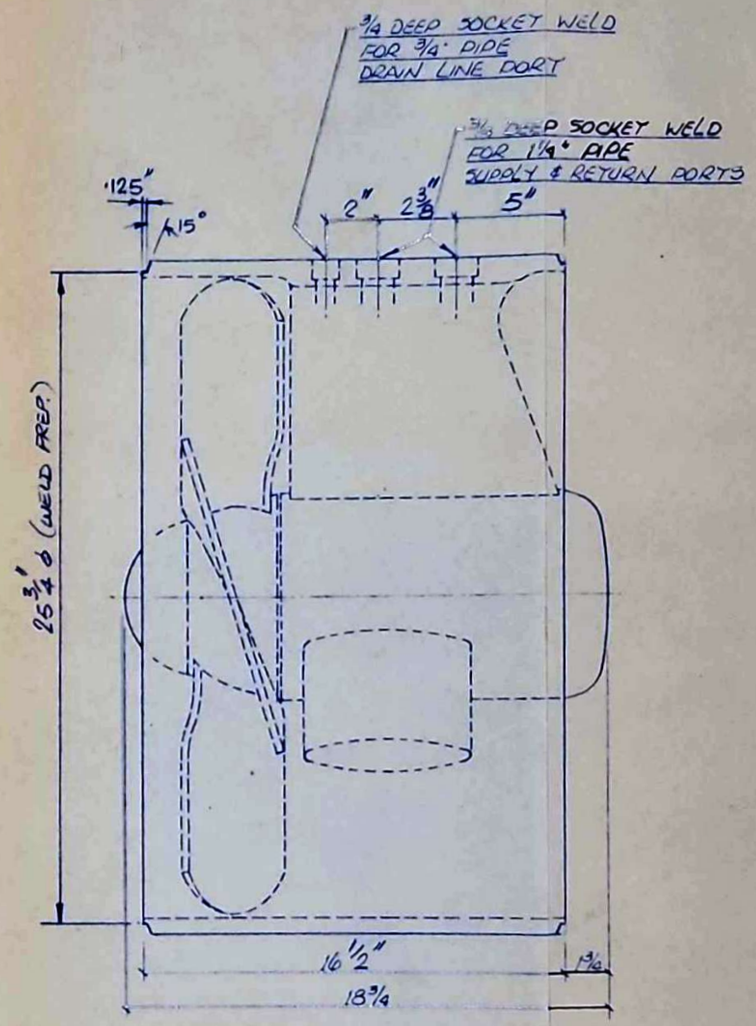

SPECIFICATIONS

[illegible] LBS THRUST - 75 U.S. GPM. AT 2,000 PSI.
[illegible] LBS THRUST - 54 U.S. GPM. AT 1,250 PSI.

WESTEC EQUIPMENT LTD.	
TITLE: HYDRAULIC SIDE THRUSTER MODEL No ST26	
DWG BY: D.R.H.	DATE: JULY 1980
SCALE: 3/8	REV:
DWG No: D-1001	

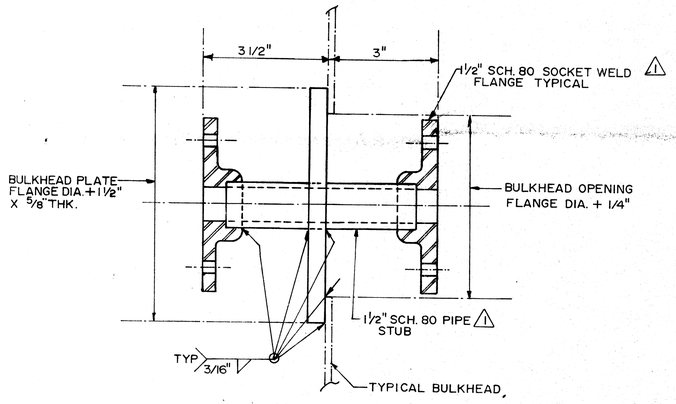

BULKHEAD PIECE

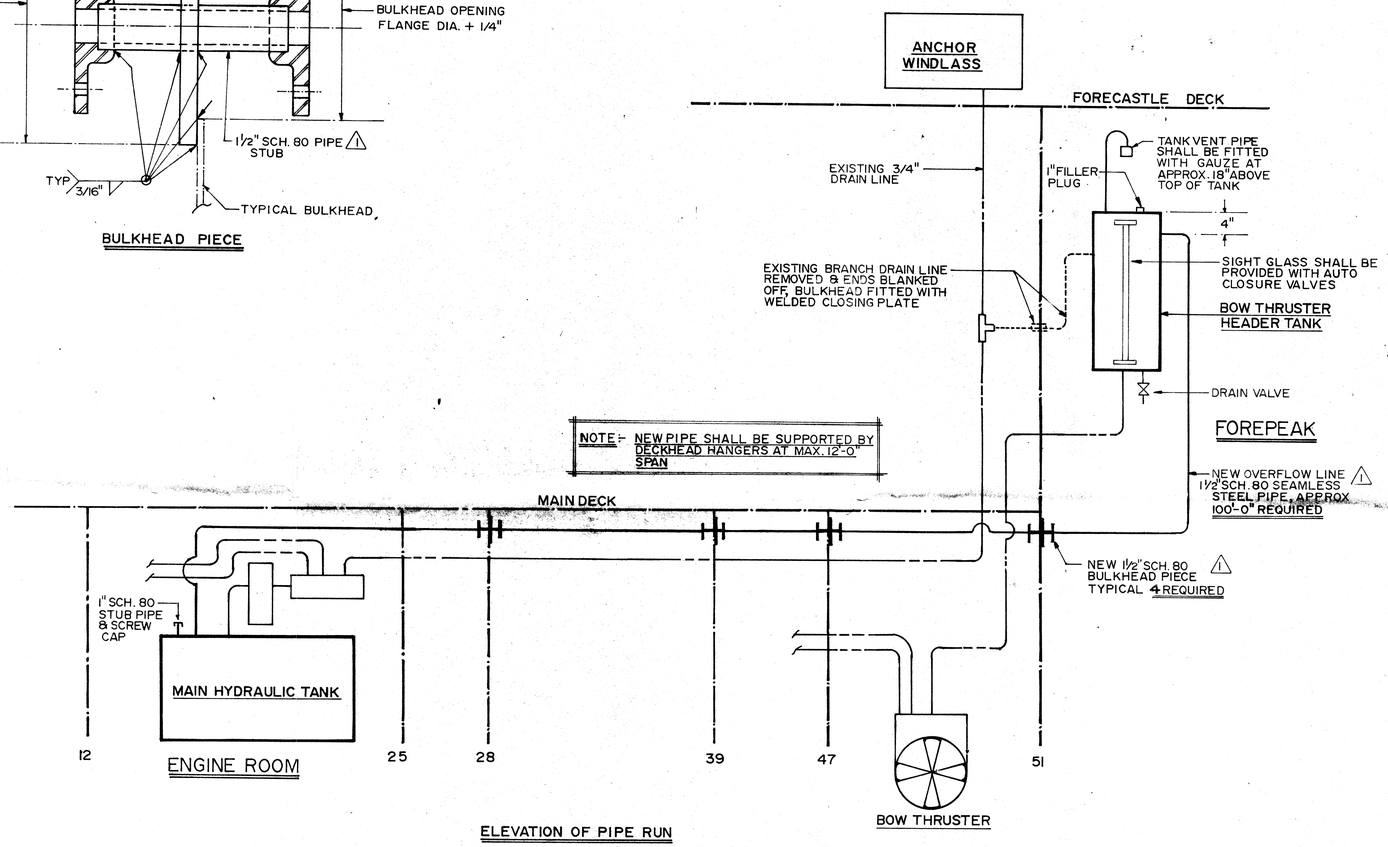

ELEVATION OF PIPE RUN

GENERAL NOTES

1 MODIFICATIONS TO EXISTING PIPING AND FITTINGS, AND INSTALLATION OF NEW PIPING AND FITTINGS SHALL BE CARRIED OUT TO THE SATISFACTION OF THE PWGSC INSPECTOR

2 FLANGE CONNECTIONS AT BULKHEADS AND ASSOCIATED PIPE ENDS SHALL BE BOLTED, ALL OTHER CONNECTIONS AND FITTINGS SHALL BE WELDED.

3 ALL NEW PIPING, FLANGES, FITTINGS ETC, SHALL BE PRIMED AND PAINTED AFTER INSTALLATION WITH "INTERPRIME CP A0978" GRAY @ 75 microns AND FINISH COAT OF MARINE ALKYD ENAMEL EXTERIOR GLOSS (CGSB 1-GP-61) @ 30 microns.

4 WHERE IT IS REQUIRED THAT EXISTING LININGS, INSULATION, PARTITION BULKHEADS ETC. ARE DISTURBED, CARE SHALL BE EXERCISED TO MAINTAIN REPAIR TO A MINIMUM LEVEL, ON COMPLETION OF INSTALLATION ALL DISTURBED AREAS SHALL BE REPAIRED TO ORIGINAL CONDITION.

5 ON COMPLETION OF INSTALLATION ALL WORK AREAS SHALL BE CLEANED TO THE SATISFACTION AND APPROVAL OF THE PWGSC INSPECTOR.

MARK	ZONE	REVISION	DATE
1	ALL	DWG. MODIFIED TO REFLECT C.S.I. CHANGES	15-04-95

HULLTECH MARINE
VICTORIA B.C.

DIV.

OWNER: DEPARTMENT OF FISHERIES AND OCEANS

TITLE: M.V. "R.B.YOUNG"
HYDRAULIC OIL PIPING SYSTEM MODS.
(BOW THRUSTER HEADER TANK OVERFLOW)

			APPROVAL			
DESIGNED	R.M.		LLOYDS			
DRAWN	A.F.	04/95	C.C.G.S.S.	G. J.K.	14-04-95	
CHECKED			OWNER			
APPROVED						

PROJECT No. 95-03-DOE
SCALE NOT TO SCALE

PD55-76-90

BOW THRUSTER CIRCUIT

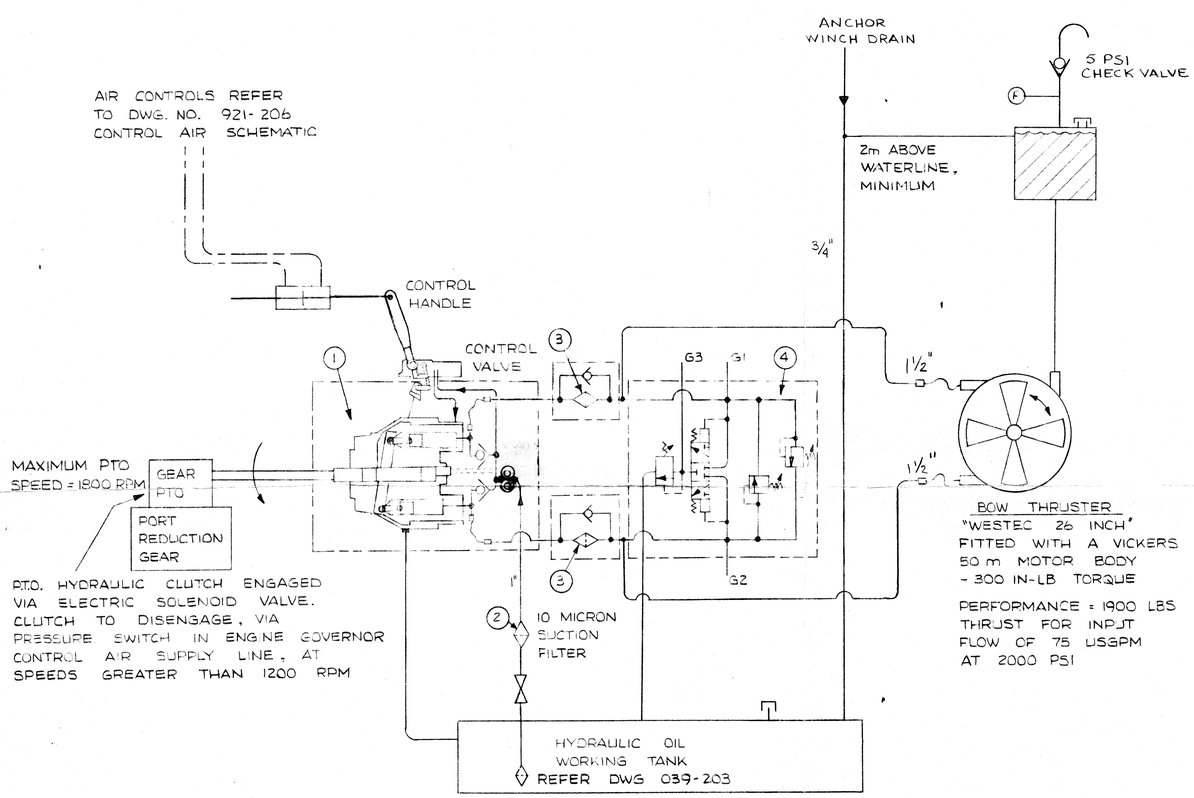

ITEM	QTY	DESCRIPTION / MODEL	MAKE SUPPLIER
1	1	VARIABLE DISPLACEMENT + DIRECTION HYDRAULIC PUMP - SUNDSTRAND 25 SERIES C/W AIR OPERATING CYLINDER.-53 GPM @ 1200 RPM	SUNDSTRAND/ FLECKS
2	1	SUCTION FILTER MODEL GA 90/ ST-3 -100	FAIREY/ FLECKS
3	2	PRESSURE FILTER MODEL 372A- 2L50 - SL - 210	FAIREY/ FLECKS
4	1	HYDROSTATIC TRANSMISSION VALVE C/W CROSS PORT RELIEF + BLEED OFF LINE. MODEL YRGH - LCN - AM	SUN / FLECKS

MATERIAL. -

PRESSURE LINES - 1½" SCH 80 BLACK SEAMLESS STEEL PIPE SOCKET WELD FITTINGS

DRAIN LINES - ¾" SCH 40 BLACK STEEL PIPE

A-FRAME CIRCUIT

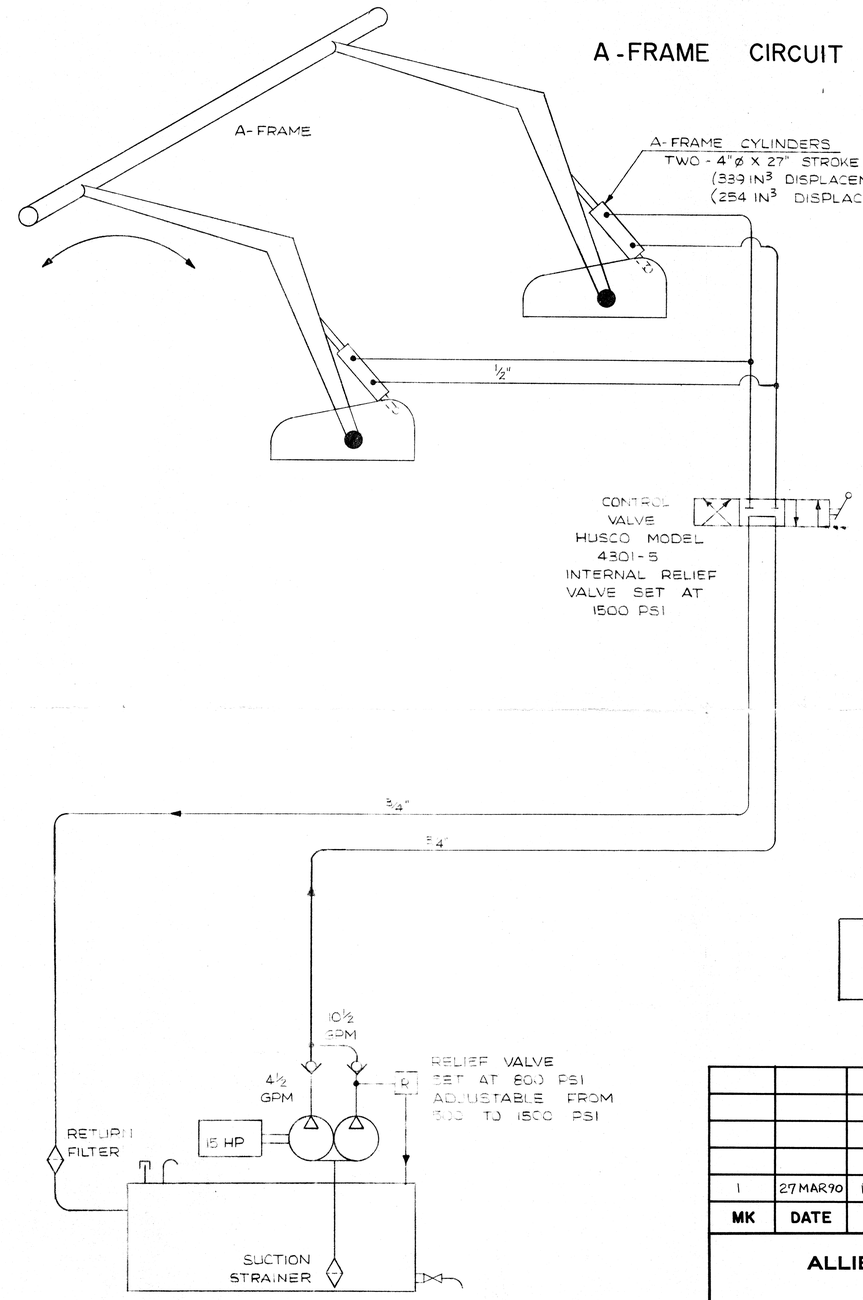

A-FRAME OPERATING TIME

A/ TIME TO EXTEND COMPLETELY AT 800 PSI PRESSURE OR LESS

$$\frac{\left[2(339) \times \frac{7.48}{1728}\right] \text{GAL}}{15 \ \frac{\text{GAL}}{\text{MIN}}}$$

= 0.20 MINUTES
= 12 SECONDS

B/ TIME TO RETRACT COMPLETELY AT 800 PSI PRESSURE OR LESS

$$\frac{\left[2(254) \times \frac{7.48}{1728}\right] \text{GAL}}{15 \ \frac{\text{GAL}}{\text{MIN}}}$$

= 0.15 MINUTES
= 9 SECONDS

POWER PACK

15 HP / 230 V / 3ø / 1800 RPM / TEFC FRAME ELECTRIC MOTOR DRIVING A VICKERS MODEL V2010-2 F7S3-1CC DOUBLE VANE PUMP.
TOTAL OIL FLOW @ 1800 RPM = 15 GPM

AS FITTED

ISSUED

MAY 15 1990

ALLIED SHIPBUILDERS LTD.

MK	DATE	REVISION
1	27MAR90	REVISE TO "AS FITTED"

ALLIED SHIPBUILDERS LTD.
NORTH VANCOUVER, CANADA

DEPARTMENT OF FISHERIES AND OCEANS
OTTAWA, CANADA

HULL 250 "R.B. YOUNG"
HYDRAULIC PIPING SCHEMATIC - THRUSTER & A-FRAME

DRAWN BY	M. McL, A2	APPROVED BY	
DATE	JULY 17, 1989	APPROVED BY	
SCALE	NTS	APPROVED BY	
DESIGN NO.	921	DRG. NO.	039 - 204

PSD55-25-90

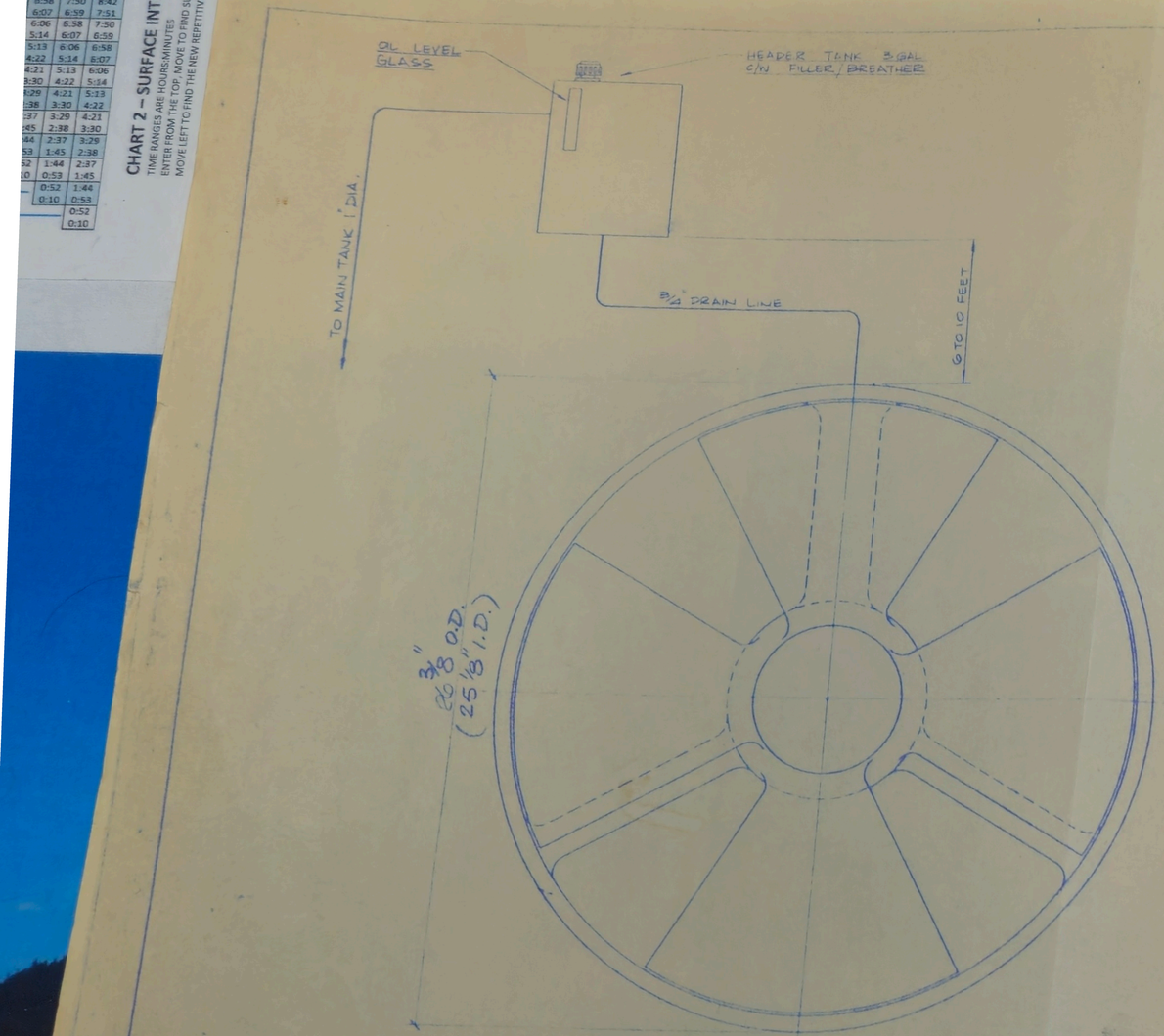

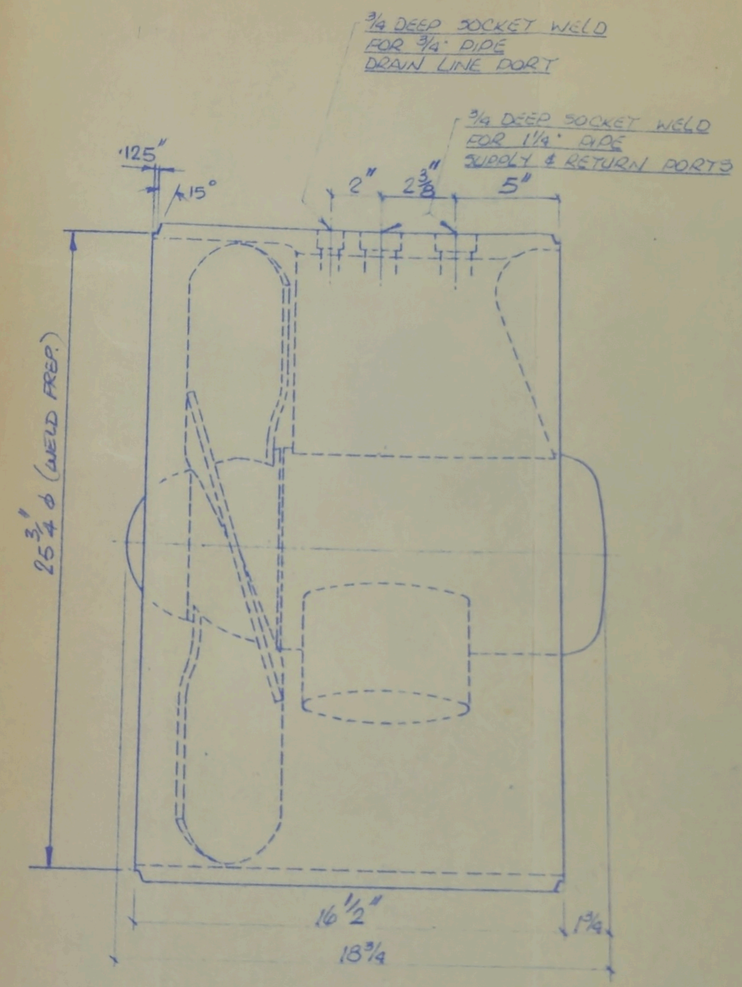

SPECIFICATIONS

2,000 LBS THRUST - 75 U.S. GPM AT 2,000 PSI.
1,250 LBS THRUST - 54 U.S. GPM AT 1,250 PSI.

WESTEC EQUIPMENT LTD.	
TITLE: HYDRAULIC SIDE THRUSTER MODEL Nº ST66	
DWG BY: D.F.H.	DATE: JULY 1980
SCALE: 3/8	REV.
DWG Nº D-1001	

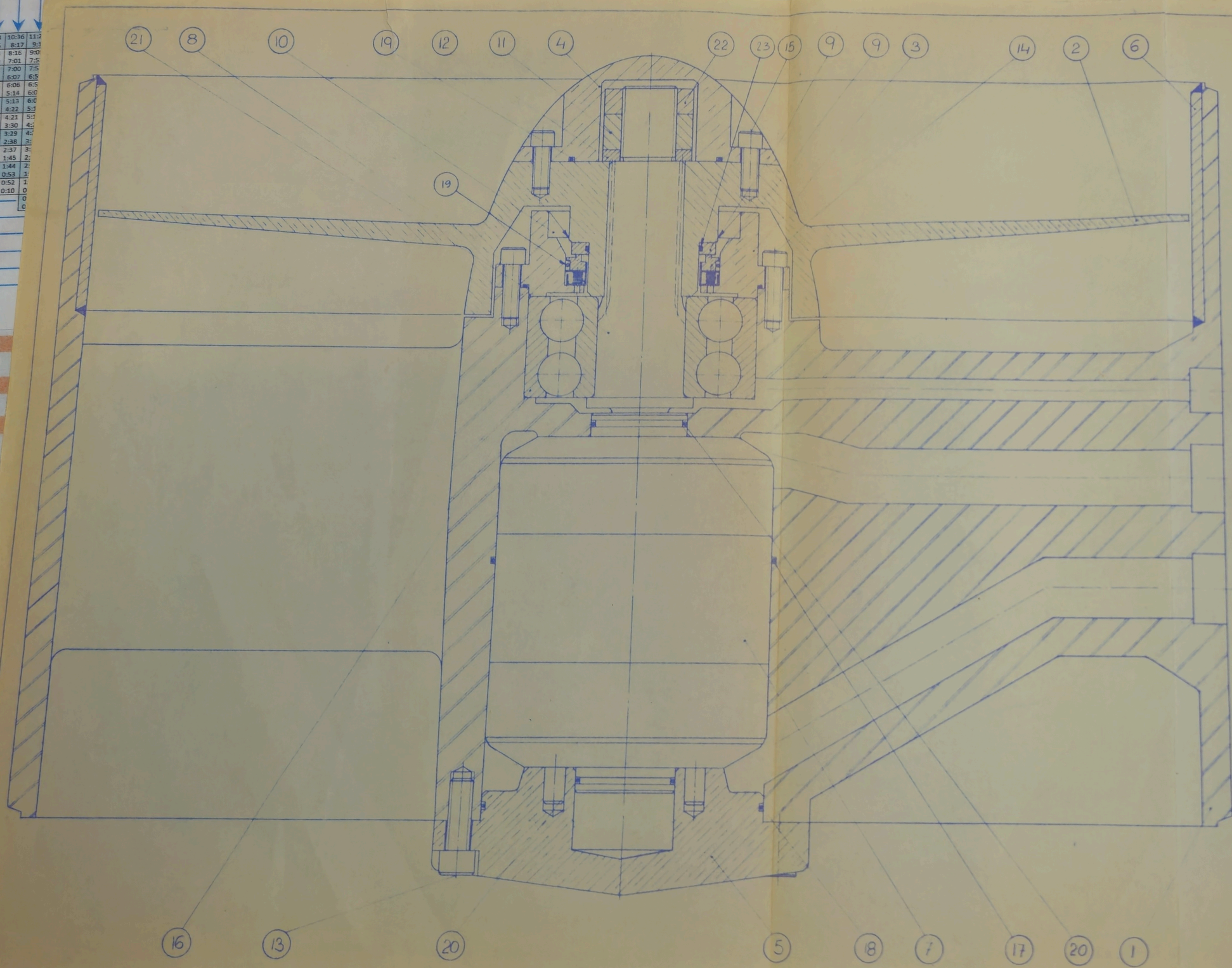

Rev	Revision Scope	By	Date
Rev A	Item 22 added	E Ch	May 83

Item	Qty	Description	Size	Material
23	1	O' Ring	2 7/8 x 2 3/8 x 3/16 x 144	Nitrile
22	1	Jam Nut	1 1/4" 12 UNF	B.S. 216
21	1	O' Ring	5 11/16" x 5" x 3/32" x 159	Nitrile
20	2	O' Ring	2 7/8" x 1 11/16" x 3/16 x 225	Nitrile
19	2	O' Ring	3 3/8" x 3 1/4" x 1/8 x 236	Nitrile
18	1	O' Ring	6" x 5 7/8" x 1/8 x 266	Nitrile
17	1	O' Ring	6 1/4" x 6" x 1/8 x 268	Nitrile
16	1	Ball Bearing	50 x 110 x 27 x 5410	SKF
15	6	Steel H.C. Screw	3/8" UNC x 1" lg	B.S. 216
14	10	Steel H.C. Screw	3/8" UNC x 1 1/2" lg	B.S. 216
13	10	Steel H.C. Screw	1/2" UNC x 1 1/2" lg	Normal
12	1	Flat Washer	1 1/4" bore	B.S. 216
11	1	Nut	1 1/4" 12 UNF	B.S. 216
10	1	Nylon shaft seal	88 x 110 x 15	
9	1	Neck Bronze Seal & Wear runner		
8	1	Drive Shaft	B=88	
7	1	Cartridge	422 151 - 8014	
6	1	St Steel O.ring	5 1/4" x 1/8" rated	B.S. 216
5	1	End Cover	Casting # 121 C 82	Bronze
4	1	Cap	Casting # 286 C 118	Bronze
3	1	Seal Housing	Casting # 286 C 118	Bronze
2	1	Propeller	Casting # 282 B 2015	Bronze
1	1	Housing	Casting # 22 B 1246	M.S. 1020

WESTEC EQUIPMENT LTD

HYDRAULIC SIDE THRUSTER
MODEL Nº TT 26

E.Ch. February 82

DA 1059 | A

Rev A | Item 22 added

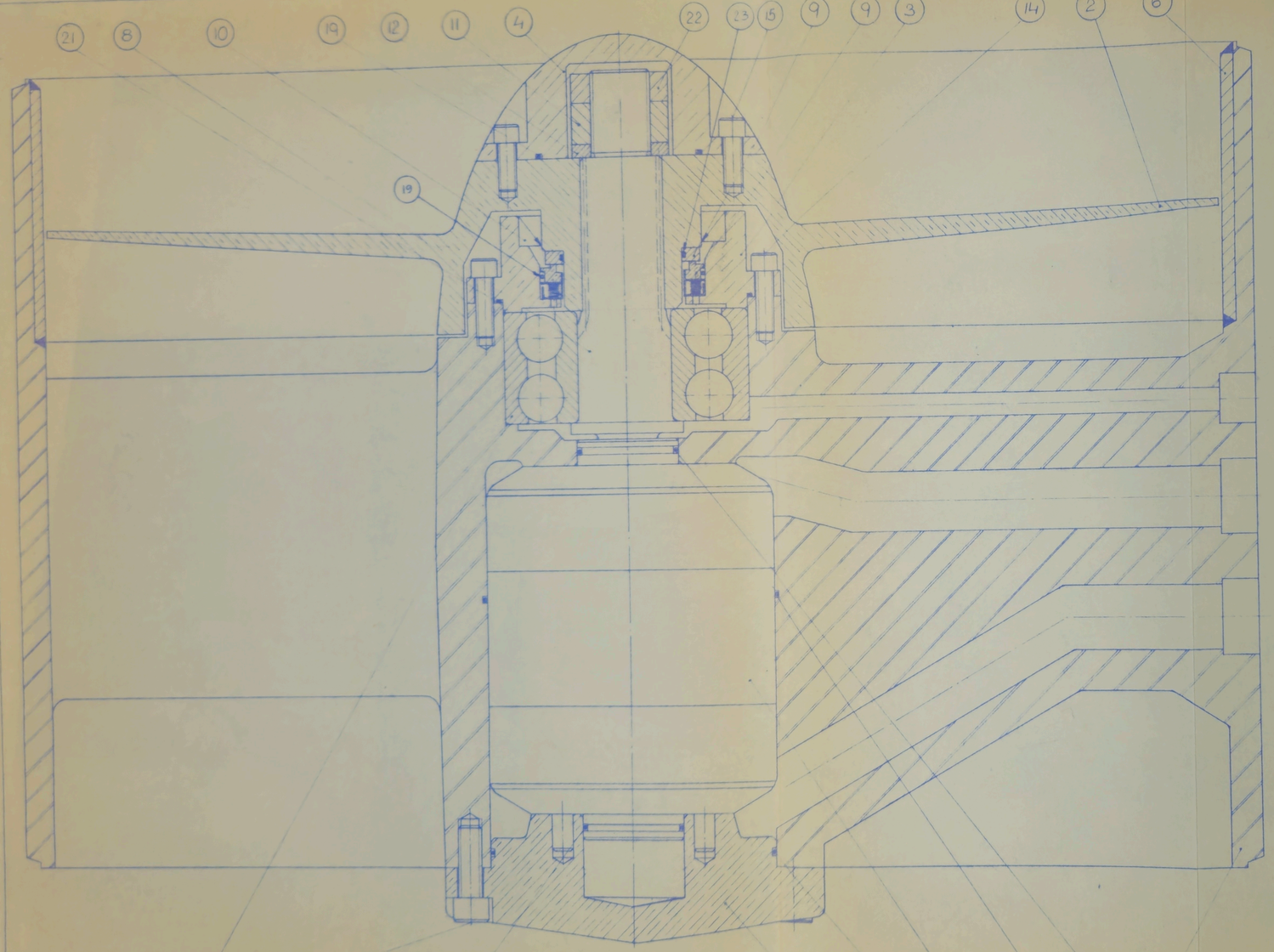

Item	Qty	Description	Size	Material
23	1	O' Ring	2 11/16 x 2 1/2 x 3/16 # 144	National
22	1	Jam Nut	1 1/4" 12 UNF	S.S 316
21	1	O'Ring	5 11/16" x 5" x 3/32" # 159	National
20	2	O'Ring	2 1/8" x 1 3/8" x 1/8" # 225	National
19	2	O'Ring	3 3/4" x 3 1/4" x 1/8 # 236	National
18	1	O'Ring	6" x 5 3/4" x 1/8 # 256	National
17	1	O'Ring	6 1/4" x 6" x 1/8 # 258	National
16	1	Ball Bearing	50 x 120 x 58 # 5410	SKF
15	6	Soct H C Screw	3/8" UNC x 1" Lg	St S 316
14	10	Soct H C Screw	3/8" UNC x 1 1/4" Lg	St S 316
13	10	Soct H C Screw	1/2" UNC x 1 1/2" Lg	Monel
12	1	Flat Washer	1 1/4" bore	St S 316
11	1	Nut	1 1/4" - 12 UNF	St S 316
10	1	M 600 shaft seal	85 x 70 x 15	
9	1	Neck Bronze Seal 7/8 Nr runner		
8	1	Drive Shaft	B-1133	
7	1	Cartridge	423101-501H	
6	1	St Steel Ring	5 1/4" x 1/4" rated	St S 316
5	1	End Cover	Casting # 171 C 1117	Bronze
4	1	Cap	Casting # 286 C 1119	Bronze
3	1	Seal Housing	Casting # 285 C 1118	Bronze
2	1	Propeler	Casting # 287 D1245	Bronze
1	1	Housing	Casting # 02 D1242	HS1020

WESTEC EQUIPMENT LTD
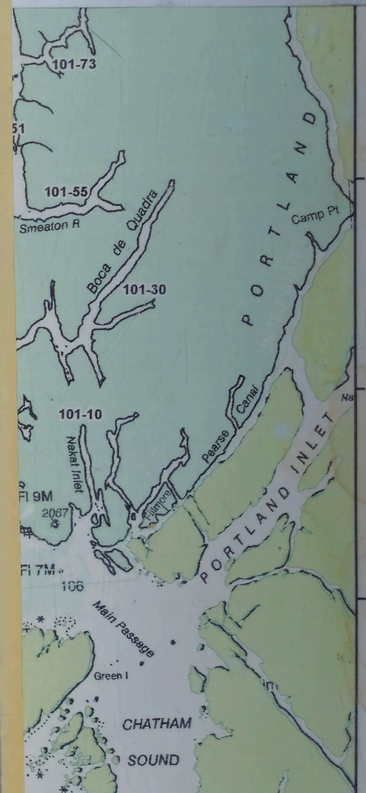
HYDRAULIC SIDE THRUSTER
MODEL Nº TT 26