ALASKA ENERGY AUTHORITY
RURAL ENERGY GROUP
813 W. NORTHERN LIGHTS BLVD.
ANCHORAGE, ALASKA 99503
HTTP://WWW.AIDEA.ORG

AKIAK GENERATOR SWITCHGEAR
ALASKA ENERGY AUTHORITY PURCHASE ORDER No. REG-12-058
CONTROLLED POWER, INC. JOB No. 7455

DRAWING No.	DRAWING TITLE
7455-2101-D	COVER SHEET
7455-3101-D	SCHEMATIC LEGEND AND NOTES
7455-4101-D	GENERATOR SWITCHGEAR ELEVATION VIEW, OUTLINE DIAGRAM
7455-5101-D	GENERATOR SINGLE LINE, SCHEMATIC DIAGRAM
7455-5201-D	GENERATOR 1 AC THREE LINE, SCHEMATIC DIAGRAM
7455-5202-D	GENERATOR 2 AC THREE LINE, SCHEMATIC DIAGRAM
7455-5203-D	GENERATOR 3 AC THREE LINE, SCHEMATIC DIAGRAM
7455-5204-D	GENERATOR 3 AC THREE LINE, SCHEMATIC DIAGRAM
7455-5205-D	MASTER AC THREE LINE, SCHEMATIC DIAGRAM
7455-5206-D	VFD AC THREE LINE, SCHEMATIC DIAGRAM
7455-5301-D	GENERATOR 1 DC CONTROL, SCHEMATIC DIAGRAM
7455-5302-D	GENERATOR 1 DC CONTROL, SCHEMATIC DIAGRAM
7455-5303-D	GENERATOR 1 DC CONTROL, SCHEMATIC DIAGRAM
7455-5304-D	GENERATOR 2 DC CONTROL, SCHEMATIC DIAGRAM
7455-5305-D	GENERATOR 2 DC CONTROL, SCHEMATIC DIAGRAM
7455-5306-D	GENERATOR 2 DC CONTROL, SCHEMATIC DIAGRAM
7455-5307-D	GENERATOR 3 DC CONTROL, SCHEMATIC DIAGRAM
7455-5308-D	GENERATOR 3 DC CONTROL, SCHEMATIC DIAGRAM
7455-5309-D	GENERATOR 3 DC CONTROL, SCHEMATIC DIAGRAM
7455-5310-D	GENERATOR 4 DC CONTROL, SCHEMATIC DIAGRAM
7455-5311-D	GENERATOR 4 DC CONTROL, SCHEMATIC DIAGRAM
7455-5312-D	GENERATOR 4 DC CONTROL, SCHEMATIC DIAGRAM
7455-5313-D	MASTER DC CONTROL, SCHEMATIC DIAGRAM
7455-5314-D	MASTER DC CONTROL, SCHEMATIC DIAGRAM
7455-5315-D	MASTER DC CONTROL, SCHEMATIC DIAGRAM
7455-5316-D	MASTER DC CONTROL, SCHEMATIC DIAGRAM
7455-5317-D	FEEDER DC CONTROL, SCHEMATIC DIAGRAM
7455-5318-D	VFD DC CONTROL, SCHEMATIC DIAGRAM
7455-5319-D	VFD DC CONTROL, SCHEMATIC DIAGRAM
7455-5401-D	FEEDER BREAKER CONTROL, SCHEMATIC DIAGRAM
7455-5501-D	PLC COMMUNICATION, SCHEMATIC DIAGRAM
7455-5502-D	PLC COMMUNICATION, SCHEMATIC DIAGRAM
7455-5601-D	COMMUNICATION NETWORK DIAGRAM
7455-5602-D	COMMUNICATION NETWORK DIAGRAM
7455-5701-D	HEATER, LIGHTING & FAN CONTROL, SCHEMATIC DIAGRAM
7455-6101-D	CONTROL SWITCH TARGET DIAGRAM
7455-6201-D	NAMEPLATE ENGRAVING SCHEDULE, FABRICATION DIAGRAM
7455-6202-D	ANNUNCIATOR WINDOWS, FABRICATION DIAGRAM
7455-7101-D	INTERCONNECTION DIAGRAM
7455-7102-D	INTERCONNECTION DIAGRAM

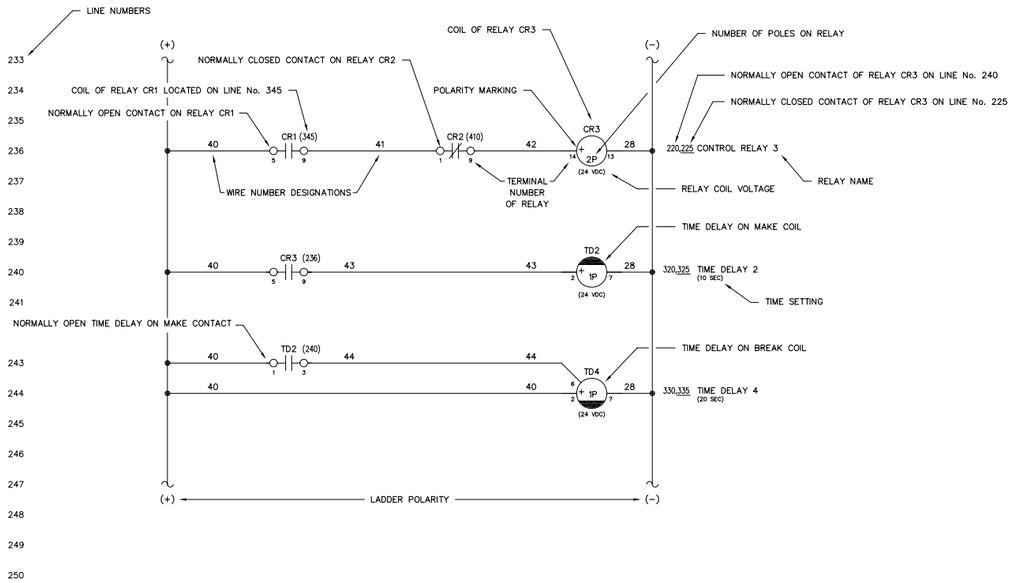

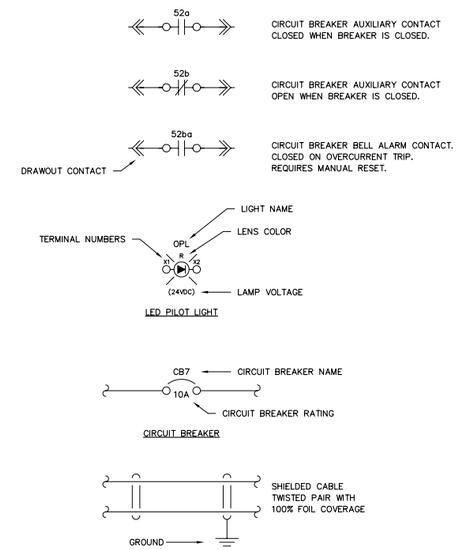

NOTES:

1. SCHEMATIC IS SHOWN AS FOLLOWS:
   - ALL AC AND DC POWER REMOVED
   - ALL RELAY CONTACTS DE-ENERGIZED
   - ALL CIRCUIT BREAKERS IN THE OPEN/RESET POSITION
   - ALL MODE SWITCHES IN THE "OFF" POSITION
   - ALL EMERGENCY STOP SWITCHES IN THE "NORMAL" POSITION
   - ALL PRESSURE SWITCHES SHOWN WITHOUT PRESSURE PRESENT
   - ALL LEVEL SWITCHES SHOWN WITHOUT FLUID PRESENT
   - ALL TEMPERATURE SWITCHES SHOWN AT AMBIENT
2. INDICATES FIELD TERMINALS IN GENERATOR CONTROL SECTION.
3. INDICATES TERMINALS AT ENGINE/GENERATOR.
4. INDICATES INTERCONNECT TERMINALS IN MASTER SECTION.
5. INDICATES FIELD TERMINALS IN MASTER SECTION.
6. INDICATES INTERCONNECT TERMINALS IN GENERATOR CONTROL SECTION.
7. INDICATES INTERCONNECT TERMINALS IN VFD/DIST SECTION.
8. INDICATES FIELD TERMINALS IN VFD/DIST SECTION.
9. — — INDICATES FIELD WIRING BY OTHERS
   ALL CONTROL WIRING TO BE No. 14 AWG, 600 VOLT, TYPE SIS EXCEPT AS NOTED
10. SHIELDED WIRING TO BE No. 18 AWG, 300 VOLT, TWISTED LINE WITH 100% FOIL COVERAGE
11. ALL DIODES ARE 1N4007 EXCEPT AS NOTED

REV.	DATE	DESCRIPTION	BY
B	03-14-13	SHOP AS BUILT	GPN
A	04-10-12	REVISED PER ENGINEERING REVIEW	GPN

AEA PURCHASE ORDER No. REG-12-058 CONTROLLED POWER JOB No. 7455

TITLE: SCHEMATIC LEGEND & NOTES

SCALE: NONE	DATE: 03-12-12	DWN. BY: GPN
DWG. No: 7455-3101-D	SHEET: 1 OF 1	CKD. BY: JMD

JOB: AKIAK GENERATOR SWITCHGEAR

NOTICE
THE DRAWINGS, INFORMATION AND SUBJECT MATTER HEREOF ARE THE CONFIDENTIAL, SOLE AND EXCLUSIVE PROPERTY OF CONTROLLED POWER, INC., AND ARE NOT TO BE COPIED, REPRODUCED OR USED IN ANY MANNER FOR ANY PURPOSE WHATSOEVER WITHOUT WRITTEN CONSENT OR DIRECTION.

ALASKA ENERGY AUTHORITY
RURAL ENERGY GROUP
813 W. NORTHERN LIGHTS BLVD.
ANCHORAGE, ALASKA 99503
HTTP://WWW.AIDEA.ORG

Plot date: 2013/3/14 – 8:37

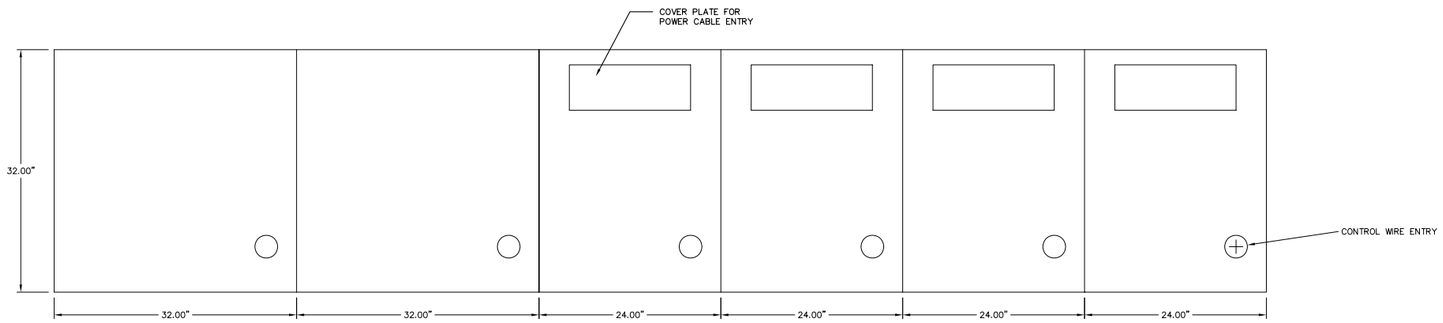

TOP VIEW

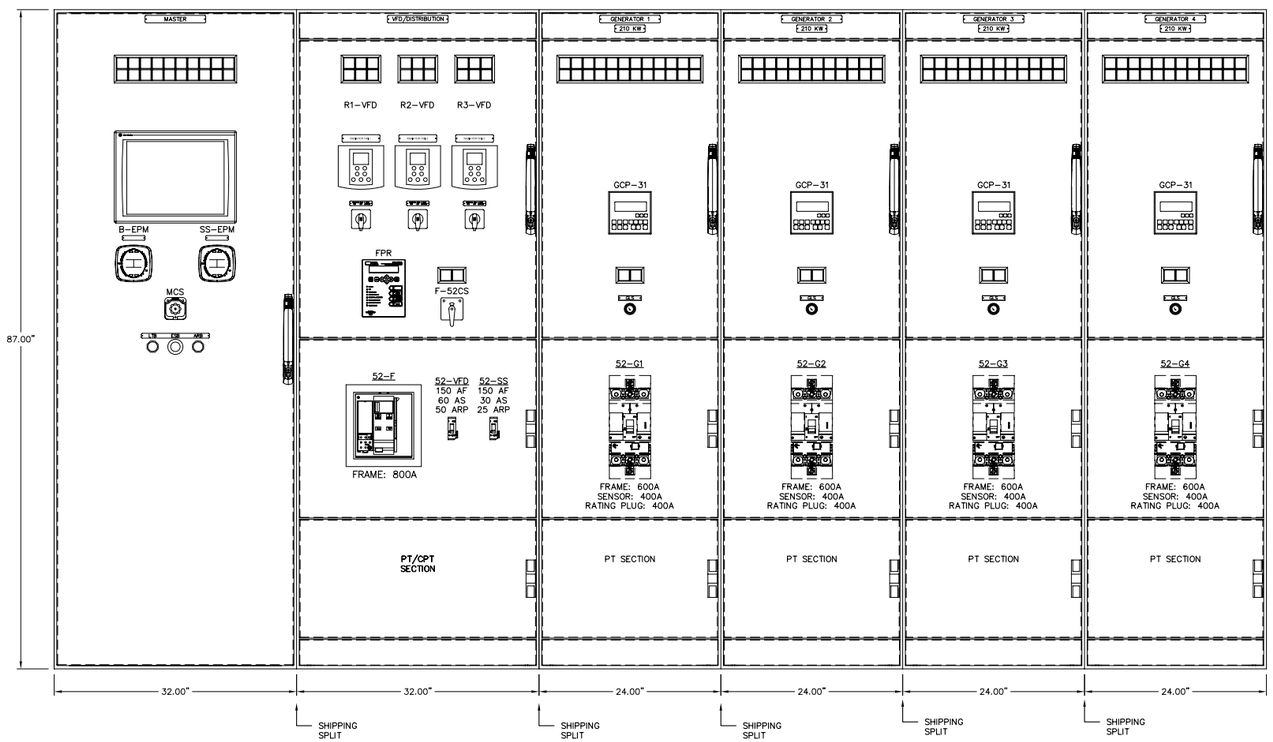

GENERATOR SWITCHGEAR ELEVATION VIEW

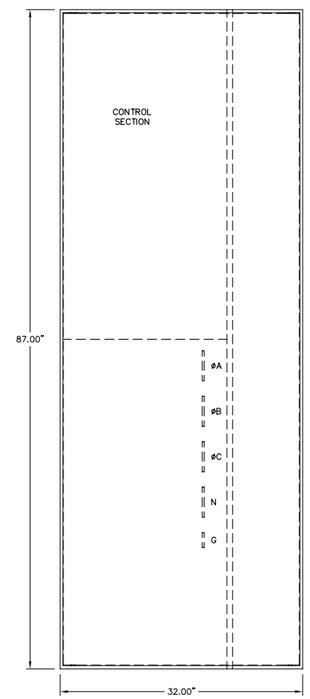

SIDE VIEW

REV.	DATE	DESCRIPTION	BY
B	03-14-13	SHOP AS BUILT	GPN
A	04-10-12	REVISED PER ENGINEERING REVIEW	GPN

AEA PURCHASE ORDER No. 03-12-12 CONTROLLED POWER JOB No. 7455

TITLE: GENERATOR SWITCHGEAR ELEVATION VIEW, OUTLINE DIAGRAM

SCALE: 1/10	DATE: 03-12-12	DWN. BY: GPN
DWG. No: 7455-4101-D	SHEET: 1 OF 1	CKD. BY: JMD

JOB: AKIAK SWITCHGEAR

NOTICE
THE DRAWINGS, INFORMATION AND SUBJECT MATTER HEREOF ARE THE CONFIDENTIAL, SOLE AND EXCLUSIVE PROPERTY OF CONTROLLED POWER, INC., AND ARE NOT TO BE COPIED, REPRODUCED OR USED IN ANY MANNER FOR ANY PURPOSE WHATSOEVER WITHOUT WRITTEN CONSENT OR DIRECTION.

ALASKA ENERGY AUTHORITY
RURAL ENERGY GROUP
813 W. NORTHERN LIGHTS BLVD.
ANCHORAGE, ALASKA 99503
HTTP://WWW.AIDEA.ORG

Plot date: 2013/3/14 - 8:37

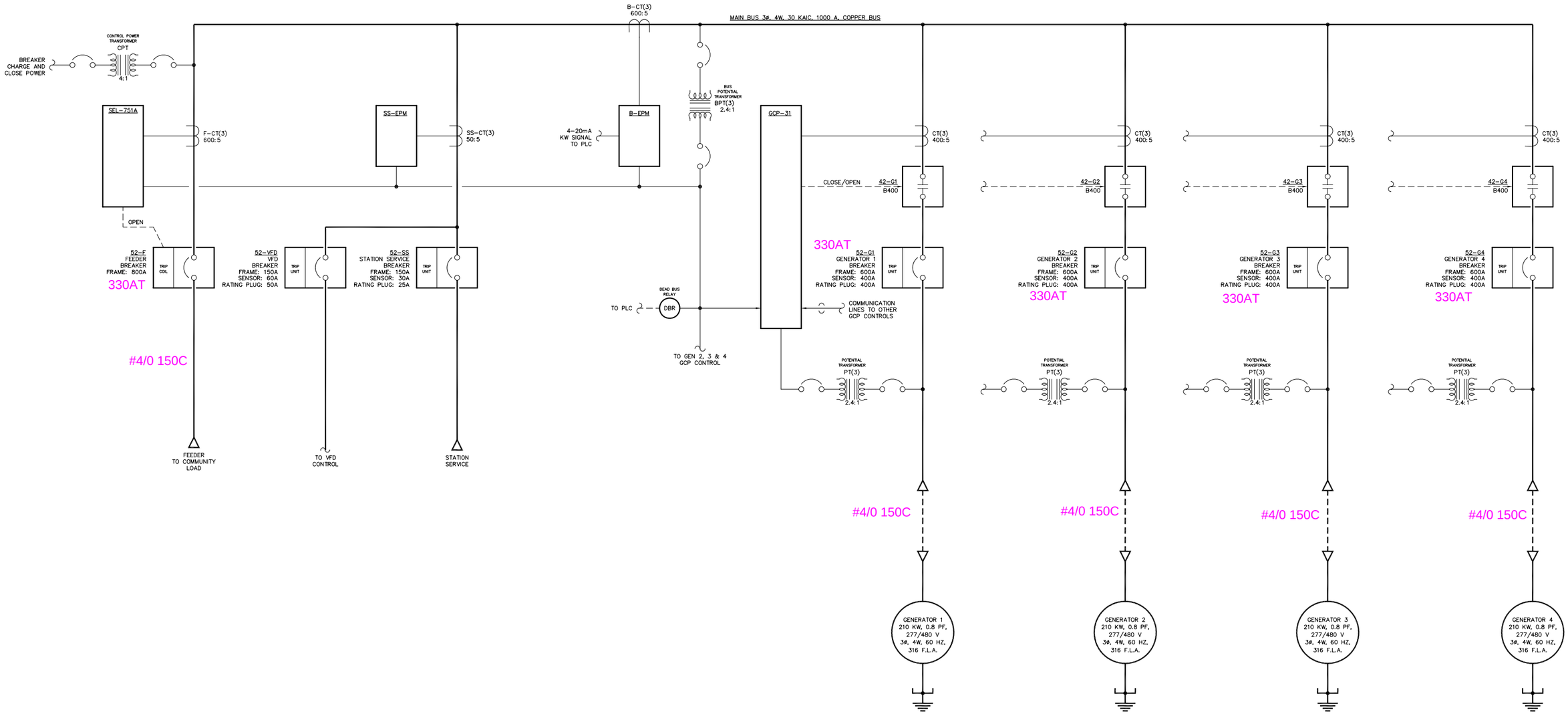

NOTES:

1. GENERATORS 2, 3 & 4 SIMILAR TO GENERATOR 1.

NOTE:

1. FOR GENERAL WIRING & CONSTRUCTION NOTES, SEE DRAWING No. 7455-3101-D.

Notes:
1) Conductor sizes and temperature ratings shown based on original design and have not been confirmed. Field verify.
2) Breaker trip setpoints shown based on original commissioning and may not match present operating conditions. Field verify.

REV.	DATE	DESCRIPTION	BY
B	03-14-13	SHOP AS BUILT	GPN
A	04-10-12	REVISED PER ENGINEERING REVIEW	GPN

AEA PURCHASE ORDER No. REG-12-058 CONTROLLED POWER JOB No. 7455

TITLE: GENERATOR SWITCHGEAR SINGLE LINE, SCHEMATIC DIAGRAM

SCALE: NONE | DATE: 03-12-12 | DWN. BY: GPN

DWG. No: 7455-5101-D | SHEET: 1 OF 1 | CKD. BY: JMD

JOB: AKIAK GENERATOR SWITCHGEAR

NOTICE
THE DRAWINGS, INFORMATION AND SUBJECT MATTER HEREOF ARE THE CONFIDENTIAL, SOLE AND EXCLUSIVE PROPERTY OF CONTROLLED POWER, INC., AND ARE NOT TO BE COPIED, REPRODUCED OR USED IN ANY MANNER FOR ANY PURPOSE WHATSOEVER WITHOUT WRITTEN CONSENT OR DIRECTION.

ALASKA ENERGY AUTHORITY
RURAL ENERGY GROUP
813 W. NORTHERN LIGHTS BLVD.
ANCHORAGE, ALASKA 99503
HTTP://WWW.AIDEA.ORG

Plot date: 2013/3/14 - 8:46

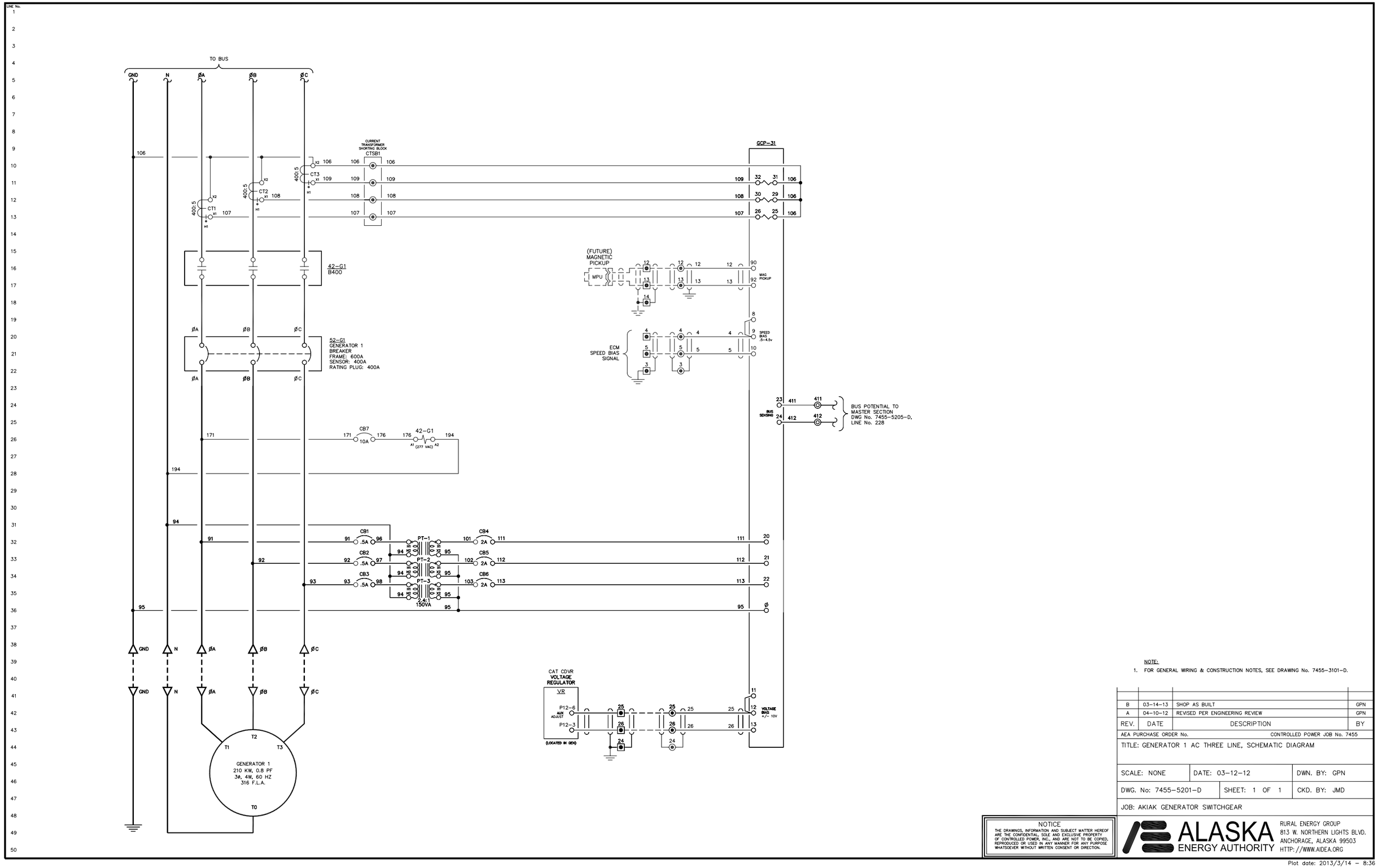

NOTE:

1. FOR GENERAL WIRING & CONSTRUCTION NOTES, SEE DRAWING No. 7455-3101-D.

REV.	DATE	DESCRIPTION	BY
B	03-14-13	SHOP AS BUILT	GPN
A	04-10-12	REVISED PER ENGINEERING REVIEW	GPN

AEA PURCHASE ORDER No. CONTROLLED POWER JOB No. 7455

TITLE: GENERATOR 1 AC THREE LINE, SCHEMATIC DIAGRAM

SCALE: NONE	DATE: 03-12-12	DWN. BY: GPN
DWG. No: 7455-5201-D	SHEET: 1 OF 1	CKD. BY: JMD

JOB: AKIAK GENERATOR SWITCHGEAR

NOTICE
THE DRAWINGS, INFORMATION AND SUBJECT MATTER HEREOF ARE THE CONFIDENTIAL, SOLE AND EXCLUSIVE PROPERTY OF CONTROLLED POWER, INC., AND ARE NOT TO BE COPIED, REPRODUCED OR USED IN ANY MANNER FOR ANY PURPOSE WHATSOEVER WITHOUT WRITTEN CONSENT OR DIRECTION.

ALASKA ENERGY AUTHORITY
RURAL ENERGY GROUP
813 W. NORTHERN LIGHTS BLVD.
ANCHORAGE, ALASKA 99503
HTTP://WWW.AIDEA.ORG

Plot date: 2013/3/14 - 8:36

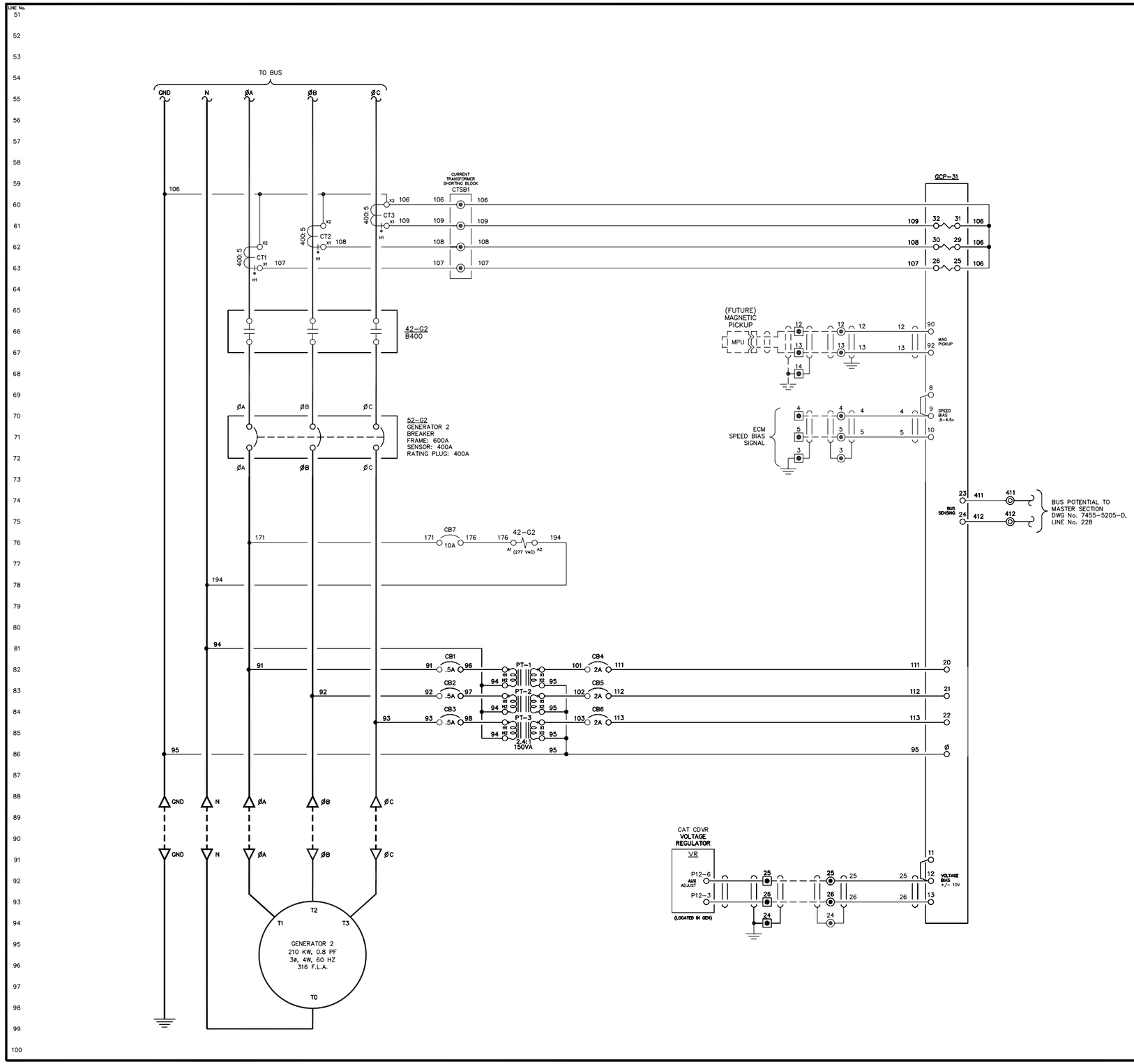

NOTE:

1. FOR GENERAL WIRING & CONSTRUCTION NOTES, SEE DRAWING No. 7455-3101-D.

REV.	DATE	DESCRIPTION	BY
B	03-14-13	SHOP AS BUILT	GPN
A	04-10-12	REVISED PER ENGINEERING REVIEW	GPN

AEA PURCHASE ORDER No. CONTROLLED POWER JOB No. 7455

TITLE: GENERATOR 2 AC THREE LINE, SCHEMATIC DIAGRAM

SCALE: NONE	DATE: 03-12-12	DWN. BY: GPN
DWG. No: 7455-5202-D	SHEET: 1 OF 1	CKD. BY: JMD

JOB: AKIAK GENERATOR SWITCHGEAR

NOTICE
THE DRAWINGS, INFORMATION AND SUBJECT MATTER HEREOF ARE THE CONFIDENTIAL, SOLE AND EXCLUSIVE PROPERTY OF CONTROLLED POWER, INC., AND ARE NOT TO BE COPIED, REPRODUCED OR USED IN ANY MANNER FOR ANY PURPOSE WHATSOEVER WITHOUT WRITTEN CONSENT OR DIRECTION.

ALASKA ENERGY AUTHORITY
RURAL ENERGY GROUP
813 W. NORTHERN LIGHTS BLVD.
ANCHORAGE, ALASKA 99503
HTTP://WWW.AIDEA.ORG

Plot date: 2013/3/14 - 8:36

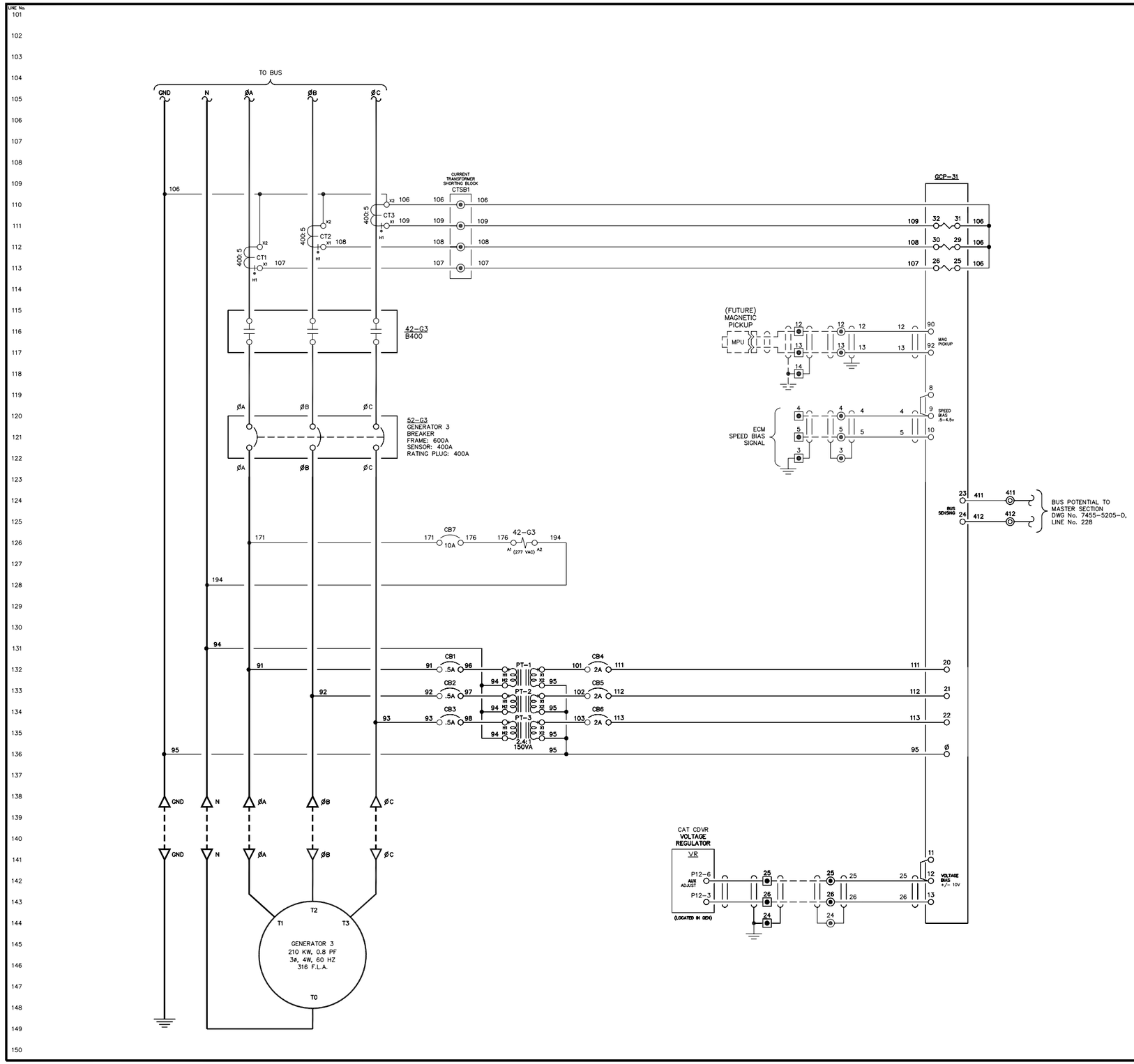

NOTE:

1. FOR GENERAL WIRING & CONSTRUCTION NOTES, SEE DRAWING No. 7455-3101-D.

REV.	DATE	DESCRIPTION	BY
B	03-14-13	SHOP AS BUILT	GPN
A	04-10-12	REVISED PER ENGINEERING REVIEW	GPN

AEA PURCHASE ORDER No. CONTROLLED POWER JOB No. 7455

TITLE: GENERATOR 3 AC THREE LINE, SCHEMATIC DIAGRAM

SCALE: NONE | DATE: 03-12-12 | DWN. BY: GPN

DWG. No: 7455-5203-D | SHEET: 1 OF 1 | CKD. BY: JMD

JOB: AKIAK GENERATOR SWITCHGEAR

NOTICE
THE DRAWINGS, INFORMATION AND SUBJECT MATTER HEREOF ARE THE CONFIDENTIAL, SOLE AND EXCLUSIVE PROPERTY OF CONTROLLED POWER, INC., AND ARE NOT TO BE COPIED, REPRODUCED OR USED IN ANY MANNER FOR ANY PURPOSE WHATSOEVER WITHOUT WRITTEN CONSENT OR DIRECTION.

ALASKA ENERGY AUTHORITY
RURAL ENERGY GROUP
813 W. NORTHERN LIGHTS BLVD.
ANCHORAGE, ALASKA 99503
HTTP://WWW.AIDEA.ORG

Plot date: 2013/3/14 - 8:36

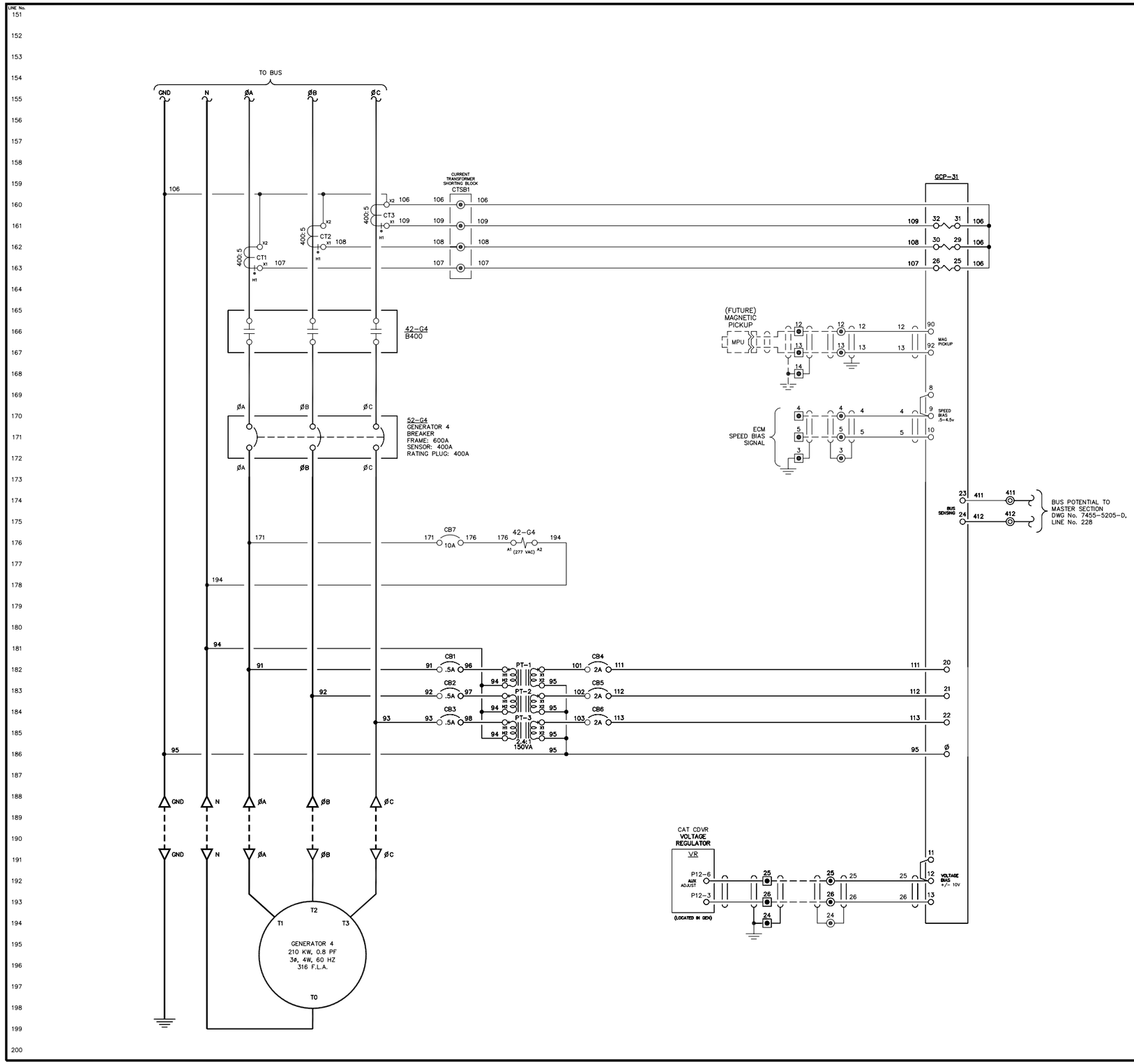

NOTE:

1. FOR GENERAL WIRING & CONSTRUCTION NOTES, SEE DRAWING No. 7455-3101-D.

REV.	DATE	DESCRIPTION	BY
B	03-14-13	SHOP AS BUILT	GPN
A	04-10-12	REVISED PER ENGINEERING REVIEW	GPN

AEA PURCHASE ORDER No. CONTROLLED POWER JOB No. 7455

TITLE: GENERATOR 4 AC THREE LINE, SCHEMATIC DIAGRAM

SCALE: NONE	DATE: 03-12-12	DWN. BY: GPN
DWG. No: 7455-5204-D	SHEET: 1 OF 1	CKD. BY: JMD

JOB: AKIAK GENERATOR SWITCHGEAR

NOTICE
THE DRAWINGS, INFORMATION AND SUBJECT MATTER HEREOF ARE THE CONFIDENTIAL, SOLE AND EXCLUSIVE PROPERTY OF CONTROLLED POWER, INC., AND ARE NOT TO BE COPIED, REPRODUCED OR USED IN ANY MANNER FOR ANY PURPOSE WHATSOEVER WITHOUT WRITTEN CONSENT OR DIRECTION.

ALASKA ENERGY AUTHORITY
RURAL ENERGY GROUP
813 W. NORTHERN LIGHTS BLVD.
ANCHORAGE, ALASKA 99503
HTTP://WWW.AIDEA.ORG

Plot date: 2013/3/14 - 8:35

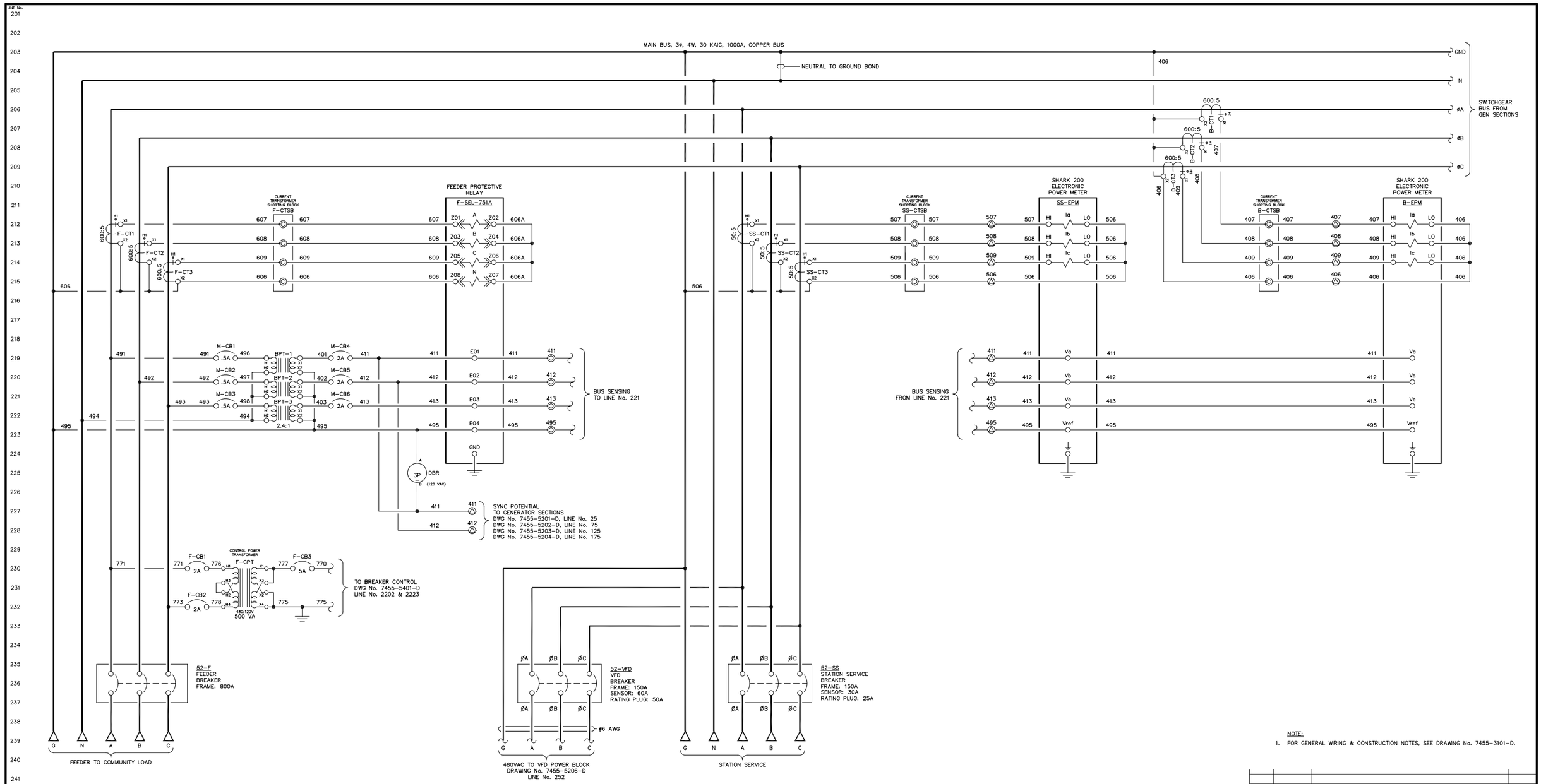

NOTE:

1. FOR GENERAL WIRING & CONSTRUCTION NOTES, SEE DRAWING No. 7455-3101-D.

REV.	DATE	DESCRIPTION	BY
B	03-14-13	SHOP AS BUILT	GPN
A	04-10-12	REVISED PER ENGINEERING REVIEW	GPN

AEA PURCHASE ORDER No. REG-12-058 — CONTROLLED POWER JOB No. 7455

TITLE: MASTER AC THREE LINE, SCHEMATIC DIAGRAM

SCALE: NONE	DATE: 03-12-12	DWN. BY: GPN
DWG. No: 7455-5205-D	SHEET: 1 OF 1	CKD. BY: JMD

JOB: AKIAK GENERATOR SWITCHGEAR

NOTICE
THE DRAWINGS, INFORMATION AND SUBJECT MATTER HEREOF ARE THE CONFIDENTIAL, SOLE AND EXCLUSIVE PROPERTY OF CONTROLLED POWER, INC., AND ARE NOT TO BE COPIED, REPRODUCED OR USED IN ANY MANNER FOR ANY PURPOSE WHATSOEVER WITHOUT WRITTEN CONSENT OR DIRECTION.

ALASKA ENERGY AUTHORITY
RURAL ENERGY GROUP
813 W. NORTHERN LIGHTS BLVD.
ANCHORAGE, ALASKA 99503
HTTP://WWW.AIDEA.ORG

Plot date: 2013/3/14 – 8:35

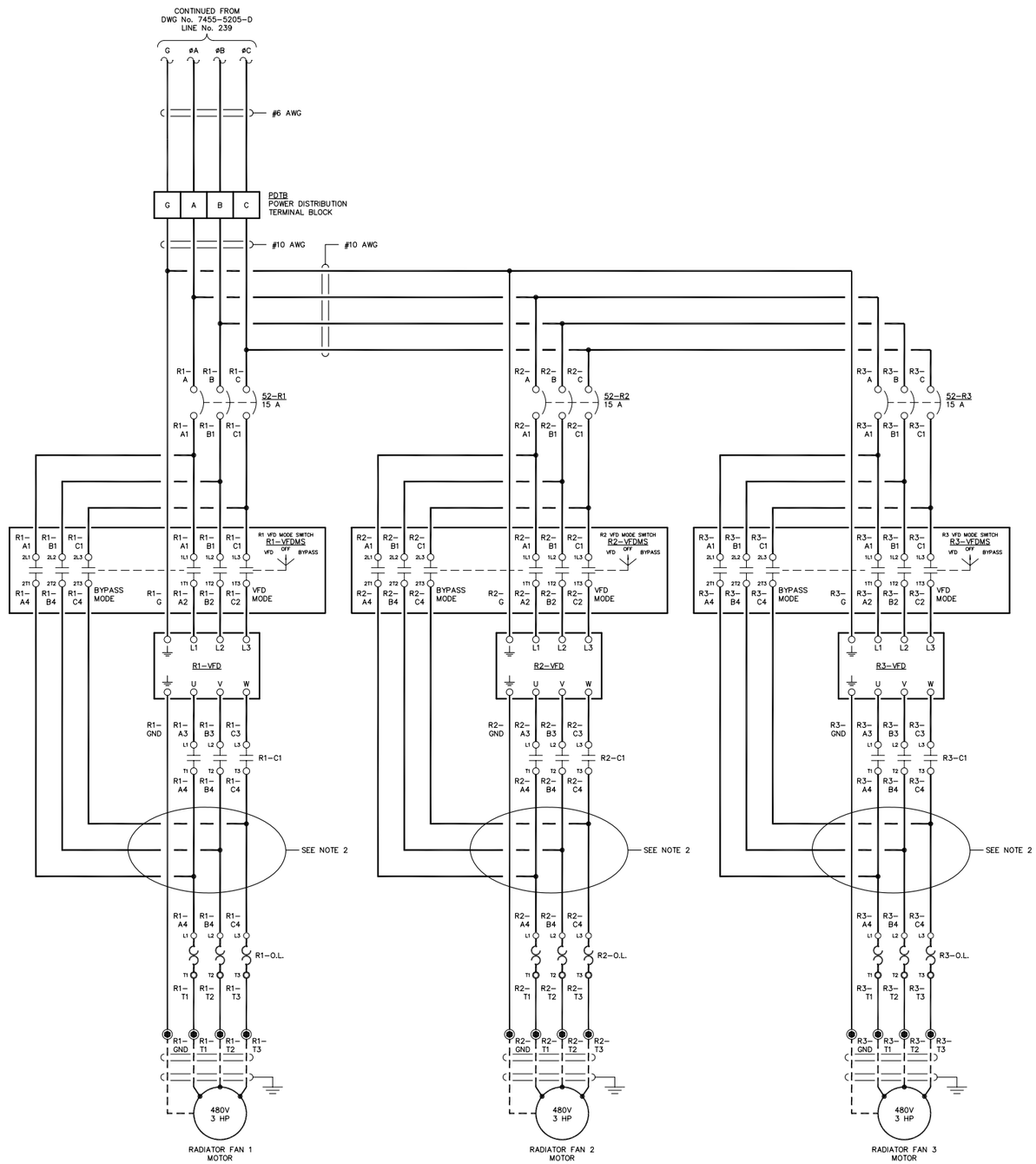

NOTE:

1. FOR GENERAL WIRING & CONSTRUCTION NOTES, SEE DRAWING No. 7455-3101-D.
2. VFD LOAD WIRES SHALL BE ROUTED SEPARATE FROM ALL OTHER WIRING OR SHIELDED TO AVOID RF INTERFERENCE.

REV.	DATE	DESCRIPTION	BY
B	03-14-13	SHOP AS BUILT	GPN
A	04-10-12	REVISED PER ENGINEERING REVIEW	GPN

AEA PURCHASE ORDER No. REG-12-058 CONTROLLED POWER JOB No. 7455

TITLE: VFD THREE LINE, SCHEMATIC DIAGRAM

SCALE: NONE | DATE: 03-12-12 | DWN. BY: GPN

DWG. No: 7455-5206-D | SHEET: 1 OF 1 | CKD. BY: JMD

JOB: AKIAK GENERATOR SWITCHGEAR

NOTICE
THE DRAWINGS, INFORMATION AND SUBJECT MATTER HEREOF ARE THE CONFIDENTIAL, SOLE AND EXCLUSIVE PROPERTY OF CONTROLLED POWER, INC., AND ARE NOT TO BE COPIED, REPRODUCED OR USED IN ANY MANNER FOR ANY PURPOSE WHATSOEVER WITHOUT WRITTEN CONSENT OR DIRECTION.

ALASKA ENERGY AUTHORITY
RURAL ENERGY GROUP
813 W. NORTHERN LIGHTS BLVD.
ANCHORAGE, ALASKA 99503
HTTP://WWW.AIDEA.ORG

Plot date: 2013/3/14 - 8:35

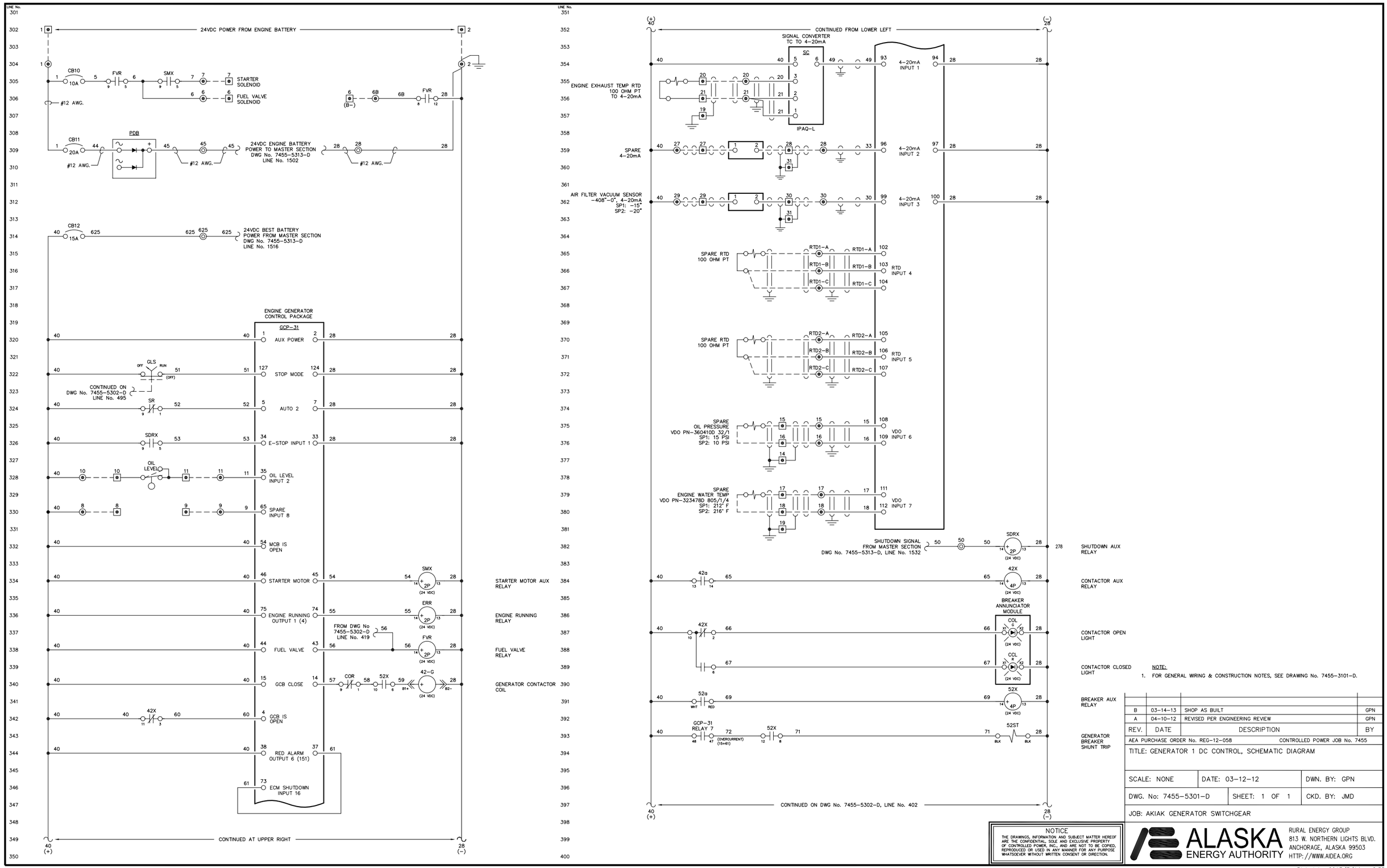

NOTE:

1. FOR GENERAL WIRING & CONSTRUCTION NOTES, SEE DRAWING No. 7455-3101-D.

REV.	DATE	DESCRIPTION	BY
B	03-14-13	SHOP AS BUILT	GPN
A	04-10-12	REVISED PER ENGINEERING REVIEW	GPN

AEA PURCHASE ORDER No. REG-12-058 — CONTROLLED POWER JOB No. 7455

TITLE: GENERATOR 1 DC CONTROL, SCHEMATIC DIAGRAM

SCALE: NONE | DATE: 03-12-12 | DWN. BY: GPN

DWG. No: 7455-5301-D | SHEET: 1 OF 1 | CKD. BY: JMD

JOB: AKIAK GENERATOR SWITCHGEAR

NOTICE
THE DRAWINGS, INFORMATION AND SUBJECT MATTER HEREOF ARE THE CONFIDENTIAL, SOLE AND EXCLUSIVE PROPERTY OF CONTROLLED POWER, INC., AND ARE NOT TO BE COPIED, REPRODUCED OR USED IN ANY MANNER FOR ANY PURPOSE WHATSOEVER WITHOUT WRITTEN CONSENT OR DIRECTION.

ALASKA ENERGY AUTHORITY
RURAL ENERGY GROUP
813 W. NORTHERN LIGHTS BLVD.
ANCHORAGE, ALASKA 99503
HTTP://WWW.AIDEA.ORG

Plot date: 2013/3/14 – 8:35

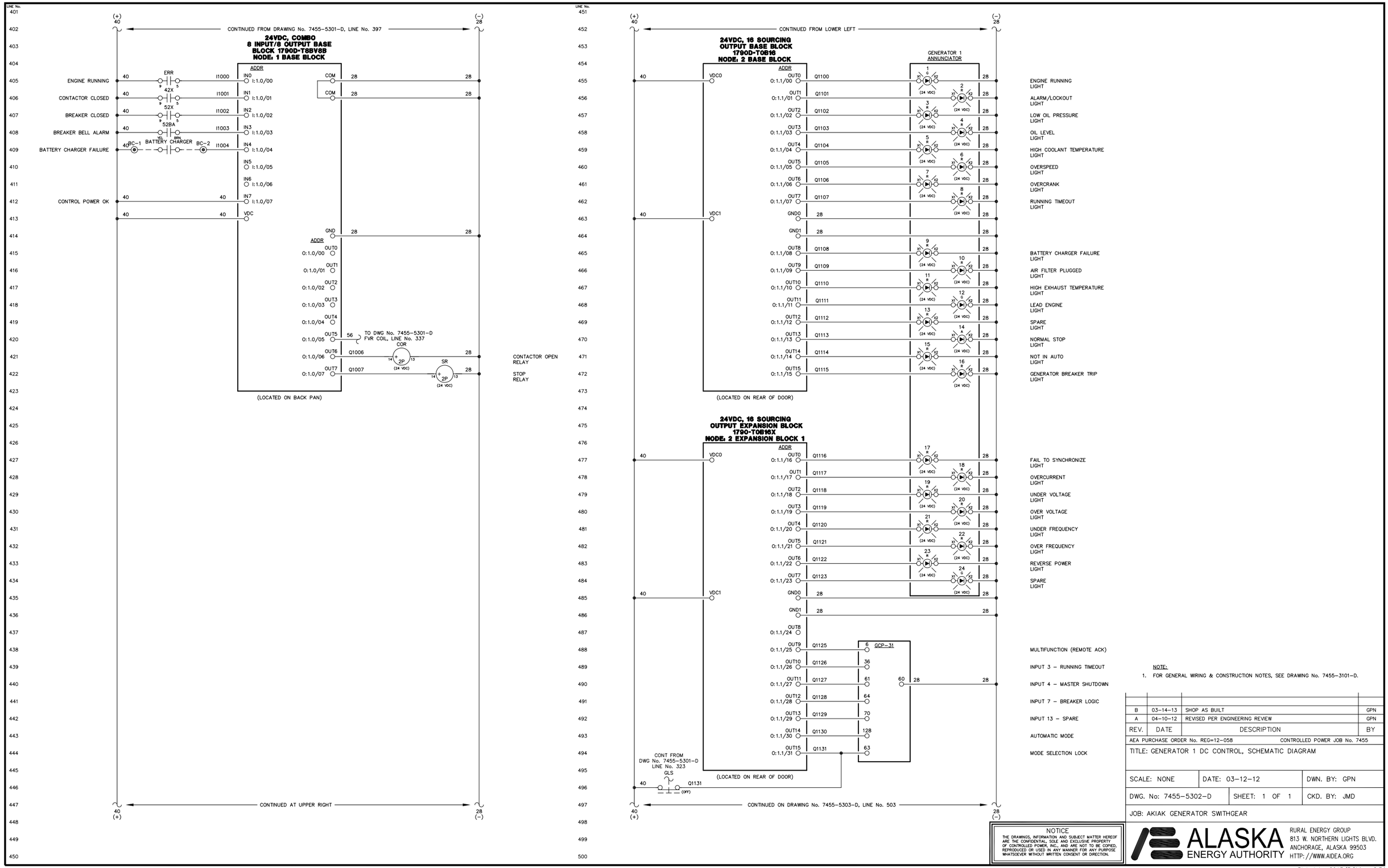

NOTE:
1. FOR GENERAL WIRING & CONSTRUCTION NOTES, SEE DRAWING No. 7455-3101-D.

REV.	DATE	DESCRIPTION	BY
B	03-14-13	SHOP AS BUILT	GPN
A	04-10-12	REVISED PER ENGINEERING REVIEW	GPN

AEA PURCHASE ORDER No. REG=12-058 CONTROLLED POWER JOB No. 7455

TITLE: GENERATOR 1 DC CONTROL, SCHEMATIC DIAGRAM

SCALE: NONE | DATE: 03-12-12 | DWN. BY: GPN

DWG. No: 7455-5302-D | SHEET: 1 OF 1 | CKD. BY: JMD

JOB: AKIAK GENERATOR SWITHGEAR

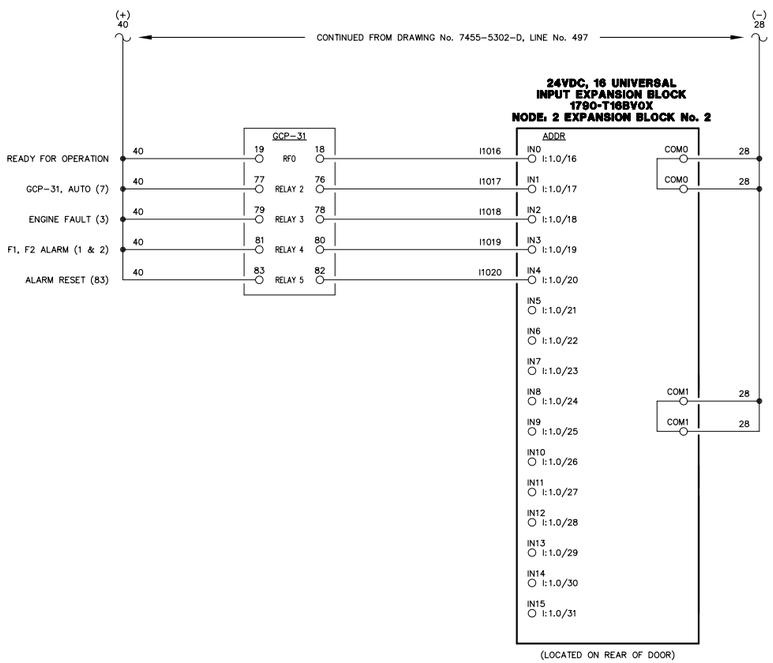

NOTE:

1. FOR GENERAL WIRING & CONSTRUCTION NOTES, SEE DRAWING No. 7455-3101-D.

REV.	DATE	DESCRIPTION	BY
B	03-14-13	SHOP AS BUILT	GPN
A	04-10-12	REVISED PER ENGINEERING REVIEW	GPN

AEA PURCHASE ORDER No. REG-12-058 CONTROLLED POWER JOB No. 7455

TITLE: GENERATOR 1 DC CONTROL, SCHEMATIC DIAGRAM

SCALE: NONE	DATE: 03-12-12	DWN. BY: GPN
DWG. No: 7455-5303-D	SHEET: 1 OF 1	CKD. BY: JMD

JOB: AKIAK GENERATOR SWITCHGEAR

NOTICE
THE DRAWINGS, INFORMATION AND SUBJECT MATTER HEREOF ARE THE CONFIDENTIAL, SOLE AND EXCLUSIVE PROPERTY OF CONTROLLED POWER, INC., AND ARE NOT TO BE COPIED, REPRODUCED OR USED IN ANY MANNER FOR ANY PURPOSE WHATSOEVER WITHOUT WRITTEN CONSENT OR DIRECTION.

ALASKA ENERGY AUTHORITY
RURAL ENERGY GROUP
813 W. NORTHERN LIGHTS BLVD.
ANCHORAGE, ALASKA 99503
HTTP://WWW.AIDEA.ORG

Plot date: 2013/3/14 – 8:34

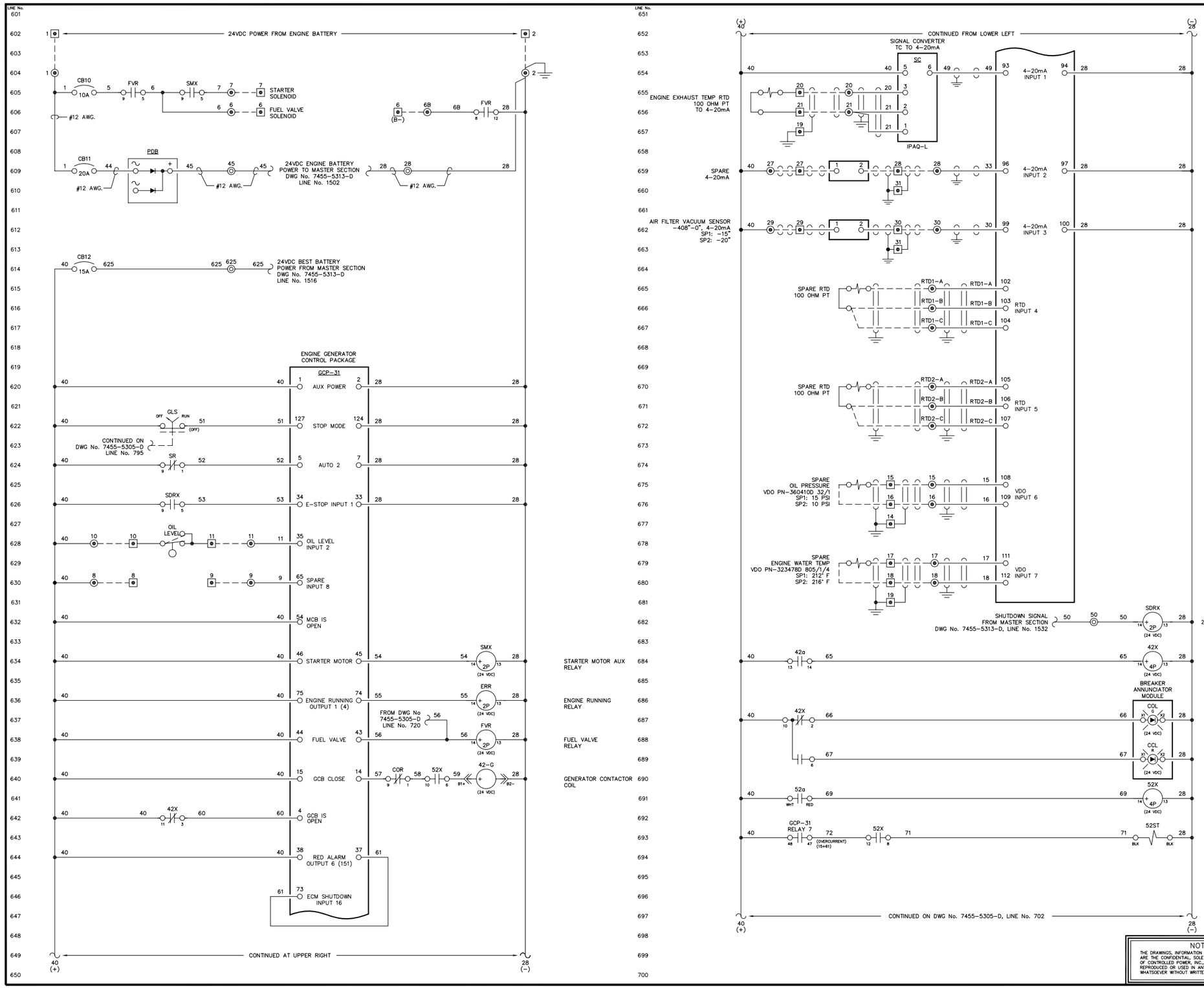

NOTE:

1. FOR GENERAL WIRING & CONSTRUCTION NOTES, SEE DRAWING No. 7455-3101-D.

REV.	DATE	DESCRIPTION	BY
B	03-14-13	SHOP AS BUILT	GPN
A	04-10-12	REVISED PER ENGINEERING REVIEW	GPN

AEA PURCHASE ORDER No. REG-12-058 — CONTROLLED POWER JOB No. 7455

TITLE: GENERATOR 2 DC CONTROL, SCHEMATIC DIAGRAM

SCALE: NONE | DATE: 03-12-12 | DWN. BY: GPN

DWG. No: 7455-5304-D | SHEET: 1 OF 1 | CKD. BY: JMD

JOB: AKIAK GENERATOR SWITCHGEAR

NOTICE
THE DRAWINGS, INFORMATION AND SUBJECT MATTER HEREOF ARE THE CONFIDENTIAL, SOLE AND EXCLUSIVE PROPERTY OF CONTROLLED POWER, INC., AND ARE NOT TO BE COPIED, REPRODUCED OR USED IN ANY MANNER FOR ANY PURPOSE WHATSOEVER WITHOUT WRITTEN CONSENT OR DIRECTION.

ALASKA ENERGY AUTHORITY
RURAL ENERGY GROUP
813 W. NORTHERN LIGHTS BLVD.
ANCHORAGE, ALASKA 99503
HTTP://WWW.AIDEA.ORG

Plot date: 2013/3/14 – 8:34

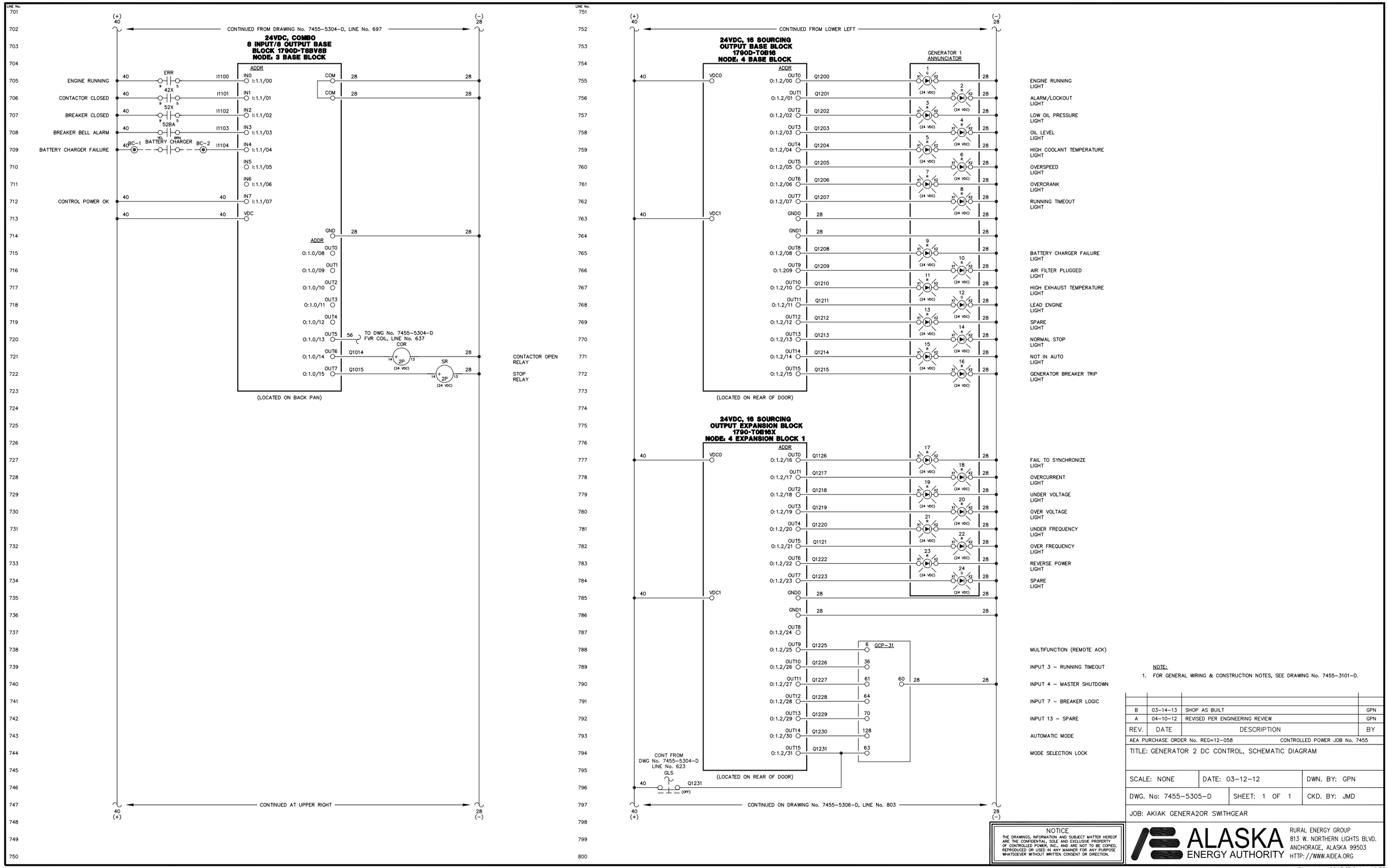

NOTE:
1. FOR GENERAL WIRING & CONSTRUCTION NOTES, SEE DRAWING No. 7455-3101-D.

REV.	DATE	DESCRIPTION	BY
B	03-14-13	SHOP AS BUILT	GPN
A	04-10-12	REVISED PER ENGINEERING REVIEW	GPN

AEA PURCHASE ORDER No. REG=12-058 CONTROLLED POWER JOB No. 7455

TITLE: GENERATOR 2 DC CONTROL, SCHEMATIC DIAGRAM

SCALE: NONE | DATE: 03-12-12 | DWN. BY: GPN

DWG. No: 7455-5305-D | SHEET: 1 OF 1 | CKD. BY: JMD

JOB: AKIAK GENERA2OR SWITHGEAR

NOTICE
THE DRAWINGS, INFORMATION AND SUBJECT MATTER HEREOF ARE THE CONFIDENTIAL, SOLE AND EXCLUSIVE PROPERTY OF CONTROLLED POWER, INC., AND ARE NOT TO BE COPIED, REPRODUCED OR USED IN ANY MANNER FOR ANY PURPOSE WHATSOEVER WITHOUT WRITTEN CONSENT OR DIRECTION.

ALASKA ENERGY AUTHORITY
RURAL ENERGY GROUP
813 W. NORTHERN LIGHTS BLVD.
ANCHORAGE, ALASKA 99503
HTTP://WWW.AIDEA.ORG

Plot date: 2013/3/14 - 8:33

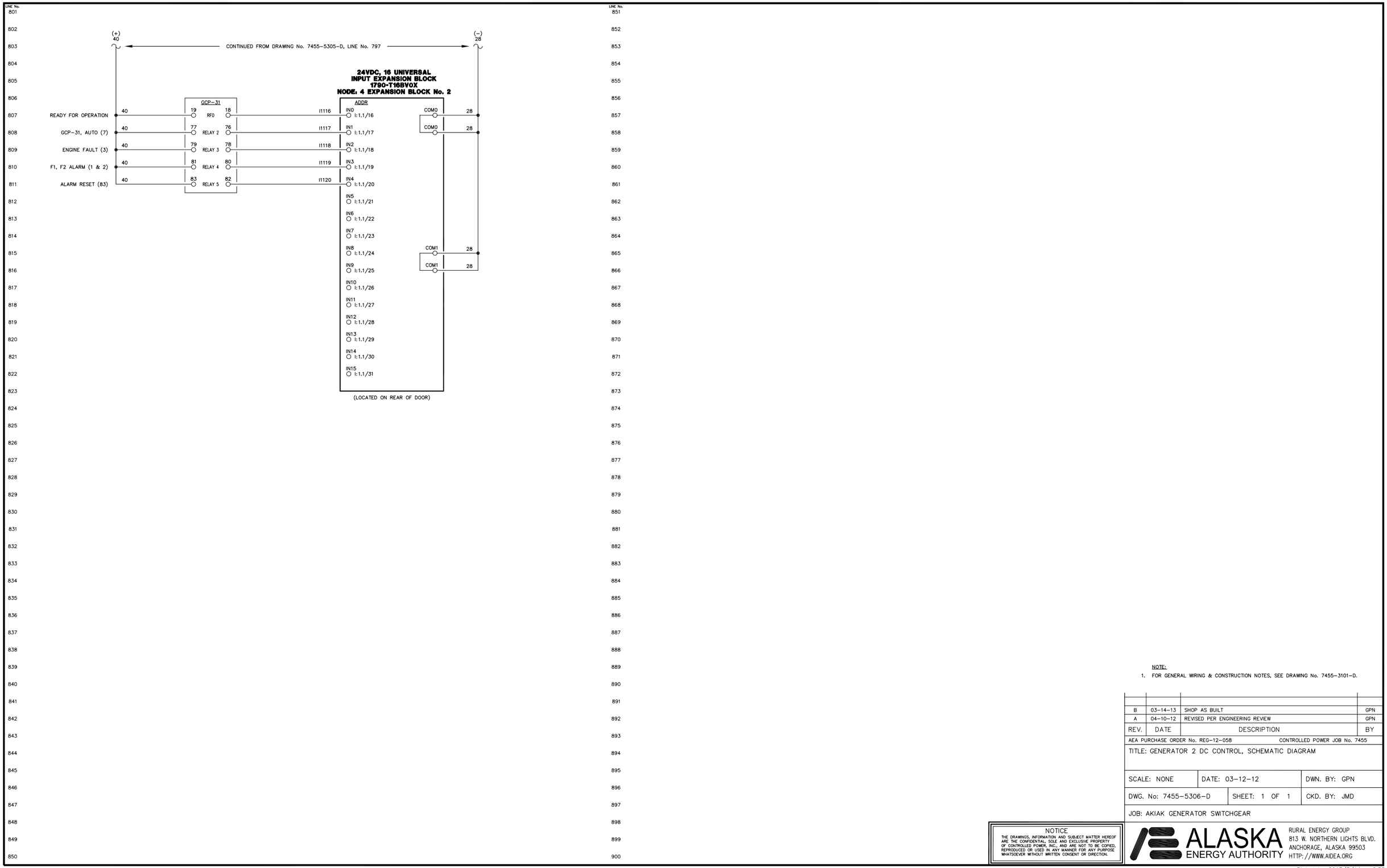

NOTE:

1. FOR GENERAL WIRING & CONSTRUCTION NOTES, SEE DRAWING No. 7455-3101-D.

REV.	DATE	DESCRIPTION	BY
B	03-14-13	SHOP AS BUILT	GPN
A	04-10-12	REVISED PER ENGINEERING REVIEW	GPN

AEA PURCHASE ORDER No. REG-12-058 CONTROLLED POWER JOB No. 7455

TITLE: GENERATOR 2 DC CONTROL, SCHEMATIC DIAGRAM

SCALE: NONE	DATE: 03-12-12	DWN. BY: GPN
DWG. No: 7455-5306-D	SHEET: 1 OF 1	CKD. BY: JMD

JOB: AKIAK GENERATOR SWITCHGEAR

NOTICE
THE DRAWINGS, INFORMATION AND SUBJECT MATTER HEREOF ARE THE CONFIDENTIAL, SOLE AND EXCLUSIVE PROPERTY OF CONTROLLED POWER, INC., AND ARE NOT TO BE COPIED, REPRODUCED OR USED IN ANY MANNER FOR ANY PURPOSE WHATSOEVER WITHOUT WRITTEN CONSENT OR DIRECTION.

ALASKA ENERGY AUTHORITY
RURAL ENERGY GROUP
813 W. NORTHERN LIGHTS BLVD.
ANCHORAGE, ALASKA 99503
HTTP://WWW.AIDEA.ORG

Plot date: 2013/3/14 – 8:33

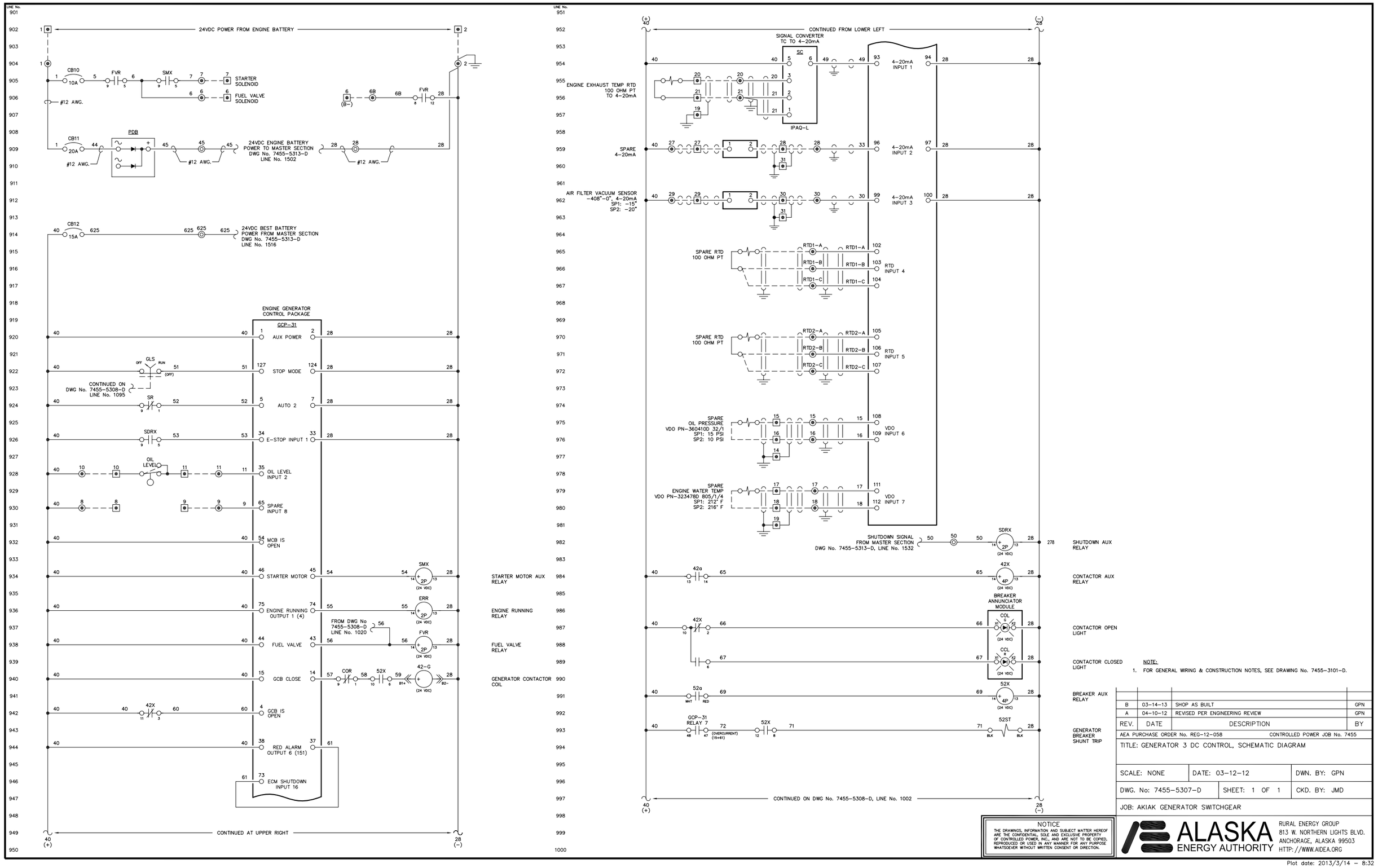

NOTE:

1. FOR GENERAL WIRING & CONSTRUCTION NOTES, SEE DRAWING No. 7455-3101-D.

REV.	DATE	DESCRIPTION	BY
B	03-14-13	SHOP AS BUILT	GPN
A	04-10-12	REVISED PER ENGINEERING REVIEW	GPN

AEA PURCHASE ORDER No. REG-12-058 — CONTROLLED POWER JOB No. 7455

TITLE: GENERATOR 3 DC CONTROL, SCHEMATIC DIAGRAM

SCALE: NONE | DATE: 03-12-12 | DWN. BY: GPN

DWG. No: 7455-5307-D | SHEET: 1 OF 1 | CKD. BY: JMD

JOB: AKIAK GENERATOR SWITCHGEAR

NOTICE
THE DRAWINGS, INFORMATION AND SUBJECT MATTER HEREOF ARE THE CONFIDENTIAL, SOLE AND EXCLUSIVE PROPERTY OF CONTROLLED POWER, INC., AND ARE NOT TO BE COPIED, REPRODUCED OR USED IN ANY MANNER FOR ANY PURPOSE WHATSOEVER WITHOUT WRITTEN CONSENT OR DIRECTION.

ALASKA ENERGY AUTHORITY
RURAL ENERGY GROUP
813 W. NORTHERN LIGHTS BLVD.
ANCHORAGE, ALASKA 99503
HTTP://WWW.AIDEA.ORG

Plot date: 2013/3/14 – 8:32

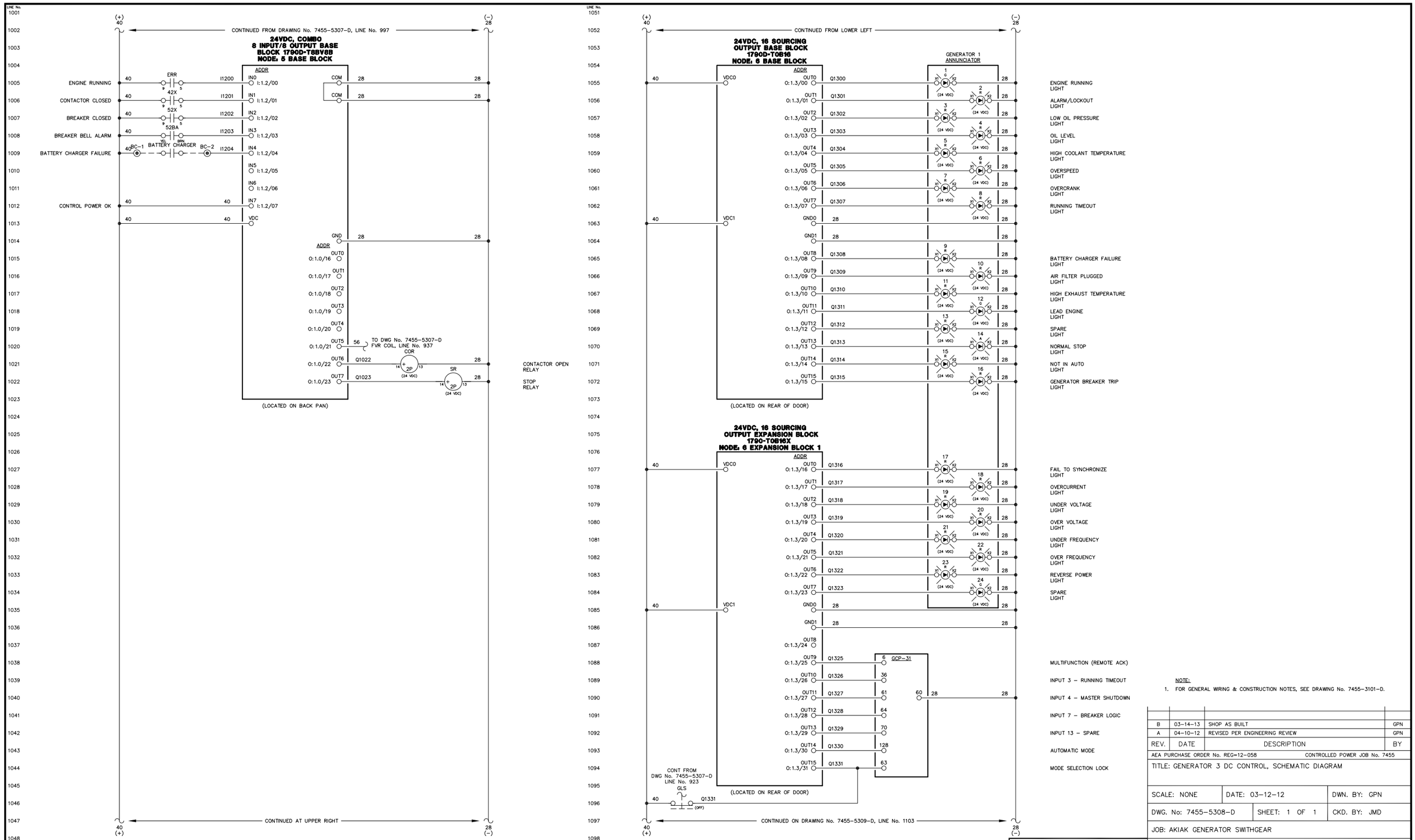

NOTE:
1. FOR GENERAL WIRING & CONSTRUCTION NOTES, SEE DRAWING No. 7455-3101-D.

REV.	DATE	DESCRIPTION	BY
B	03-14-13	SHOP AS BUILT	GPN
A	04-10-12	REVISED PER ENGINEERING REVIEW	GPN

AEA PURCHASE ORDER No. REG=12-058 CONTROLLED POWER JOB No. 7455

TITLE: GENERATOR 3 DC CONTROL, SCHEMATIC DIAGRAM

SCALE: NONE | DATE: 03-12-12 | DWN. BY: GPN

DWG. No: 7455-5308-D | SHEET: 1 OF 1 | CKD. BY: JMD

JOB: AKIAK GENERATOR SWITHGEAR

NOTICE
THE DRAWINGS, INFORMATION AND SUBJECT MATTER HEREOF ARE THE CONFIDENTIAL, SOLE AND EXCLUSIVE PROPERTY OF CONTROLLED POWER, INC., AND ARE NOT TO BE COPIED, REPRODUCED OR USED IN ANY MANNER FOR ANY PURPOSE WHATSOEVER WITHOUT WRITTEN CONSENT OR DIRECTION.

ALASKA ENERGY AUTHORITY
RURAL ENERGY GROUP
813 W. NORTHERN LIGHTS BLVD.
ANCHORAGE, ALASKA 99503
HTTP://WWW.AIDEA.ORG

Plot date: 2013/3/14 – 8:32

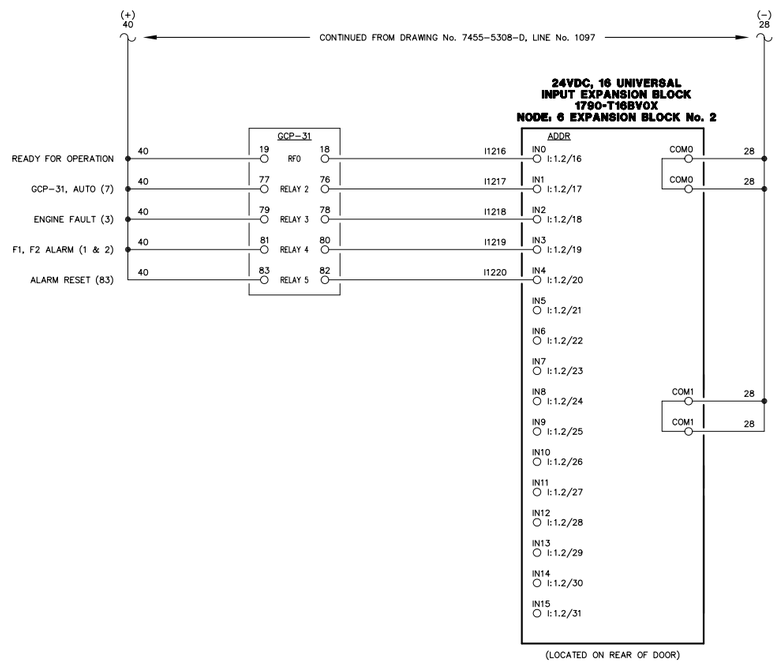

NOTE:

1. FOR GENERAL WIRING & CONSTRUCTION NOTES, SEE DRAWING No. 7455-3101-D.

REV.	DATE	DESCRIPTION	BY
B	03-14-13	SHOP AS BUILT	GPN
A	04-10-12	REVISED PER ENGINEERING REVIEW	GPN

AEA PURCHASE ORDER No. REG-12-058 CONTROLLED POWER JOB No. 7455

TITLE: GENERATOR 3 DC CONTROL, SCHEMATIC DIAGRAM

SCALE: NONE	DATE: 03-12-12	DWN. BY: GPN
DWG. No: 7455-5309-D	SHEET: 1 OF 1	CKD. BY: JMD

JOB: AKIAK GENERATOR SWITCHGEAR

NOTICE
THE DRAWINGS, INFORMATION AND SUBJECT MATTER HEREOF ARE THE CONFIDENTIAL, SOLE AND EXCLUSIVE PROPERTY OF CONTROLLED POWER, INC., AND ARE NOT TO BE COPIED, REPRODUCED OR USED IN ANY MANNER FOR ANY PURPOSE WHATSOEVER WITHOUT WRITTEN CONSENT OR DIRECTION.

ALASKA ENERGY AUTHORITY
RURAL ENERGY GROUP
813 W. NORTHERN LIGHTS BLVD.
ANCHORAGE, ALASKA 99503
HTTP://WWW.AIDEA.ORG

Plot date: 2013/3/14 – 8:32

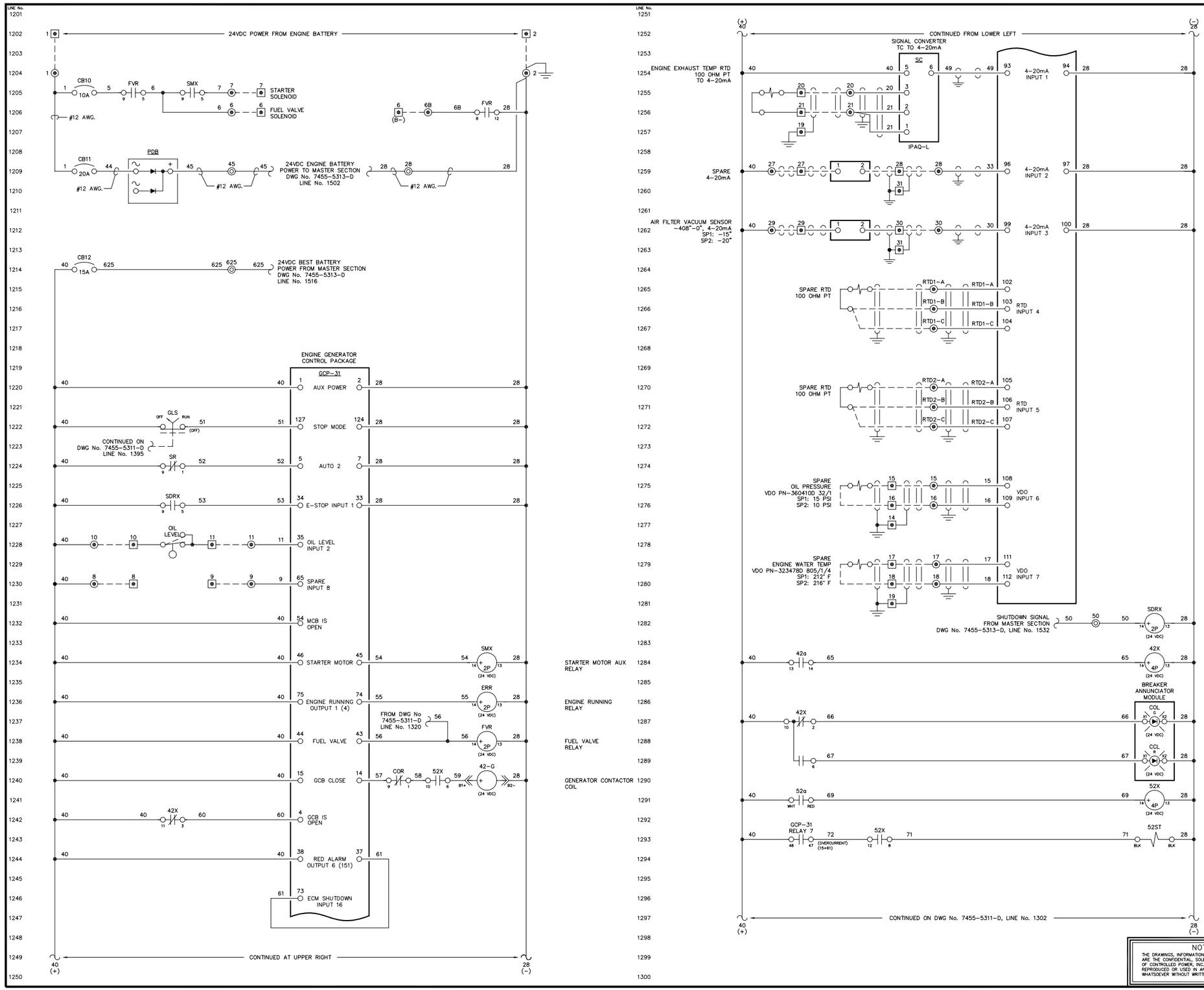

NOTE:

1. FOR GENERAL WIRING & CONSTRUCTION NOTES, SEE DRAWING No. 7455-3101-D.

REV.	DATE	DESCRIPTION	BY
B	03-14-13	SHOP AS BUILT	GPN
A	04-10-12	REVISED PER ENGINEERING REVIEW	GPN

AEA PURCHASE ORDER No. REG-12-058 — CONTROLLED POWER JOB No. 7455

TITLE: GENERATOR 4 DC CONTROL, SCHEMATIC DIAGRAM

SCALE: NONE | DATE: 03-12-12 | DWN. BY: GPN

DWG. No: 7455-5310-D | SHEET: 1 OF 1 | CKD. BY: JMD

JOB: AKIAK GENERATOR SWITCHGEAR

NOTICE
THE DRAWINGS, INFORMATION AND SUBJECT MATTER HEREOF ARE THE CONFIDENTIAL, SOLE AND EXCLUSIVE PROPERTY OF CONTROLLED POWER, INC., AND ARE NOT TO BE COPIED, REPRODUCED OR USED IN ANY MANNER FOR ANY PURPOSE WHATSOEVER WITHOUT WRITTEN CONSENT OR DIRECTION.

ALASKA ENERGY AUTHORITY
RURAL ENERGY GROUP
813 W. NORTHERN LIGHTS BLVD.
ANCHORAGE, ALASKA 99503
HTTP://WWW.AIDEA.ORG

Plot date: 2013/3/14 – 8:32

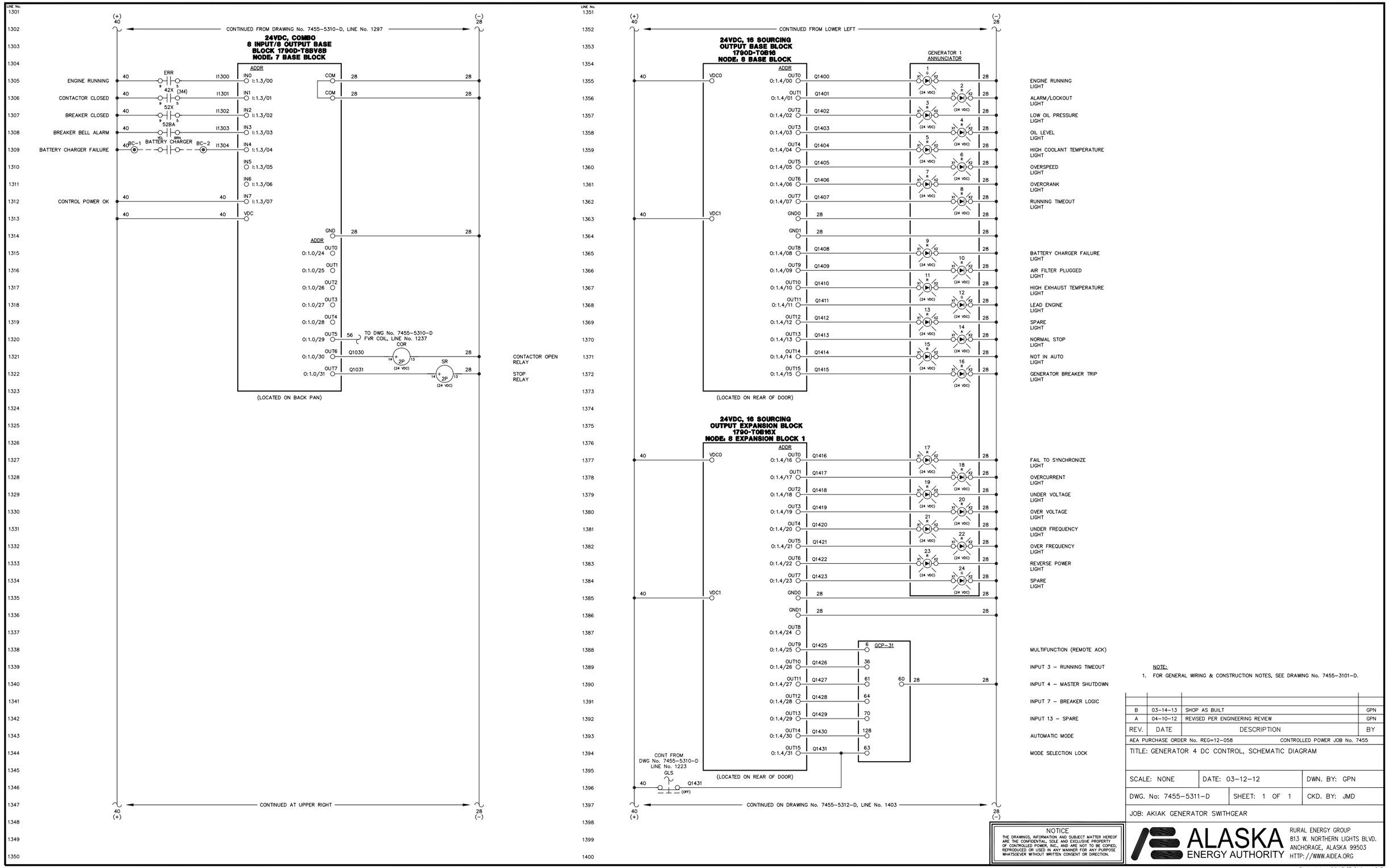

NOTE:
1. FOR GENERAL WIRING & CONSTRUCTION NOTES, SEE DRAWING No. 7455-3101-D.

REV.	DATE	DESCRIPTION	BY
B	03-14-13	SHOP AS BUILT	GPN
A	04-10-12	REVISED PER ENGINEERING REVIEW	GPN

AEA PURCHASE ORDER No. REG=12-058 CONTROLLED POWER JOB No. 7455

TITLE: GENERATOR 4 DC CONTROL, SCHEMATIC DIAGRAM

SCALE: NONE | DATE: 03-12-12 | DWN. BY: GPN

DWG. No: 7455-5311-D | SHEET: 1 OF 1 | CKD. BY: JMD

JOB: AKIAK GENERATOR SWITHGEAR

NOTICE
THE DRAWINGS, INFORMATION AND SUBJECT MATTER HEREOF ARE THE CONFIDENTIAL, SOLE AND EXCLUSIVE PROPERTY OF CONTROLLED POWER, INC., AND ARE NOT TO BE COPIED, REPRODUCED OR USED IN ANY MANNER FOR ANY PURPOSE WHATSOEVER WITHOUT WRITTEN CONSENT OR DIRECTION.

ALASKA ENERGY AUTHORITY
RURAL ENERGY GROUP
813 W. NORTHERN LIGHTS BLVD.
ANCHORAGE, ALASKA 99503
HTTP://WWW.AIDEA.ORG

Plot date: 2013/3/14 – 8:31

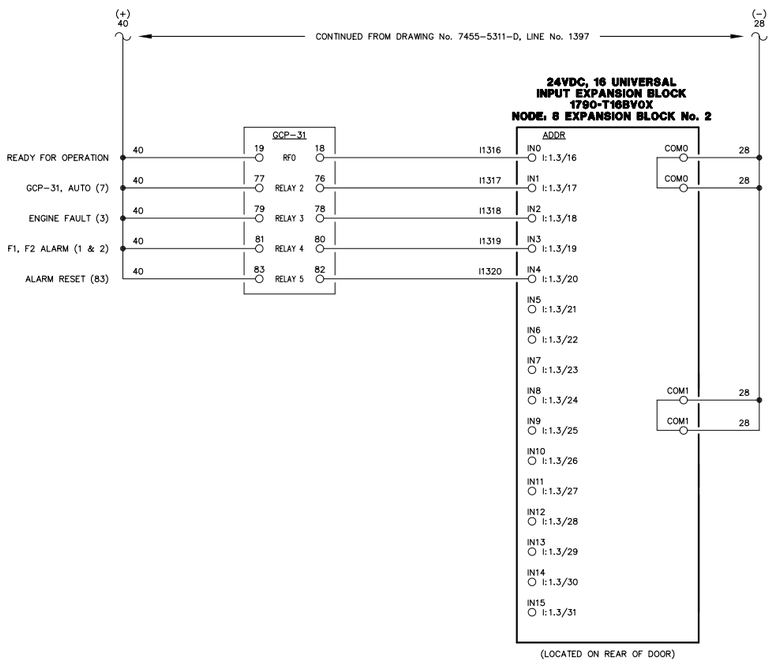

NOTE:

1. FOR GENERAL WIRING & CONSTRUCTION NOTES, SEE DRAWING No. 7455-3101-D.

REV.	DATE	DESCRIPTION	BY
B	03-14-13	SHOP AS BUILT	GPN
A	04-10-12	REVISED PER ENGINEERING REVIEW	GPN

AEA PURCHASE ORDER No. REG-12-058 CONTROLLED POWER JOB No. 7455

TITLE: GENERATOR 4 DC CONTROL, SCHEMATIC DIAGRAM

SCALE: NONE	DATE: 03-12-12	DWN. BY: GPN
DWG. No: 7455-5312-D	SHEET: 1 OF 1	CKD. BY: JMD

JOB: AKIAK GENERATOR SWITCHGEAR

NOTICE
THE DRAWINGS, INFORMATION AND SUBJECT MATTER HEREOF ARE THE CONFIDENTIAL, SOLE AND EXCLUSIVE PROPERTY OF CONTROLLED POWER, INC., AND ARE NOT TO BE COPIED, REPRODUCED OR USED IN ANY MANNER FOR ANY PURPOSE WHATSOEVER WITHOUT WRITTEN CONSENT OR DIRECTION.

ALASKA ENERGY AUTHORITY
RURAL ENERGY GROUP
813 W. NORTHERN LIGHTS BLVD.
ANCHORAGE, ALASKA 99503
HTTP://WWW.AIDEA.ORG

Plot date: 2013/3/14 – 8:31

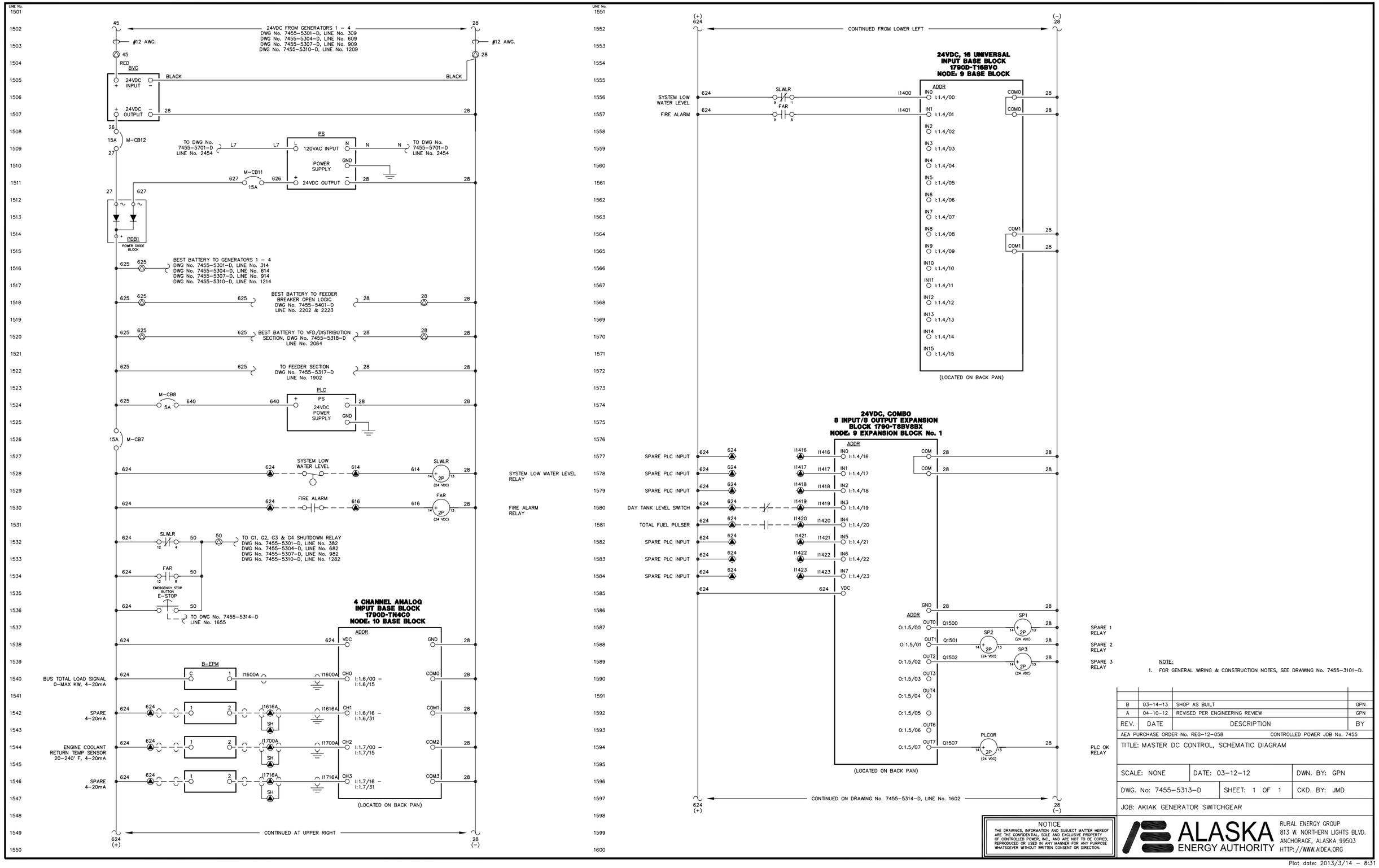

NOTE:
1. FOR GENERAL WIRING & CONSTRUCTION NOTES, SEE DRAWING No. 7455–3101–D.

REV.	DATE	DESCRIPTION	BY
B	03–14–13	SHOP AS BUILT	GPN
A	04–10–12	REVISED PER ENGINEERING REVIEW	GPN

AEA PURCHASE ORDER No. REG–12–058 CONTROLLED POWER JOB No. 7455

TITLE: MASTER DC CONTROL, SCHEMATIC DIAGRAM

SCALE: NONE	DATE: 03–12–12	DWN. BY: GPN
DWG. No: 7455–5313–D	SHEET: 1 OF 1	CKD. BY: JMD

JOB: AKIAK GENERATOR SWITCHGEAR

NOTICE
THE DRAWINGS, INFORMATION AND SUBJECT MATTER HEREOF ARE THE CONFIDENTIAL, SOLE AND EXCLUSIVE PROPERTY OF CONTROLLED POWER, INC., AND ARE NOT TO BE COPIED, REPRODUCED OR USED IN ANY MANNER FOR ANY PURPOSE WHATSOEVER WITHOUT WRITTEN CONSENT OR DIRECTION.

ALASKA ENERGY AUTHORITY
RURAL ENERGY GROUP
813 W. NORTHERN LIGHTS BLVD.
ANCHORAGE, ALASKA 99503
HTTP://WWW.AIDEA.ORG

Plot date: 2013/3/14 – 8:31

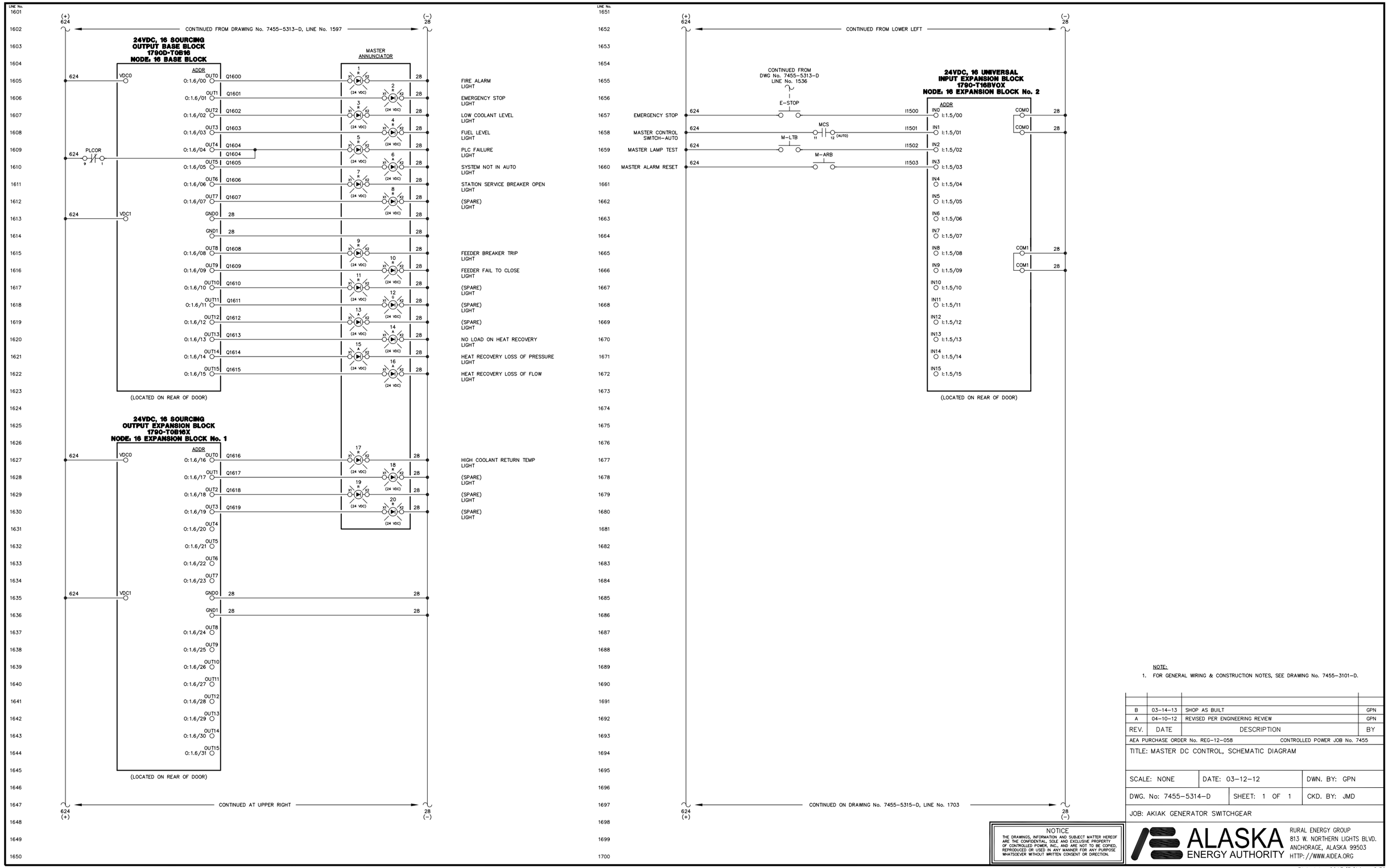

NOTE:

1. FOR GENERAL WIRING & CONSTRUCTION NOTES, SEE DRAWING No. 7455-3101-D.

REV.	DATE	DESCRIPTION	BY
B	03-14-13	SHOP AS BUILT	GPN
A	04-10-12	REVISED PER ENGINEERING REVIEW	GPN

AEA PURCHASE ORDER No. REG-12-058 CONTROLLED POWER JOB No. 7455

TITLE: MASTER DC CONTROL, SCHEMATIC DIAGRAM

SCALE: NONE	DATE: 03-12-12	DWN. BY: GPN
DWG. No: 7455-5314-D	SHEET: 1 OF 1	CKD. BY: JMD

JOB: AKIAK GENERATOR SWITCHGEAR

NOTICE
THE DRAWINGS, INFORMATION AND SUBJECT MATTER HEREOF ARE THE CONFIDENTIAL, SOLE AND EXCLUSIVE PROPERTY OF CONTROLLED POWER, INC., AND ARE NOT TO BE COPIED, REPRODUCED OR USED IN ANY MANNER FOR ANY PURPOSE WHATSOEVER WITHOUT WRITTEN CONSENT OR DIRECTION.

ALASKA ENERGY AUTHORITY
RURAL ENERGY GROUP
813 W. NORTHERN LIGHTS BLVD.
ANCHORAGE, ALASKA 99503
HTTP://WWW.AIDEA.ORG

Plot date: 2013/3/14 - 8:30

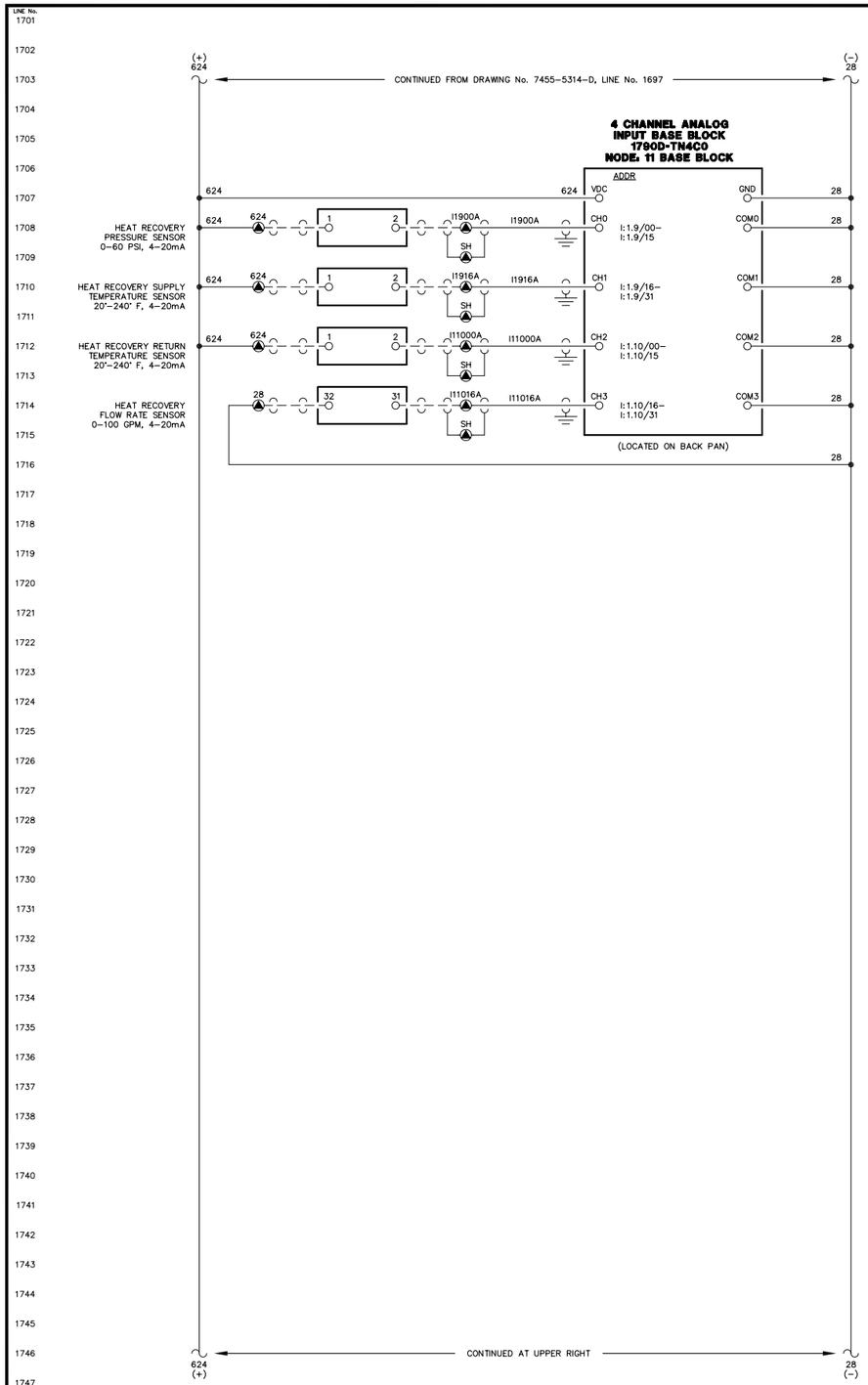

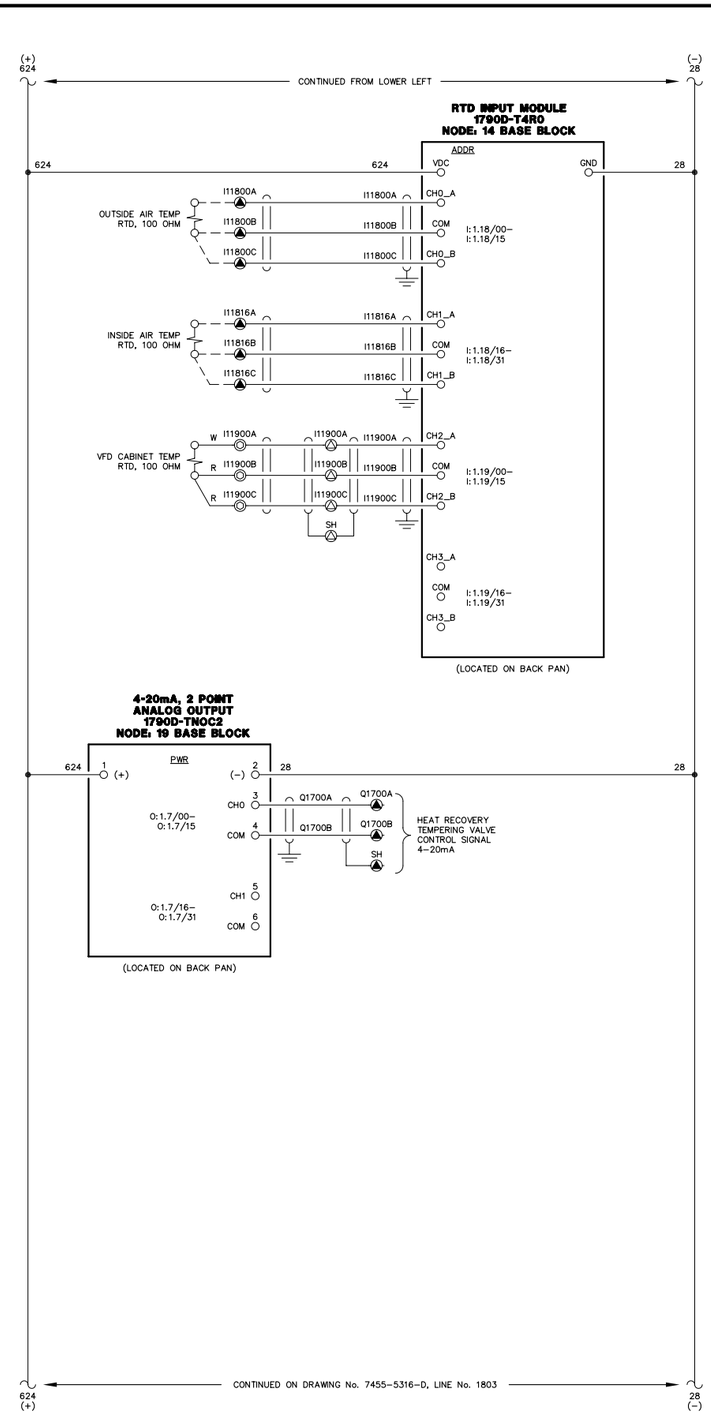

NOTE:

1. FOR GENERAL WIRING & CONSTRUCTION NOTES, SEE DRAWING No. 7455-3101-D.

REV.	DATE	DESCRIPTION	BY
C	03-14-13	SHOP AS BUILT	GPN
B	06-21-12	ADDED ANALOG OUTPUT MODULE	GPN
A	04-10-12	REVISED PER ENGINEERING REVIEW	GPN

AEA PURCHASE ORDER No. REG-12-058 CONTROLLED POWER JOB No. 7455

TITLE: MASTER DC CONTROL, SCHEMATIC DIAGRAM

SCALE: NONE	DATE: 03-12-12	DWN. BY: GPN
DWG. No: 7455-5315-D	SHEET: 1 OF 1	CKD. BY: JMD

JOB: AKIAK GENERATOR SWITCHGEAR

NOTICE
THE DRAWINGS, INFORMATION AND SUBJECT MATTER HEREOF ARE THE CONFIDENTIAL, SOLE AND EXCLUSIVE PROPERTY OF CONTROLLED POWER, INC., AND ARE NOT TO BE COPIED, REPRODUCED OR USED IN ANY MANNER FOR ANY PURPOSE WHATSOEVER WITHOUT WRITTEN CONSENT OR DIRECTION.

ALASKA ENERGY AUTHORITY
RURAL ENERGY GROUP
813 W. NORTHERN LIGHTS BLVD.
ANCHORAGE, ALASKA 99503
HTTP://WWW.AIDEA.ORG

Plot date: 2013/3/14 - 8:30

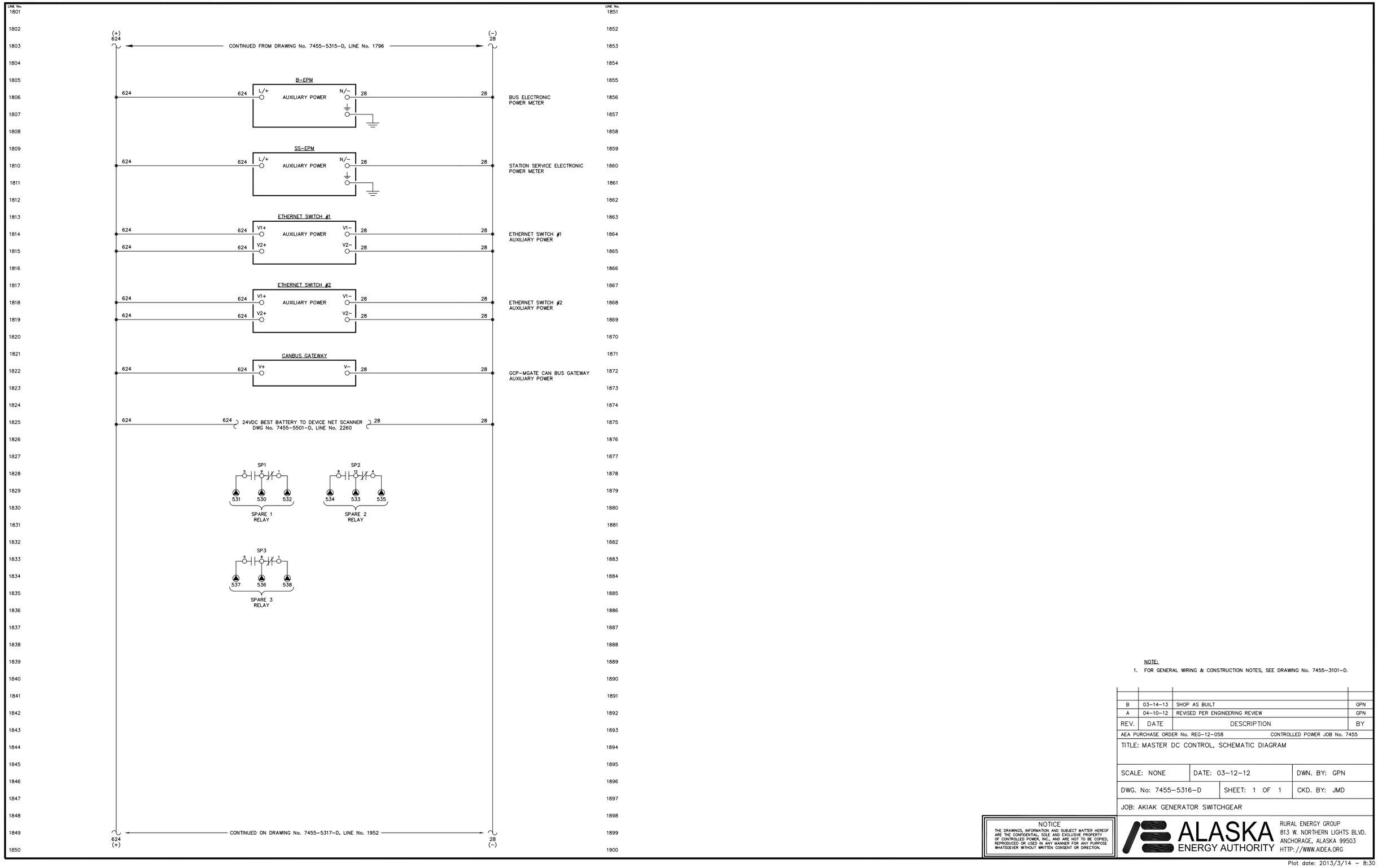

NOTE:

1. FOR GENERAL WIRING & CONSTRUCTION NOTES, SEE DRAWING No. 7455-3101-D.

REV.	DATE	DESCRIPTION	BY
B	03-14-13	SHOP AS BUILT	GPN
A	04-10-12	REVISED PER ENGINEERING REVIEW	GPN

AEA PURCHASE ORDER No. REG-12-058 CONTROLLED POWER JOB No. 7455

TITLE: MASTER DC CONTROL, SCHEMATIC DIAGRAM

SCALE: NONE	DATE: 03-12-12	DWN. BY: GPN
DWG. No: 7455-5316-D	SHEET: 1 OF 1	CKD. BY: JMD

JOB: AKIAK GENERATOR SWITCHGEAR

NOTICE
THE DRAWINGS, INFORMATION AND SUBJECT MATTER HEREOF ARE THE CONFIDENTIAL, SOLE AND EXCLUSIVE PROPERTY OF CONTROLLED POWER, INC., AND ARE NOT TO BE COPIED, REPRODUCED OR USED IN ANY MANNER FOR ANY PURPOSE WHATSOEVER WITHOUT WRITTEN CONSENT OR DIRECTION.

ALASKA ENERGY AUTHORITY
RURAL ENERGY GROUP
813 W. NORTHERN LIGHTS BLVD.
ANCHORAGE, ALASKA 99503
HTTP://WWW.AIDEA.ORG

Plot date: 2013/3/14 – 8:30

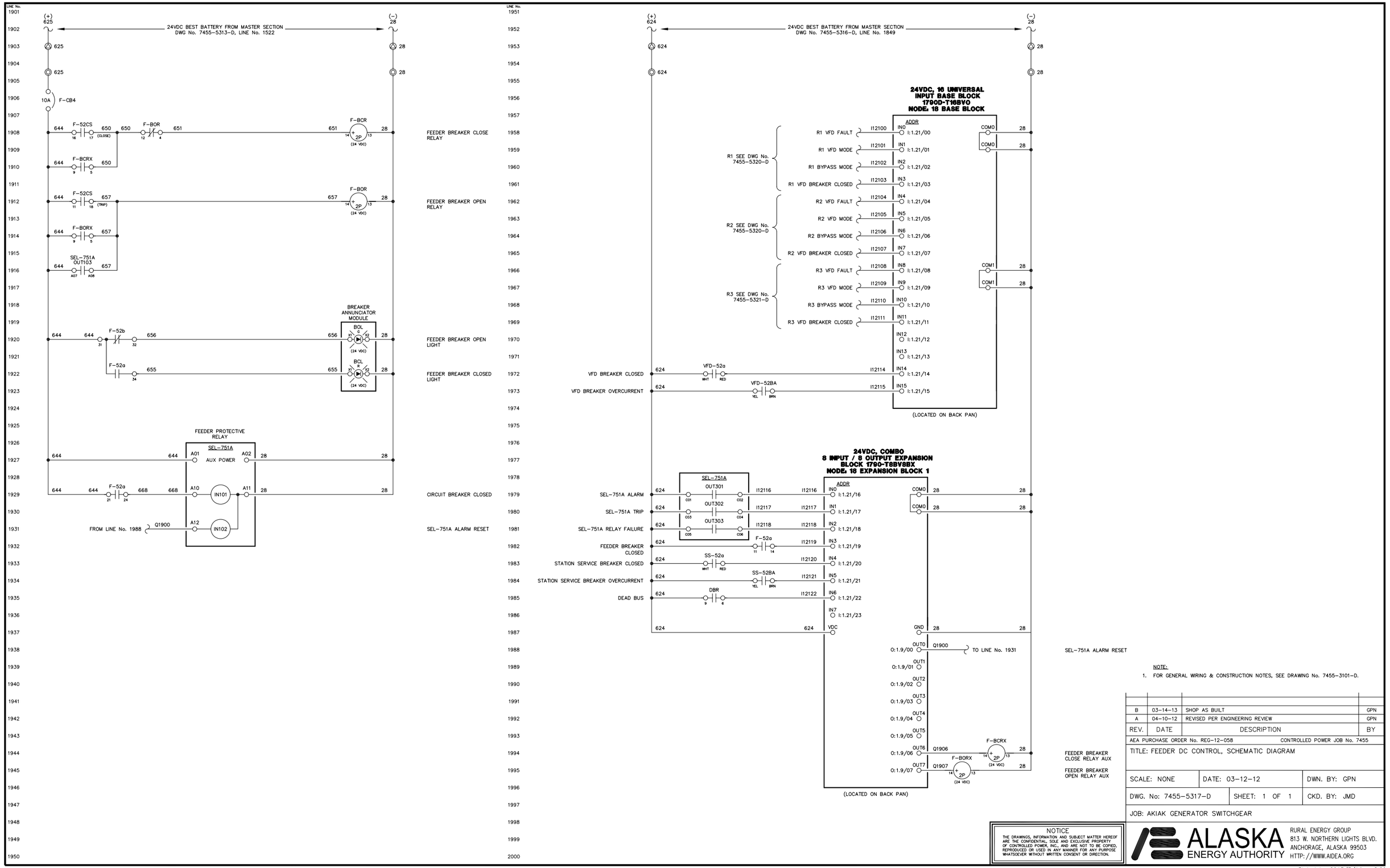

NOTE:
1. FOR GENERAL WIRING & CONSTRUCTION NOTES, SEE DRAWING No. 7455-3101-D.

REV.	DATE	DESCRIPTION	BY
B	03-14-13	SHOP AS BUILT	GPN
A	04-10-12	REVISED PER ENGINEERING REVIEW	GPN

AEA PURCHASE ORDER No. REG-12-058 CONTROLLED POWER JOB No. 7455

TITLE: FEEDER DC CONTROL, SCHEMATIC DIAGRAM

SCALE: NONE | DATE: 03-12-12 | DWN. BY: GPN

DWG. No: 7455-5317-D | SHEET: 1 OF 1 | CKD. BY: JMD

JOB: AKIAK GENERATOR SWITCHGEAR

NOTICE
THE DRAWINGS, INFORMATION AND SUBJECT MATTER HEREOF ARE THE CONFIDENTIAL, SOLE AND EXCLUSIVE PROPERTY OF CONTROLLED POWER, INC., AND ARE NOT TO BE COPIED, REPRODUCED OR USED IN ANY MANNER FOR ANY PURPOSE WHATSOEVER WITHOUT WRITTEN CONSENT OR DIRECTION.

ALASKA ENERGY AUTHORITY
RURAL ENERGY GROUP
813 W. NORTHERN LIGHTS BLVD.
ANCHORAGE, ALASKA 99503
HTTP://WWW.AIDEA.ORG

Plot date: 2013/3/14 – 8:29

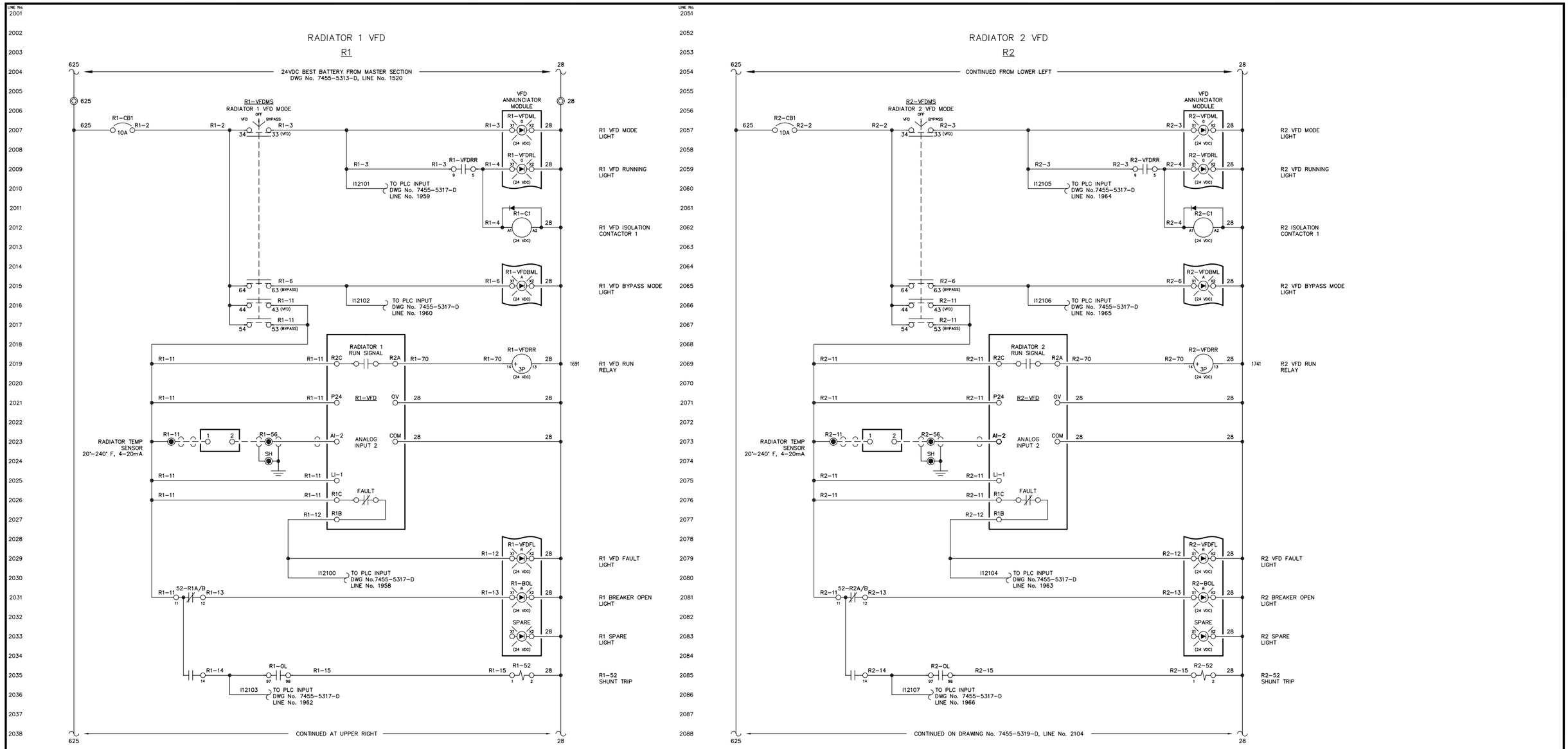

NOTE:

1. FOR GENERAL WIRING & CONSTRUCTION NOTES, SEE DRAWING No. 7455-3101-D.

REV.	DATE	DESCRIPTION	BY
B	03-14-13	SHOP AS BUILT	GPN
A	04-10-12	REVISED PER ENGINEERING REVIEW	GPN

AEA PURCHASE ORDER No. REG-12-058 CONTROLLED POWER JOB No. 7455

TITLE: VFD DC CONTROL, SCHEMATIC DIAGRAM

SCALE: NONE | DATE: 03-12-12 | DWN. BY: GPN

DWG. No: 7455-5318-D | SHEET: 1 OF 1 | CKD. BY: JMD

JOB: AKIAK GENERATOR SWITCHGEAR

NOTICE
THE DRAWINGS, INFORMATION AND SUBJECT MATTER HEREOF ARE THE CONFIDENTIAL, SOLE AND EXCLUSIVE PROPERTY OF CONTROLLED POWER, INC., AND ARE NOT TO BE COPIED, REPRODUCED OR USED IN ANY MANNER FOR ANY PURPOSE WHATSOEVER WITHOUT WRITTEN CONSENT OR DIRECTION.

ALASKA ENERGY AUTHORITY
RURAL ENERGY GROUP
813 W. NORTHERN LIGHTS BLVD.
ANCHORAGE, ALASKA 99503
HTTP://WWW.AIDEA.ORG

Plot date: 2013/3/14 - 8:29

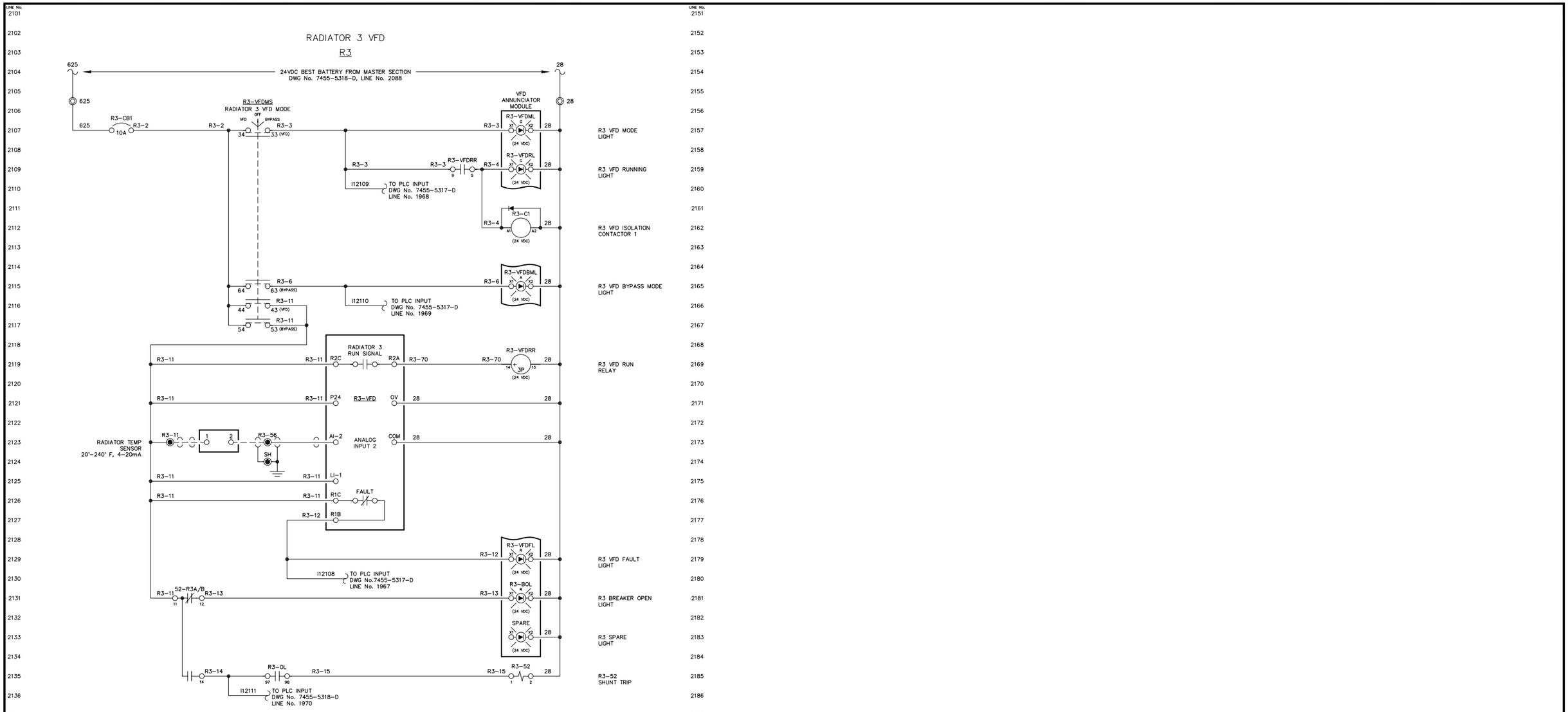

NOTE:

1. FOR GENERAL WIRING & CONSTRUCTION NOTES, SEE DRAWING No. 7455-3101-D.

REV.	DATE	DESCRIPTION	BY
B	03-14-13	SHOP AS BUILT	GPN
A	04-10-12	REVISED PER ENGINEERING REVIEW	GPN

AEA PURCHASE ORDER No. REG-12-058 CONTROLLED POWER JOB No. 7455

TITLE: VFD DC CONTROL, SCHEMATIC DIAGRAM

SCALE: NONE	DATE: 03-12-12	DWN. BY: GPN
DWG. No: 7455-5319-D	SHEET: 1 OF 1	CKD. BY: JMD

JOB: AKIAK GENERATOR SWITCHGEAR

NOTICE
THE DRAWINGS, INFORMATION AND SUBJECT MATTER HEREOF ARE THE CONFIDENTIAL, SOLE AND EXCLUSIVE PROPERTY OF CONTROLLED POWER, INC., AND ARE NOT TO BE COPIED, REPRODUCED OR USED IN ANY MANNER FOR ANY PURPOSE WHATSOEVER WITHOUT WRITTEN CONSENT OR DIRECTION.

ALASKA ENERGY AUTHORITY
RURAL ENERGY GROUP
813 W. NORTHERN LIGHTS BLVD.
ANCHORAGE, ALASKA 99503
HTTP://WWW.AIDEA.ORG

Plot date: 2013/3/14 - 8:29

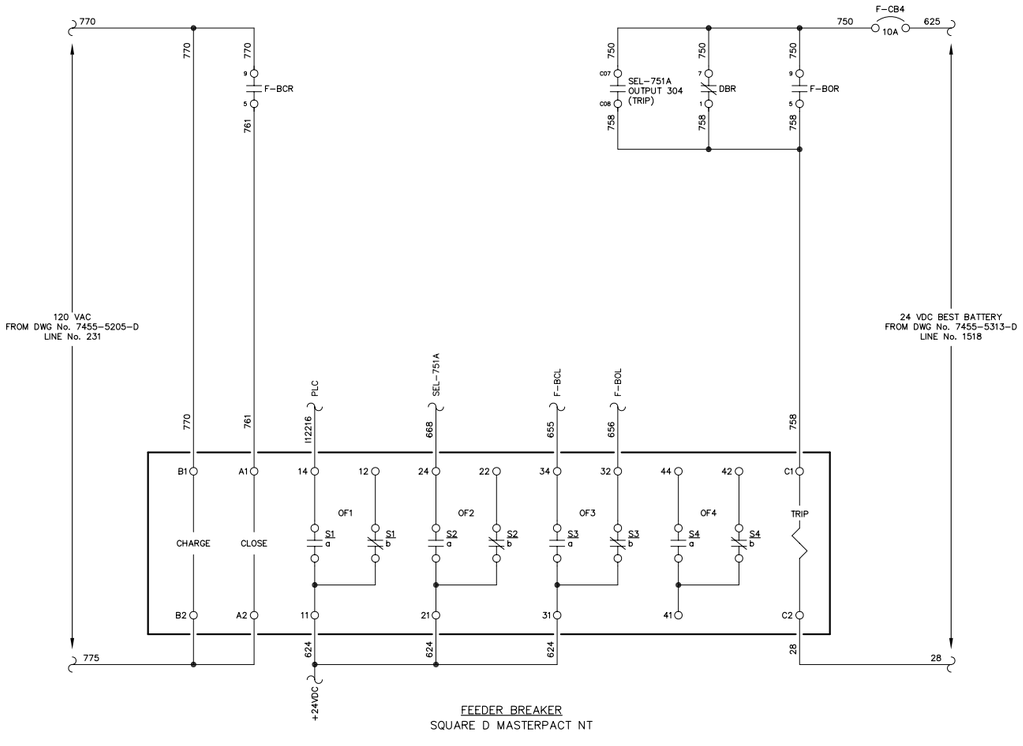

FEEDER BREAKER
SQUARE D MASTERPACT NT

NOTE:

1. FOR GENERAL WIRING & CONSTRUCTION NOTES, SEE DRAWING No. 7455-3101-D.

REV.	DATE	DESCRIPTION	BY
C	03-14-13	SHOP AS BUILT	GPN
A	04-10-12	REVISED PER ENGINEERING REVIEW	GPN

AEA PURCHASE ORDER No. REG-12-058 CONTROLLED POWER JOB No. 7455

TITLE: FEEDER BREAKER CONTROL, SCHEMATIC DIAGRAM

SCALE: NONE	DATE: 03-12-12	DWN. BY: GPN
DWG. No: 7455-5401-D	SHEET: 1 OF 1	CKD. BY: JMD

JOB: AKIAK GENERATOR SWITCHGEAR

NOTICE
THE DRAWINGS, INFORMATION AND SUBJECT MATTER HEREOF ARE THE CONFIDENTIAL, SOLE AND EXCLUSIVE PROPERTY OF CONTROLLED POWER, INC., AND ARE NOT TO BE COPIED, REPRODUCED OR USED IN ANY MANNER FOR ANY PURPOSE WHATSOEVER WITHOUT WRITTEN CONSENT OR DIRECTION.

ALASKA ENERGY AUTHORITY
RURAL ENERGY GROUP
813 W. NORTHERN LIGHTS BLVD.
ANCHORAGE, ALASKA 99503
HTTP://WWW.AIDEA.ORG

Plot date: 2013/3/14 - 8:28

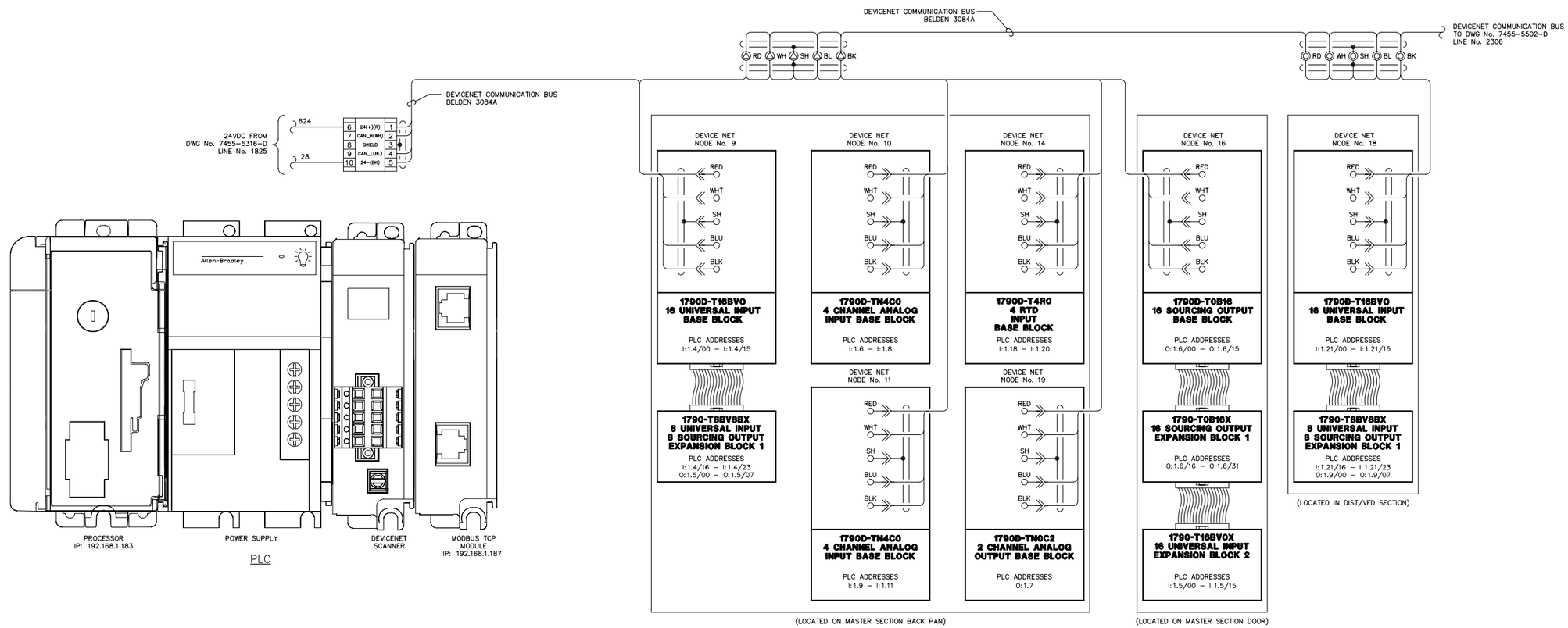

NOTE:

1. FOR GENERAL WIRING & CONSTRUCTION NOTES, SEE DRAWING No. 7455-3101-D.

REV.	DATE	DESCRIPTION	BY
C	03-14-13	SHOP AS BUILT	GPN
B	06-21-12	ADDED ANALOG OUTPUT MODULE	GPN
A	04-10-12	REVISED PER ENGINEERING REVIEW	GPN

AEA PURCHASE ORDER No. REG-12-058 CONTROLLED POWER JOB No. 7455

TITLE: PLC COMMUNICATION, SCHEMATIC DIAGRAM

SCALE: NONE	DATE: 03-12-12	DWN. BY: GPN
DWG. No: 7455-5501-D	SHEET: 1 OF 1	CKD. BY: JMD

JOB: AKIAK GENERATOR SWITCHGEAR

NOTICE
THE DRAWINGS, INFORMATION AND SUBJECT MATTER HEREOF ARE THE CONFIDENTIAL, SOLE AND EXCLUSIVE PROPERTY OF CONTROLLED POWER, INC., AND ARE NOT TO BE COPIED, REPRODUCED OR USED IN ANY MANNER FOR ANY PURPOSE WHATSOEVER WITHOUT WRITTEN CONSENT OR DIRECTION.

ALASKA ENERGY AUTHORITY
RURAL ENERGY GROUP
813 W. NORTHERN LIGHTS BLVD.
ANCHORAGE, ALASKA 99503
HTTP://WWW.AIDEA.ORG

Plot date: 2013/3/14 – 8:28

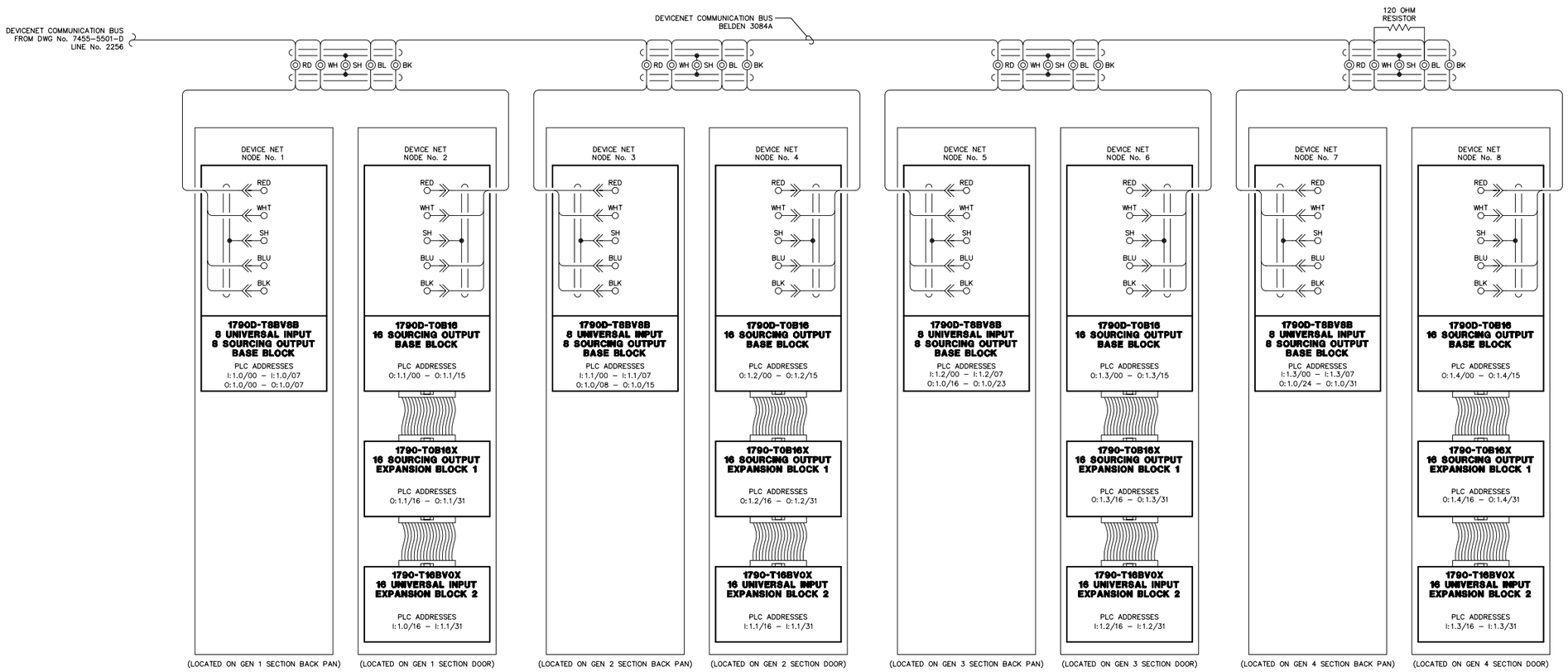

NOTE:

1. FOR GENERAL WIRING & CONSTRUCTION NOTES, SEE DRAWING No. 7455–3101–D.

REV.	DATE	DESCRIPTION	BY
B	03–14–13	SHOP AS BUILT	GPN
A	04–10–12	REVISED PER ENGINEERING REVIEW	GPN

AEA PURCHASE ORDER No. REG–12–058 CONTROLLED POWER JOB No. 7455

TITLE: PLC COMMUNICATION, SCHEMATIC DIAGRAM

SCALE: NONE | DATE: 03–12–12 | DWN. BY: GPN

DWG. No: 7455–5502–D | SHEET: 1 OF 1 | CKD. BY: JMD

JOB: AKIAK GENERATOR SWITCHGEAR

NOTICE
THE DRAWINGS, INFORMATION AND SUBJECT MATTER HEREOF ARE THE CONFIDENTIAL, SOLE AND EXCLUSIVE PROPERTY OF CONTROLLED POWER, INC., AND ARE NOT TO BE COPIED, REPRODUCED OR USED IN ANY MANNER FOR ANY PURPOSE WHATSOEVER WITHOUT WRITTEN CONSENT OR DIRECTION.

ALASKA ENERGY AUTHORITY
RURAL ENERGY GROUP
813 W. NORTHERN LIGHTS BLVD.
ANCHORAGE, ALASKA 99503
HTTP://WWW.AIDEA.ORG

Plot date: 2013/3/14 – 8:28

DEVICE	IP ADDRESS
SERVER	192.168.1.142
F SEL-751A	192.168.1.155
R1 VFD	192.168.1.171
R2 VFD	192.168.1.172
R3 VFD	192.168.1.173
OIU	192.168.1.182
PLC CPU	192.168.1.183
GCP MGATE	192.168.1.186
PLC PROSOFT	192.168.1.187
BUS EPM	192.168.1.190
SS EPM	192.168.1.191

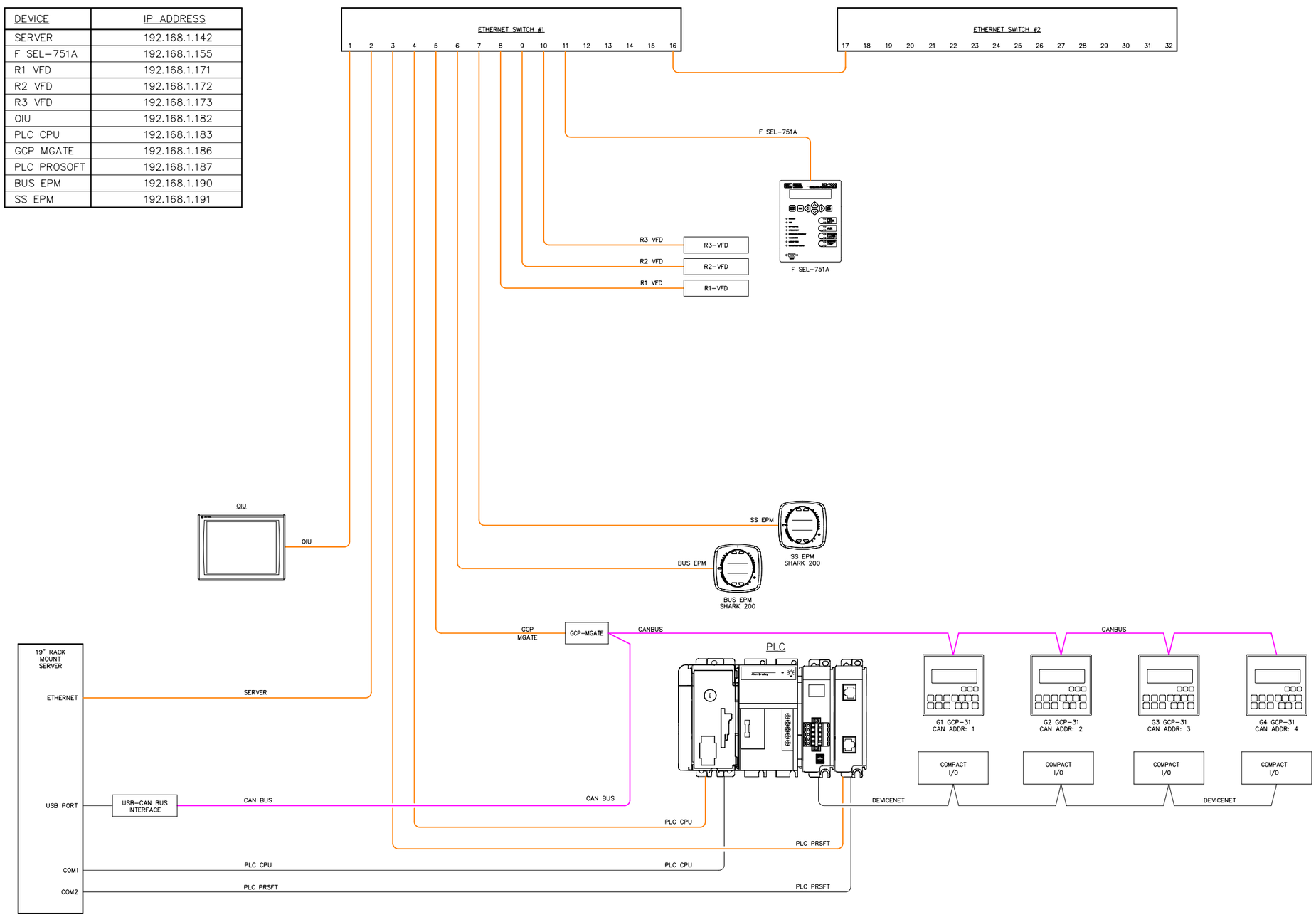

NOTE:

1. FOR GENERAL WIRING & CONSTRUCTION NOTES, SEE DRAWING No. 7455-3101-D.

REV.	DATE	DESCRIPTION	BY
B	03-14-13	SHOP AS BUILT	GPN
A	04-10-12	REVISED PER ENGINEERING REVIEW	GPN

AEA PURCHASE ORDER No. REG-12-058 CONTROLLED POWER JOB No. 7455

TITLE: COMMUNICATION NETWORK DIAGRAM

SCALE: NONE | DATE: 03-12-12 | DWN. BY: GPN

DWG. No: 7455-5601-D | SHEET: 1 OF 1 | CKD. BY: JMD

JOB: AKIAK GENERATOR SWITCHGEAR

NOTICE
THE DRAWINGS, INFORMATION AND SUBJECT MATTER HEREOF ARE THE CONFIDENTIAL, SOLE AND EXCLUSIVE PROPERTY OF CONTROLLED POWER, INC., AND ARE NOT TO BE COPIED, REPRODUCED OR USED IN ANY MANNER FOR ANY PURPOSE WHATSOEVER WITHOUT WRITTEN CONSENT OR DIRECTION.

ALASKA ENERGY AUTHORITY
RURAL ENERGY GROUP
813 W. NORTHERN LIGHTS BLVD.
ANCHORAGE, ALASKA 99503
HTTP://WWW.AIDEA.ORG

Plot date: 2013/3/14 - 8:27

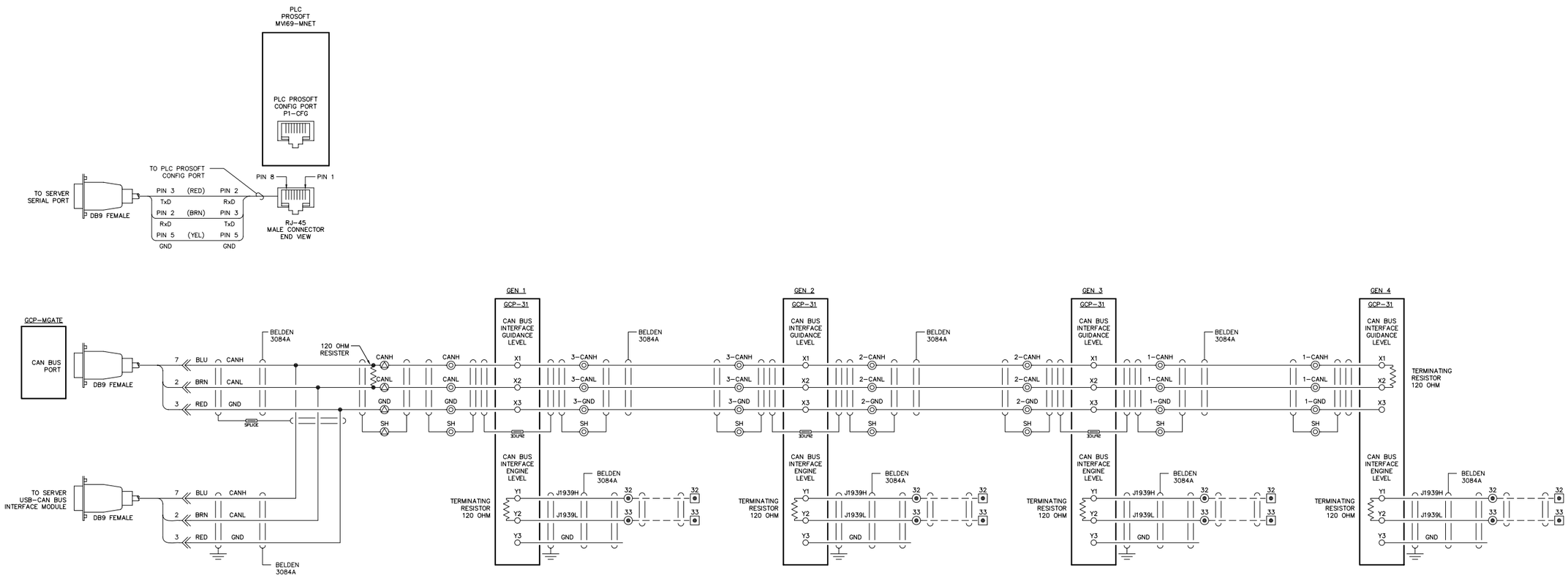

NOTE:

1. FOR GENERAL WIRING & CONSTRUCTION NOTES, SEE DRAWING No. 7455-3101-D.

REV.	DATE	DESCRIPTION	BY
B	03-14-13	SHOP AS BUILT	GPN
A	04-10-12	REVISED PER ENGINEERING REVIEW	GPN

AEA PURCHASE ORDER No. REG-12-058 CONTROLLED POWER JOB No. 7455

TITLE: COMMUNICATION NETWORK DIAGRAM

SCALE: NONE | DATE: 03-12-12 | DWN. BY: GPN

DWG. No: 7455-5602-D | SHEET: 1 OF 1 | CKD. BY: JMD

JOB: AKIAK GENERATOR SWITCHGEAR

NOTICE
THE DRAWINGS, INFORMATION AND SUBJECT MATTER HEREOF ARE THE CONFIDENTIAL, SOLE AND EXCLUSIVE PROPERTY OF CONTROLLED POWER, INC., AND ARE NOT TO BE COPIED, REPRODUCED OR USED IN ANY MANNER FOR ANY PURPOSE WHATSOEVER WITHOUT WRITTEN CONSENT OR DIRECTION.

ALASKA ENERGY AUTHORITY
RURAL ENERGY GROUP
813 W. NORTHERN LIGHTS BLVD.
ANCHORAGE, ALASKA 99503
HTTP://WWW.AIDEA.ORG

Plot date: 2013/3/14 - 8:27

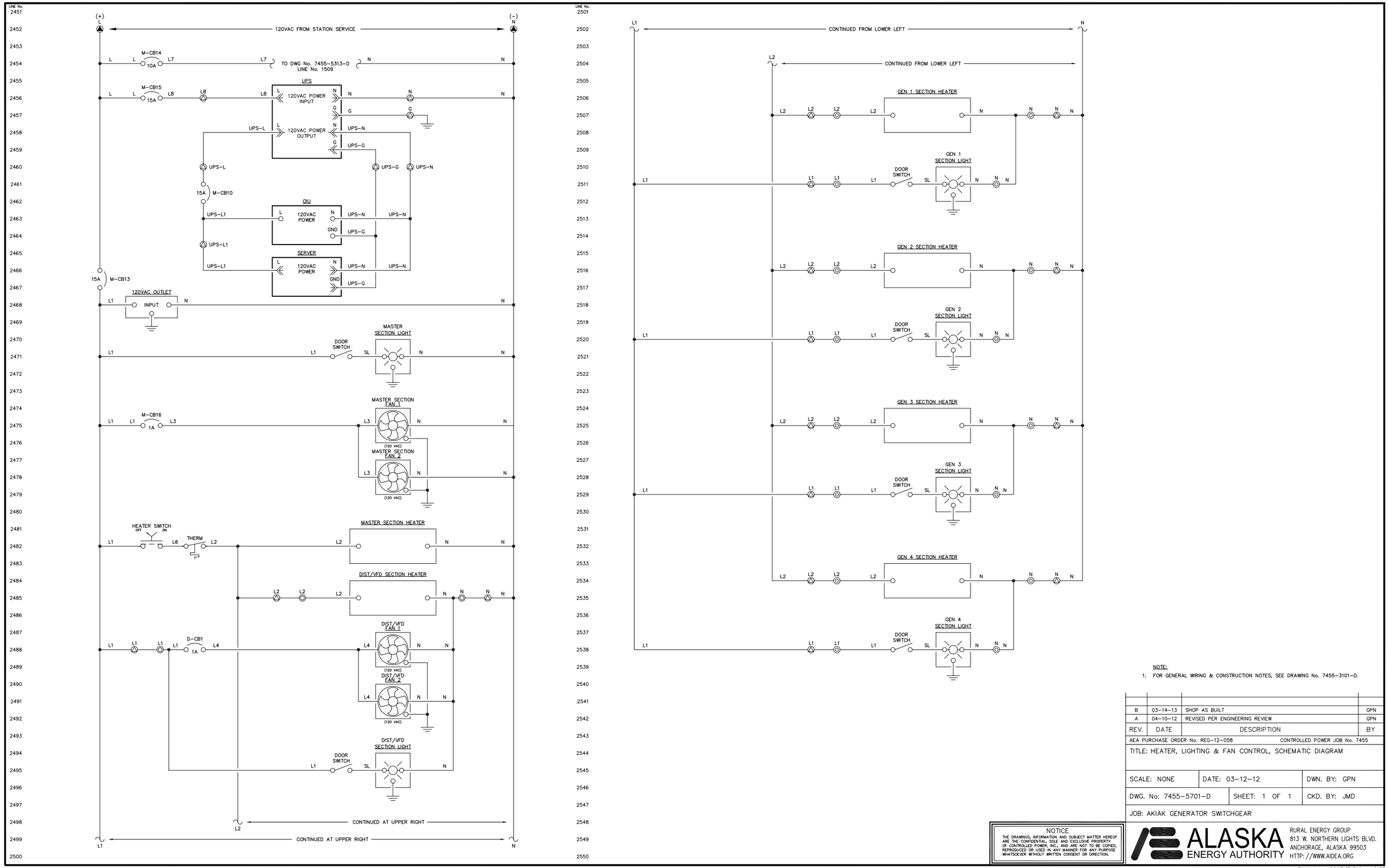

NOTE:

1. FOR GENERAL WIRING & CONSTRUCTION NOTES, SEE DRAWING No. 7455-3101-D.

REV.	DATE	DESCRIPTION	BY
B	03-14-13	SHOP AS BUILT	GPN
A	04-10-12	REVISED PER ENGINEERING REVIEW	GPN

AEA PURCHASE ORDER No. REG-12-058 — CONTROLLED POWER JOB No. 7455

TITLE: HEATER, LIGHTING & FAN CONTROL, SCHEMATIC DIAGRAM

SCALE: NONE	DATE: 03-12-12	DWN. BY: GPN
DWG. No: 7455-5701-D	SHEET: 1 OF 1	CKD. BY: JMD

JOB: AKIAK GENERATOR SWITCHGEAR

NOTICE
THE DRAWINGS, INFORMATION AND SUBJECT MATTER HEREOF ARE THE CONFIDENTIAL, SOLE AND EXCLUSIVE PROPERTY OF CONTROLLED POWER, INC., AND ARE NOT TO BE COPIED, REPRODUCED OR USED IN ANY MANNER FOR ANY PURPOSE WHATSOEVER WITHOUT WRITTEN CONSENT OR DIRECTION.

ALASKA ENERGY AUTHORITY
RURAL ENERGY GROUP
813 W. NORTHERN LIGHTS BLVD.
ANCHORAGE, ALASKA 99503
HTTP://WWW.AIDEA.ORG

Plot date: 2013/3/14 – 8:27

MASTER CONTROL SWITCH – MCS

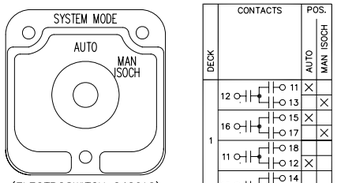

(ELECTROSWITCH 24201C)
KNURLED HANDLE
QTY 1

BREAKER CONTROL SWITCH – 52CS

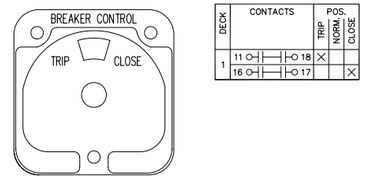

(ELECTROSWITCH 2438D)
PISTOL GRIP HANDLE
SPRING RETURN TO CENTER
QTY 1

GENERATOR LOCKOUT SWITCH – GLS

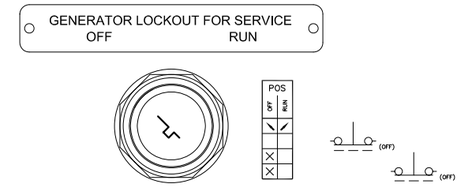

KEY OPERATED
2 POS MAINTAINED
QTY 4

HEATER CONTROL SWITCH – HCS

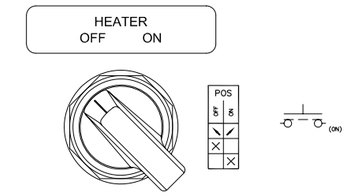

MAINTAINED
LOCATED ON MASTER
BACK PAN

VARIABLE FREQUENCY DRIVE MODE SWITCH – VFDMS

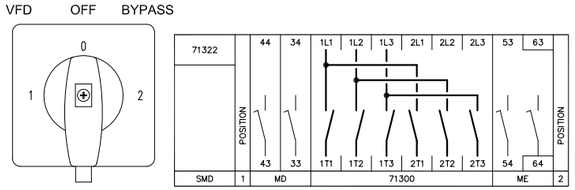

3 POS MAINTAINED
QTY 3

NOTE:
1. FOR GENERAL WIRING & CONSTRUCTION NOTES, SEE DRAWING No. 7455–3101–D.

REV.	DATE	DESCRIPTION	BY
B	03–14–13	SHOP AS BUILT	GPN
A	04–10–12	REVISED PER ENGINEERING REVIEW	GPN

AEA PURCHASE ORDER No. REG–12–058 CONTROLLED POWER JOB No. 7455

TITLE: CONTROL SWITCH TARGET DIAGRAM

SCALE: NONE	DATE: 03–12–12	DWN. BY: GPN
DWG. No: 7455–6101–D	SHEET: 1 OF 1	CKD. BY: JMD

JOB: AKIAK GENERATOR SWITCHGEAR

NOTICE
THE DRAWINGS, INFORMATION AND SUBJECT MATTER HEREOF ARE THE CONFIDENTIAL, SOLE AND EXCLUSIVE PROPERTY OF CONTROLLED POWER, INC., AND ARE NOT TO BE COPIED, REPRODUCED OR USED IN ANY MANNER FOR ANY PURPOSE WHATSOEVER WITHOUT WRITTEN CONSENT OR DIRECTION.

ALASKA ENERGY AUTHORITY
RURAL ENERGY GROUP
813 W. NORTHERN LIGHTS BLVD.
ANCHORAGE, ALASKA 99503
HTTP://WWW.AIDEA.ORG

Plot date: 2013/3/14 – 8:22

8" × 4"

MANUFACTURED BY:

CONTROLLED POWER, INC.

17909 BOTHELL EVERETT HWY. S.E. #102
BOTHELL, WA. 98012
(425)-485-1778
SERIAL NUMBER: 7455

NP. TEXT 1/4" QUANTITY 1 SCALE 1/1 — SEE NOTE 4

8" × 1"

MASTER CONTROL

NP. TEXT 1/2" QUANTITY 1 SCALE 1/1

8" × 1"

GENERATOR 1

NP. TEXT 1/2" QUANTITY 1 SCALE 1/1

8" × 1"

GENERATOR 2

NP. TEXT 1/2" QUANTITY 1 SCALE 1/1

8" × 1"

GENERATOR 3

NP. TEXT 1/2" QUANTITY 1 SCALE 1/1

8" × 1"

GENERATOR 4

NP. TEXT 1/2" QUANTITY 1 SCALE 1/1

8" × 1"

VFD/DISTRIBUTION

NP. TEXT 1/2" QUANTITY 1 SCALE 1/1

4" × 1"

210 KW

NP. TEXT 1/2" QUANTITY 4 SCALE 1/1

5" × 1"

RADIATOR FAN 1

NP. 13 TEXT 1/4" QUANTITY 1 SCALE 1/1

5" × 1"

RADIATOR FAN 2

NP. TEXT 1/4" QUANTITY 1 SCALE 1/1

5" × 1"

RADIATOR FAN 3

NP. TEXT 1/4" QUANTITY 1 SCALE 1/1

4" × 1"

GENERATOR LOCKOUT FOR SERVICE
OFF RUN

NP. TEXT 1/8" QUANTITY 4 SCALE 1/1

3" × 1"

GENERATOR 1

NP. TEXT 1/8" QUANTITY 1 SCALE 1/1

3" × 1"

GENERATOR 2

NP. TEXT 1/8" QUANTITY 1 SCALE 1/1

3" × 1"

GENERATOR 3

NP. TEXT 1/8" QUANTITY 1 SCALE 1/1

3" × 1"

GENERATOR 4

NP. TEXT 1/8" QUANTITY 1 SCALE 1/1

3" × 1"

BUS TOTALIZING

NP. TEXT 1/8" QUANTITY 1 SCALE 1/1

9" × 1"

$1\frac{1}{2}$" 3" 3" $1\frac{1}{2}$"

LAMP TEST | EMERGENCY STOP | ALARM RESET

NP. TEXT 1/8" QUANTITY 1 SCALE 1/1

3" × 1"

FEEDER

NP. TEXT 1/8" QUANTITY 1 SCALE 1/1

3" × 1"

STATION SERVICE

NP. TEXT 1/8" QUANTITY 2 SCALE 1/1

3" × 1"

RADIATOR FAN 1
VFD OFF BYPASS

NP. TEXT 1/8" QUANTITY 1 SCALE 1/1

3" × 1"

RADIATOR FAN 2
VFD OFF BYPASS

NP. TEXT 1/8" QUANTITY 1 SCALE 1/1

3" × 1"

RADIATOR FAN 3
VFD OFF BYPASS

NP. TEXT 1/8" QUANTITY 1 SCALE 1/1

3" × 1"

VFD MAIN

NP. TEXT 1/8" QUANTITY 1 SCALE 1/1

$2\frac{1}{2}$" × 1"

HEATER
OFF ON

NP. TEXT 1/8" QUANTITY 1 SCALE 1/1

NO MOUNTING HOLES

NOTES:

1. ALL NAMEPLATES SHALL BE BLACK FACE WITH WHITE LETTERS EXCEPT AS NOTED.
2. ALL NAMEPLATES SHALL HAVE PRESSURE SENSITIVE ADHESIVE ON BACK, 100 % COVERAGE.
3. ALL NAMEPLATES SHALL HAVE MOUNTING HOLES DRILLED AS INDICATED.
4. INDICATES THAT NAMEPLATE SHALL BE BRUSHED ALUMINUM WITH BLACK ENGRAVED LETTERS.

REV.	DATE	DESCRIPTION	BY
B	03-14-13	SHOP AS BUILT	GPN
A	04-10-12	REVISED PER ENGINEERING REVIEW	GPN

AEA PURCHASE ORDER No. REG-12-058 CONTROLLED POWER JOB No. 7455

TITLE: NAMEPLATE ENGRAVING SCHEDULE, FABRICATION DIAGRAM

SCALE: NONE	DATE: 03-12-12	DWN. BY: GPN
DWG. No: 7455-6201-D	SHEET: 1 OF 1	CKD. BY: JMD

JOB: AKIAK GENERATOR SWITCHGEAR

NOTICE
THE DRAWINGS, INFORMATION AND SUBJECT MATTER HEREOF ARE THE CONFIDENTIAL, SOLE AND EXCLUSIVE PROPERTY OF CONTROLLED POWER, INC., AND ARE NOT TO BE COPIED, REPRODUCED OR USED IN ANY MANNER FOR ANY PURPOSE WHATSOEVER WITHOUT WRITTEN CONSENT OR DIRECTION.

ALASKA ENERGY AUTHORITY
RURAL ENERGY GROUP
813 W. NORTHERN LIGHTS BLVD.
ANCHORAGE, ALASKA 99503
HTTP://WWW.AIDEA.ORG

Plot date: 2013/3/14 – 8:22

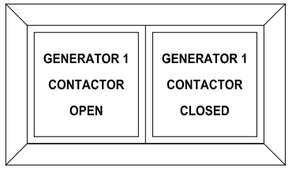

GEN 1 BREAKER ANNUNCIATOR
QTY 1

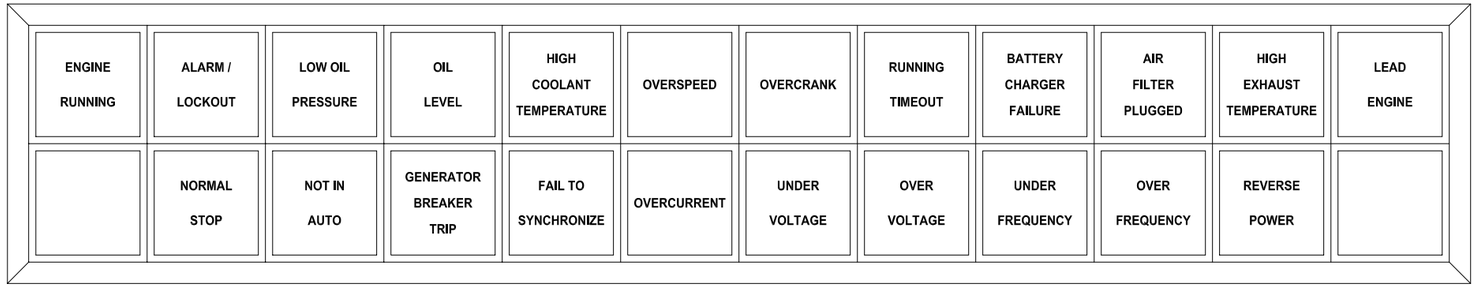

GENERATOR ANNUNCIATOR
QTY 4

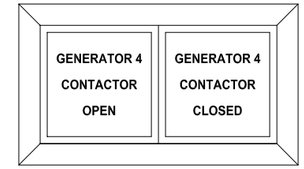

GEN 4 BREAKER ANNUNCIATOR
QTY 1

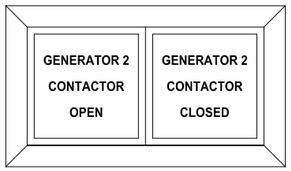

GEN 2 BREAKER ANNUNCIATOR
QTY 1

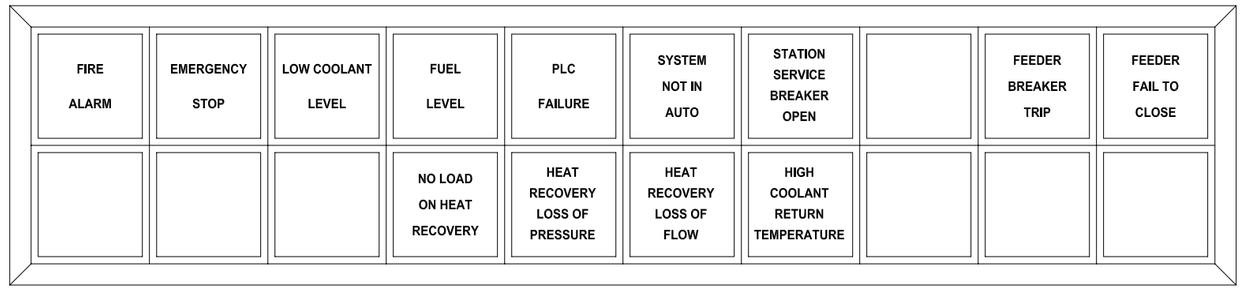

MASTER ANNUNCIATOR
QTY 1

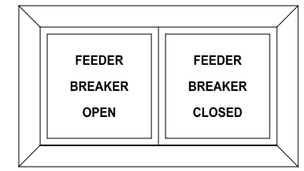

FEEDER BREAKER ANNUNCIATOR
QTY 1

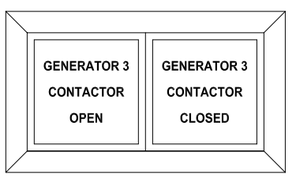

GEN 3 BREAKER ANNUNCIATOR
QTY 1

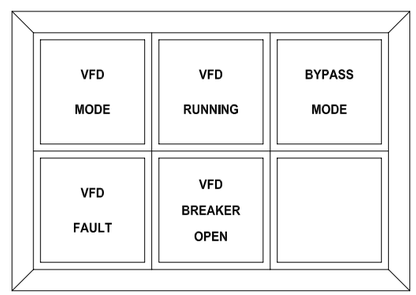

VFD ANNUNCIATOR
QTY 3

REV.	DATE	DESCRIPTION	BY
B	03-14-13	SHOP AS BUILT	GPN
A	04-10-12	REVISED PER ENGINEERING REVIEW	GPN

AEA PURCHASE ORDER No. REG-12-058 CONTROLLED POWER JOB No. 7455

TITLE: ANNUNCIATOR WINDOWS, FABRICATION DIAGRAM

SCALE: NONE | DATE: 03-12-12 | DWN. BY: GPN

DWG. No: 7455-6202-D | SHEET: 1 OF 1 | CKD. BY: JMD

JOB: AKIAK GENERATOR SWITCHGEAR

NOTICE
THE DRAWINGS, INFORMATION AND SUBJECT MATTER HEREOF ARE THE CONFIDENTIAL, SOLE AND EXCLUSIVE PROPERTY OF CONTROLLED POWER, INC., AND ARE NOT TO BE COPIED, REPRODUCED OR USED IN ANY MANNER FOR ANY PURPOSE WHATSOEVER WITHOUT WRITTEN CONSENT OR DIRECTION.

ALASKA ENERGY AUTHORITY
RURAL ENERGY GROUP
813 W. NORTHERN LIGHTS BLVD.
ANCHORAGE, ALASKA 99503
HTTP://WWW.AIDEA.ORG

Plot date: 2013/3/14 – 8:21

MASTER CONTROL

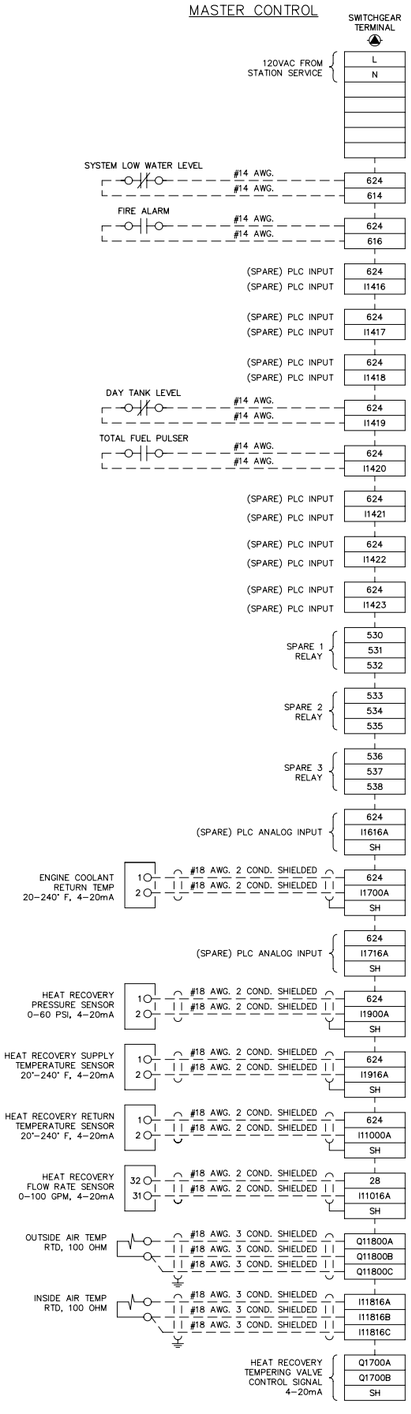

VFD/DISTRIBUTION

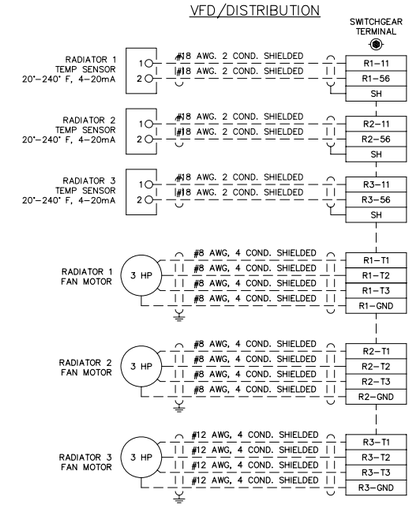

NOTE:

1. FOR GENERAL WIRING & CONSTRUCTION NOTES, SEE DRAWING No. 7455–3101–D.

REV.	DATE	DESCRIPTION	BY
C	03–14–13	SHOP AS BUILT	GPN
B	06–21–12	ADDED TERMINALS FOR ANALOG OUTPUT MODULE	GPN
A	04–10–12	REVISED PER ENGINEERING REVIEW	GPN

AEA PURCHASE ORDER No. REG–11–044 CONTROLLED POWER JOB No. 7455

TITLE: INTERCONNECTION DIAGRAM

SCALE: NONE	DATE: 03–12–12	DWN. BY: GPN
DWG. No: 7455–7101–D	SHEET: 1 OF 1	CKD. BY: JMD

JOB: AKIAK GENERATOR SWITCHGEAR

NOTICE
THE DRAWINGS, INFORMATION AND SUBJECT MATTER HEREOF ARE THE CONFIDENTIAL, SOLE AND EXCLUSIVE PROPERTY OF CONTROLLED POWER, INC., AND ARE NOT TO BE COPIED, REPRODUCED OR USED IN ANY MANNER FOR ANY PURPOSE WHATSOEVER WITHOUT WRITTEN CONSENT OR DIRECTION.

ALASKA ENERGY AUTHORITY
RURAL ENERGY GROUP
813 W. NORTHERN LIGHTS BLVD.
ANCHORAGE, ALASKA 99503
HTTP://WWW.AIDEA.ORG

Plot date: 2013/3/14 – 8:19

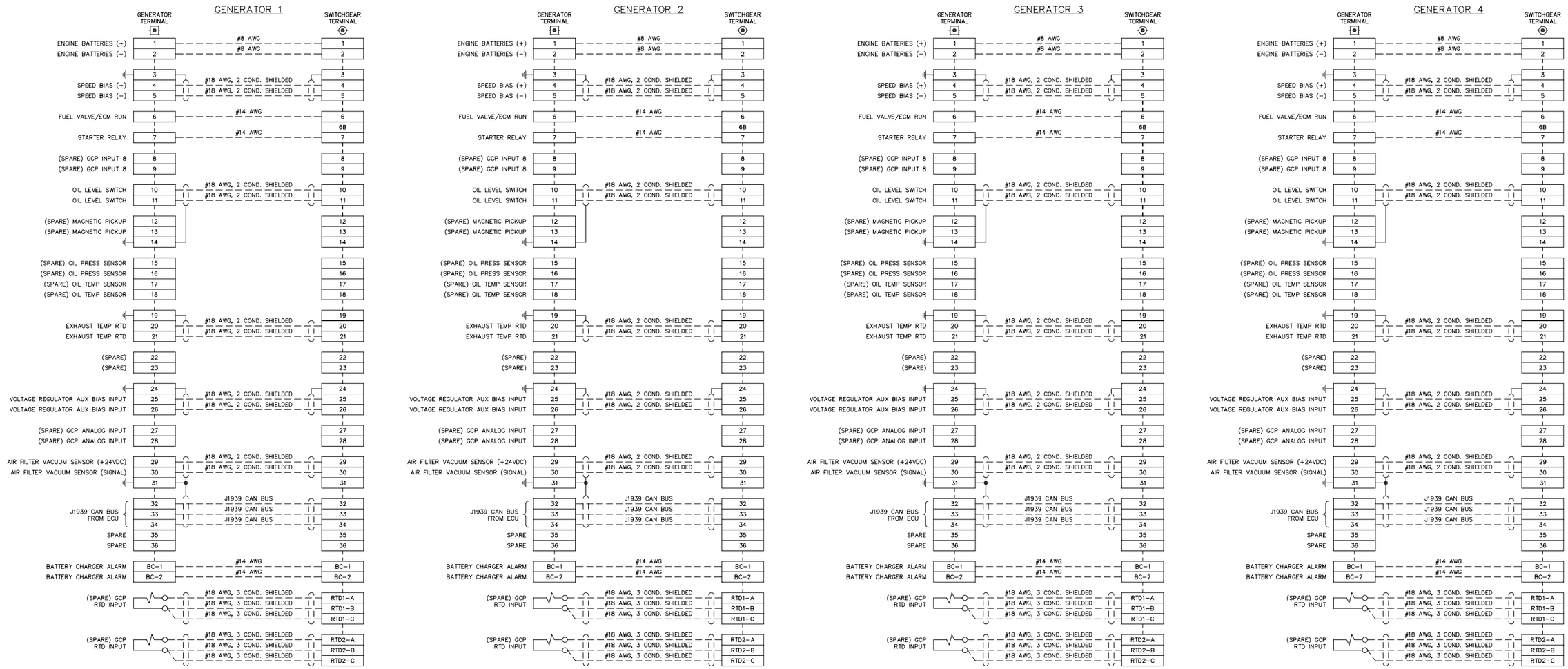

NOTE:

1. FOR GENERAL WIRING & CONSTRUCTION NOTES, SEE DRAWING No. 7455−3101−D.

REV.	DATE	DESCRIPTION	BY
B	03−14−13	SHOP AS BUILT	GPN
A	04−10−12	REVISED PER ENGINEERING REVIEW	GPN

AEA PURCHASE ORDER No. REG−12−058 CONTROLLED POWER JOB No. 7455

TITLE: INTERCONNECTION DIAGRAM

SCALE: NONE | DATE: 03−12−12 | DWN. BY: GPN

DWG. No: 7455−7102−D | SHEET: 1 OF 1 | CKD. BY: JMD

JOB: AKIAK GENERATOR SWITCHGEAR

NOTICE
THE DRAWINGS, INFORMATION AND SUBJECT MATTER HEREOF ARE THE CONFIDENTIAL, SOLE AND EXCLUSIVE PROPERTY OF CONTROLLED POWER, INC., AND ARE NOT TO BE COPIED, REPRODUCED OR USED IN ANY MANNER FOR ANY PURPOSE WHATSOEVER WITHOUT WRITTEN CONSENT OR DIRECTION.

ALASKA ENERGY AUTHORITY
RURAL ENERGY GROUP
813 W. NORTHERN LIGHTS BLVD.
ANCHORAGE, ALASKA 99503
HTTP://WWW.AIDEA.ORG

Plot date: 2013/3/14 − 8:38

BY: Trina Hartman

ITEM	QTY.	DESCRIPTION	MANUFACTURER	PART #
1	1	ENCLOSURE – TYPE 4, HINGED COVER, 16"x20"x6"	HOFFMAN ENGINEERING	A16H20ALP
2	2	TERMINAL	IDEC	BNH50W
3	47	TERMINAL	IDEC	BNH15LW
4	1	END PLATE	IDEC	BNE50W
5	2	END PLATE	IDEC	BNE15W
6	6	END STOP	IDEC	BNL-5
7	–	DUST COVER	IDEC	BNC320
8	–	DIN RAIL	ALLEN BRADLEY	199-DR1
9	1	CAT DIGITAL VOLTAGE REGULATOR (CDVR)	CAT	314-7755
10	1	CDVR HARNESS	CAT	254-1265
11	1	POWER VIEW	MURPHY	PV-101A
12	1	POWER VIEW HARNESS	MURPHY	PVW-PW-30
13	1	CONNECTOR, 9-PIN DIAGNOSTICS CAN-BUS	DEUTSCH	HD10-9-96-S-1939
14	1	CT SHORTING BLOCK	–	–
15	1	CONNECTOR STRAIN RELIEF	DEUTSCH	HD18-009
16	1	CONNECTOR PROTECTIVE DUST CAP	DEUTSCH	HDC16-9
17	1	CONNECTOR GASKET	DEUTSCH	HD10-9-GKT
18	1	CONNECTOR LANYARD	DEUTSCH	JDL082397

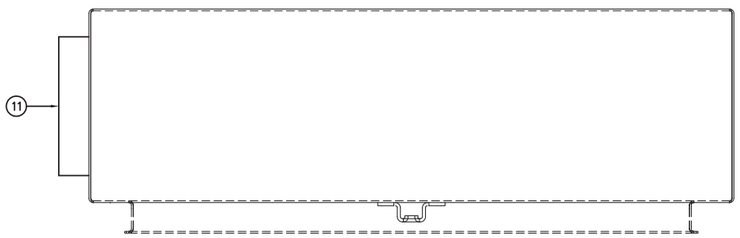

TOP VIEW

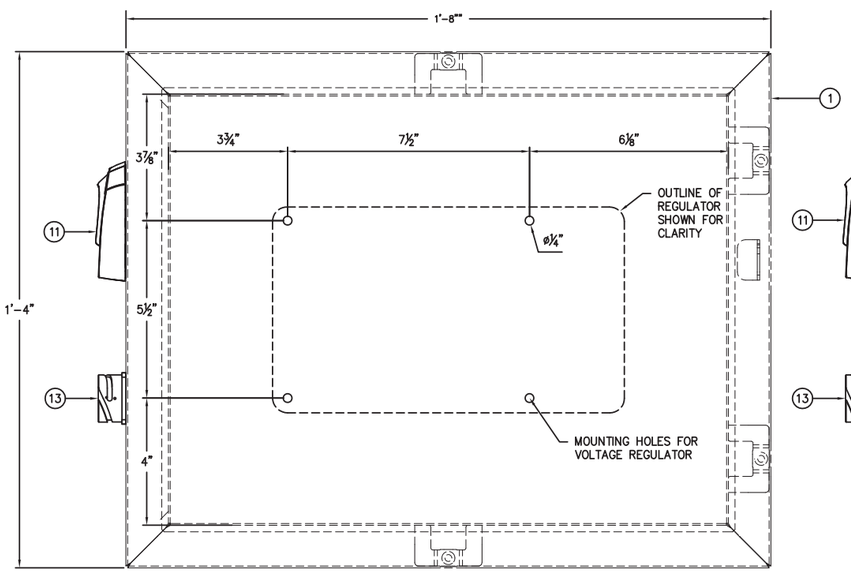

FRONT ELEVATION

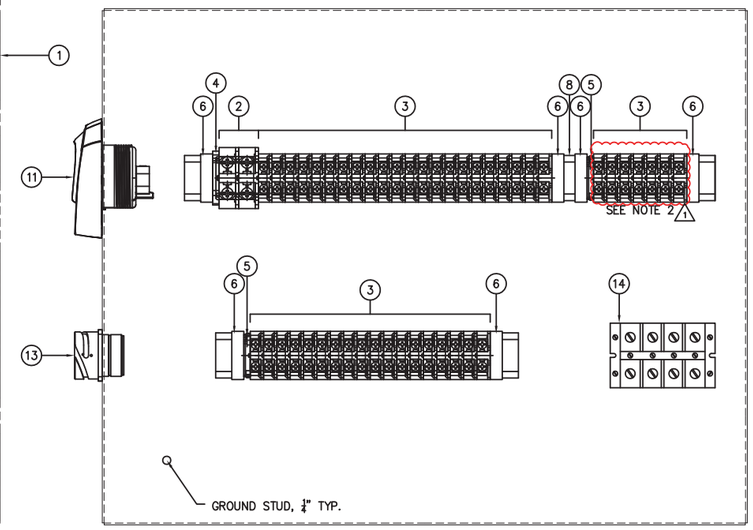

INTERIOR ELEVATION

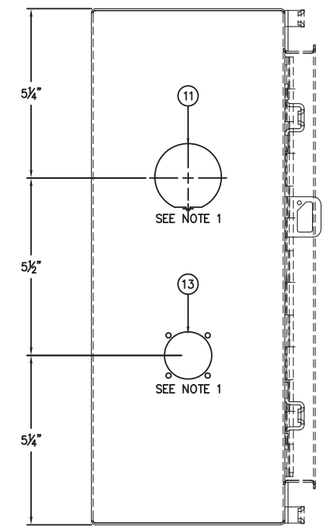

SIDE ELEVATION

NOTES:

1. VERIFY DIMENSIONS FOR KNOCKOUTS PER MANUFACTURERS SPECIFICATIONS.
2. TERMINALS USED FOR AC VOLTAGE SENSING – INSTALL DUST COVER P/N: BNC320.
3. ENCLOSURE NAMEPLATE TO BE BLACK W/ WHITE CORE GRAVOPLY WITH 45° BEVELED EDGES.
4. ALL INTERNAL DEVICES SHALL BE LABELED USING ENGRAVED WHITE W/ BLACK CORE GRAVOPLY NAMEPLATES SIZED AT 1/4"H X 3/4"W MINIMUM.
5. ALL WIRE SHALL BE LABELED AT EACH END USING HEAT SHRINKABLE TUBE TYPE LABELS.
6. THIS CONTROL PANEL IS INTENDED FOR USE IN AN NON-HAZARDOUS OR ELECTRICALLY UNCLASSIFIED AREA PER THE 2008 NEC.

Approved 1/24/12

REFERENCE DRAWINGS	NO.	DATE	REVISION	BY	CHK	APPD	NO.	DATE	REVISION	BY	CHK	APPD
	0	01/12	ISSUED FOR APPROVAL	TMH	BH							
	1	01/12	RE-ISSUED FOR APPROVAL	TMH	BH							

ENGINEERING RECORD		DATE
DRN:	TMH	01/12
DSGN:	BH	01/12
CHK:	BH	01/12
APP:		
APP:		
SCALE:	NONE	

MARSHCREEK ENERGY SYSTEMS
A DIVISION OF MARSH CREEK, LLC
2550 E. 68th Avenue, Anchorage, Alaska 99507
Phone (907) 258-0100 Fax (907) 278-6710

THE DRAWINGS, INFORMATION AND SUBJECT MATTER ARE THE CONFIDENTIAL SOLE AND EXCLUSIVE PROPERTY OF MARSH CREEK LLC AND ARE NOT TO BE COPIED REPRODUCED OR USED IN ANY MANNER FOR ANY PURPOSE WHATEVER WITHOUT WRITTEN CONSENT OR DIRECTION

TITLE OF DRAWING:
AEA
VOLTAGE REGULATOR & ENGINE CONTROL TERMINATION PANEL LAYOUT

WORK ORDER	DRAWING NUMBER	REV	SHEET
AE-0532-1112	ID-AEA-0001	1	001
MODULE CODE :			OF 001

PLOTTED ON: 1/23/2012 3:58 PM

BY: Trina Hartman

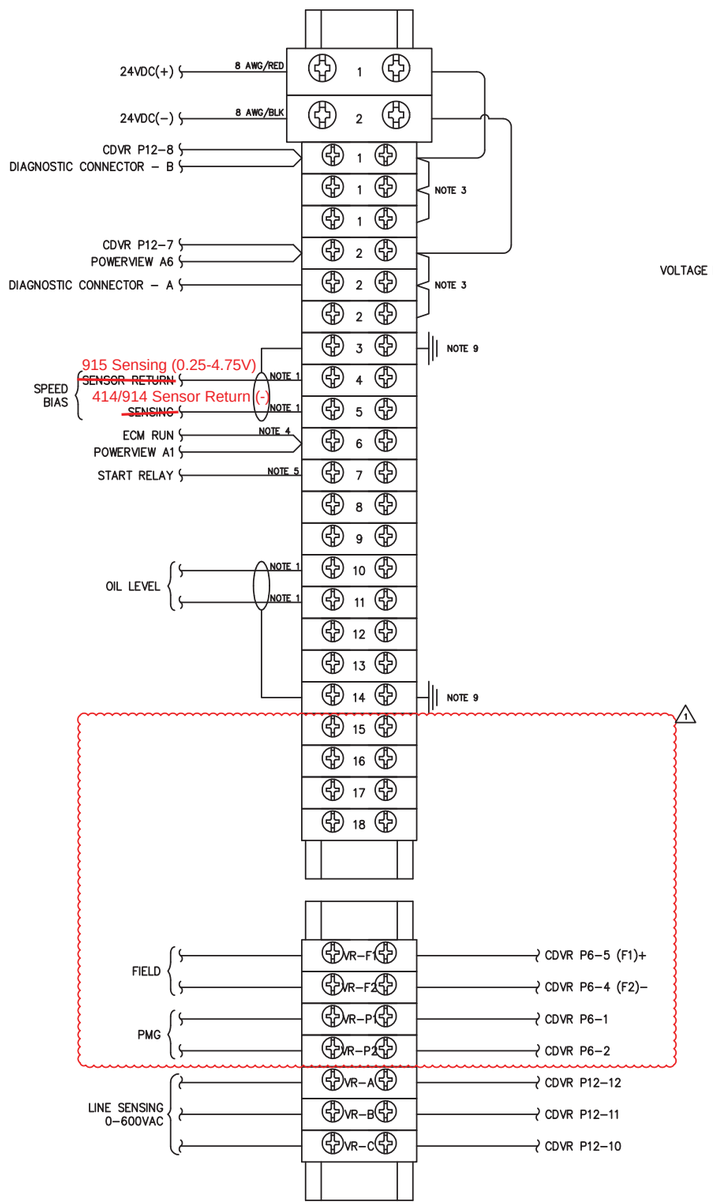

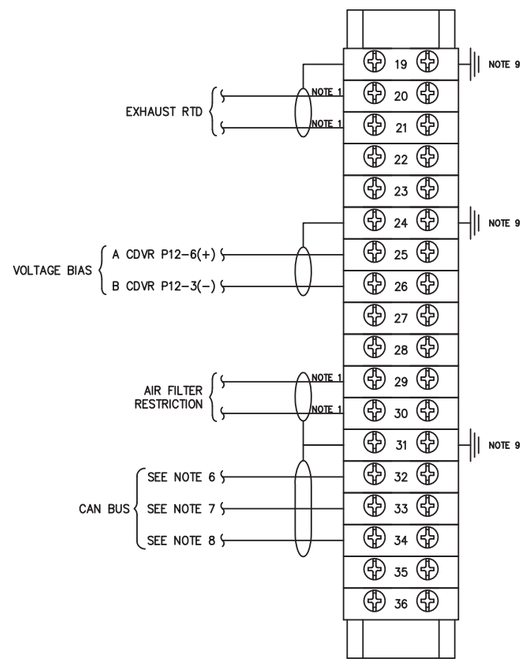

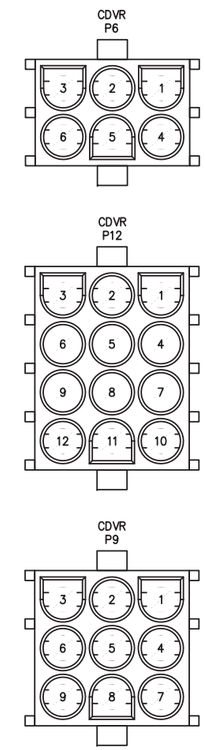

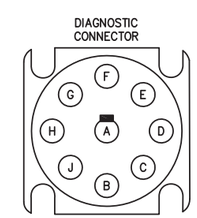

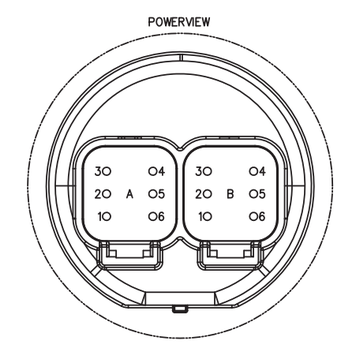

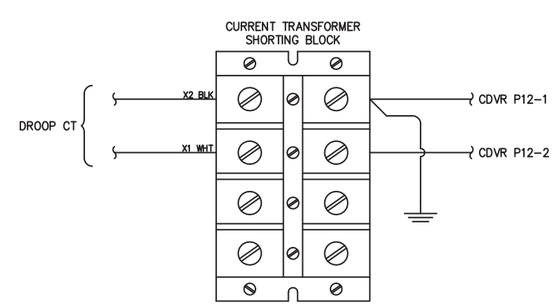

NOTES:

1) 18AWG SHIELDED/TWISTED PAIR, BELDEN #9840 OR EQUIV.
2) 22−24AWG SHIELDED/TRIAD, BELDEN #8618 OR EQUIV. (RAYCHEM J1939−11)
3) JUMPERS ARE #14, COLORS TO MATCH AEA SPECIFICATIONS
4) 14AWG, YELLOW WITH BLACK TRACER
5) 14AWG, ORANGE
6) TERMINAL 32
   - ENGINE CAN HIGH − JD#904 YELLOW
   - CDVR P9−1
   - DIAGNOSTIC CONNECTOR C
   - POWERVIEW A2
7) TERMINAL 33
   - ENGINE CAN LOW − JD#905 DARK GREEN
   - CDVR P9−2
   - DIAGNOSTIC CONNECTOR D
   - POWERVEW A3
8) TERMINAL 34
   - ENGINE CAN SHIELD − JD#020 BLACK
   - CDVR P9−3
   - DIAGNOSTIC CONNECTOR E
   - POWERVIEW A4
9) TERMINATE DRAIN WIRES FOR ALL SHIELDS ON GROUND LUGS AT GENERATOR END ONLY.

Approved 1/24/12

DSGN/CNST

REFERENCE DRAWINGS	NO.	DATE	REVISION	BY	CHK	APPD	NO.	DATE	REVISION	BY	CHK	APPD
	0	01/12	ISSUED FOR APPROVAL	TMH	BH							
	1	01/12	RE-ISSUED FOR APPROVAL	TMH	BH							

ENGINEERING RECORD		DATE
DRN:	TMH	01/12
DSGN:	BH	01/12
CHK:	BH	01/12
APP:		
APP:		
SCALE:	NONE	

MARSHCREEK ENERGY SYSTEMS
A DIVISION OF MARSH CREEK, LLC
3910 E. 88th Avenue, Anchorage, Alaska 99507
Phone (907) 344-6330 Fax (907) 344-6710

THE DRAWINGS, INFORMATION AND SUBJECT MATTER ARE THE CONFIDENTIAL SOLE AND EXCLUSIVE PROPERTY OF MARSH CREEK LLC AND ARE NOT TO BE COPIED REPRODUCED OR USED IN ANY MANNER FOR ANY PURPOSE WHATEVER WITHOUT WRITTEN CONSENT OR DIRECTION

TITLE OF DRAWING:
AEA
VOLTAGE REGULATOR & ENGINE CONTROL TERMINATION WIRING DIAGRAM

WORK ORDER	DRAWING NUMBER	REV	SHEET
AE−0532−1112	IC−AEA−0001	1	001
MODULE CODE :			OF 001

PLOTTED ON: 1/23/2012 4:29 PM

ALASKA ENERGY AUTHORITY
RURAL ENERGY GROUP
813 W. NORTHERN LIGHTS BLVD.
ANCHORAGE, ALASKA 99503
HTTP://WWW.AIDEA.ORG

ST GEORGE POWERHOUSE GENERATOR SWITCHGEAR
ALASKA ENERGY AUTHORITY PURCHASE ORDER No. 007750
CONTROLLED POWER, INC. JOB No. 7760

DRAWING No.	DRAWING TITLE
7760-2101-D	COVER SHEET
7760-3101-D	SCHEMATIC LEGEND AND NOTES
7760-4101-D	GENERATOR SWITCHGEAR ELEVATION VIEW, OUTLINE DIAGRAM
7760-4102-D	ELECTRIC BOILER SCR PANEL ELEVATION VIEW, OUTLINE DIAGRAM
7760-5101-D	SINGLE LINE, SCHEMATIC DIAGRAM
7760-5201-D	GENERATOR 1 AC THREE LINE, SCHEMATIC DIAGRAM
7760-5202-D	GENERATOR 2 AC THREE LINE, SCHEMATIC DIAGRAM
7760-5203-D	GENERATOR 3 AC THREE LINE, SCHEMATIC DIAGRAM
7760-5204-D	GENERATOR 4 AC THREE LINE, SCHEMATIC DIAGRAM
7760-5205-D	MASTER AC THREE LINE, SCHEMATIC DIAGRAM
7760-5206-D	MASTER AC THREE LINE, SCHEMATIC DIAGRAM
7760-5207-D	VFD AC THREE LINE, SCHEMATIC DIAGRAM
7760-5208-D	ELECTRIC BOILER AC THREE LINE, SCHEMATIC DIAGRAM
7760-5301-D	GENERATOR 1 DC CONTROL, SCHEMATIC DIAGRAM
7760-5302-D	GENERATOR 1 DC CONTROL, SCHEMATIC DIAGRAM
7760-5303-D	GENERATOR 1 DC CONTROL, SCHEMATIC DIAGRAM
7760-5304-D	GENERATOR 2 DC CONTROL, SCHEMATIC DIAGRAM
7760-5305-D	GENERATOR 2 DC CONTROL, SCHEMATIC DIAGRAM
7760-5306-D	GENERATOR 2 DC CONTROL, SCHEMATIC DIAGRAM
7760-5307-D	GENERATOR 3 DC CONTROL, SCHEMATIC DIAGRAM
7760-5308-D	GENERATOR 3 DC CONTROL, SCHEMATIC DIAGRAM
7760-5309-D	GENERATOR 3 DC CONTROL, SCHEMATIC DIAGRAM
7760-5310-D	GENERATOR 4 DC CONTROL, SCHEMATIC DIAGRAM
7760-5311-D	GENERATOR 4 DC CONTROL, SCHEMATIC DIAGRAM
7760-5312-D	GENERATOR 4 DC CONTROL, SCHEMATIC DIAGRAM
7760-5313-D	MASTER DC CONTROL, SCHEMATIC DIAGRAM
7760-5314-D	MASTER DC CONTROL, SCHEMATIC DIAGRAM
7760-5315-D	MASTER DC CONTROL, SCHEMATIC DIAGRAM
7760-5316-D	MASTER DC CONTROL, SCHEMATIC DIAGRAM
7760-5317-D	FEEDER 1 DC CONTROL, SCHEMATIC DIAGRAM
7760-5318-D	FEEDER 2 DC CONTROL, SCHEMATIC DIAGRAM
7760-5319-D	VFD DC CONTROL, SCHEMATIC DIAGRAM
7760-5320-D	VFD DC CONTROL, SCHEMATIC DIAGRAM
7760-5321-D	ELECTRIC BOILER SCR PANEL CONTROL, SCHEMATIC DIAGRAM
7760-5401-D	FEEDER BREAKER CONTROL, SCHEMATIC DIAGRAM
7760-5501-D	PLC COMMUNICATION, SCHEMATIC DIAGRAM
7760-5502-D	PLC COMMUNICATION, SCHEMATIC DIAGRAM
7760-5601-D	COMMUNICATION NETWORK DIAGRAM
7760-5602-D	COMMUNICATION NETWORK DIAGRAM
7760-5701-D	AC SERVICE, HEATER, LIGHTING & FAN CONTROL, SCHEMATIC DIAGRAM
7760-5702-D	AC CONTROL POWER, SCHEMATIC DIAGRAM
7760-6101-D	CONTROL SWITCH TARGET DIAGRAM
7760-6201-D	NAMEPLATE ENGRAVING SCHEDULE, FABRICATION DIAGRAM
7760-6202-D	ANNUNCIATOR WINDOWS, FABRICATION DIAGRAM
7760-7101-D	INTERCONNECTION DIAGRAM
7760-7102-D	INTERCONNECTION DIAGRAM

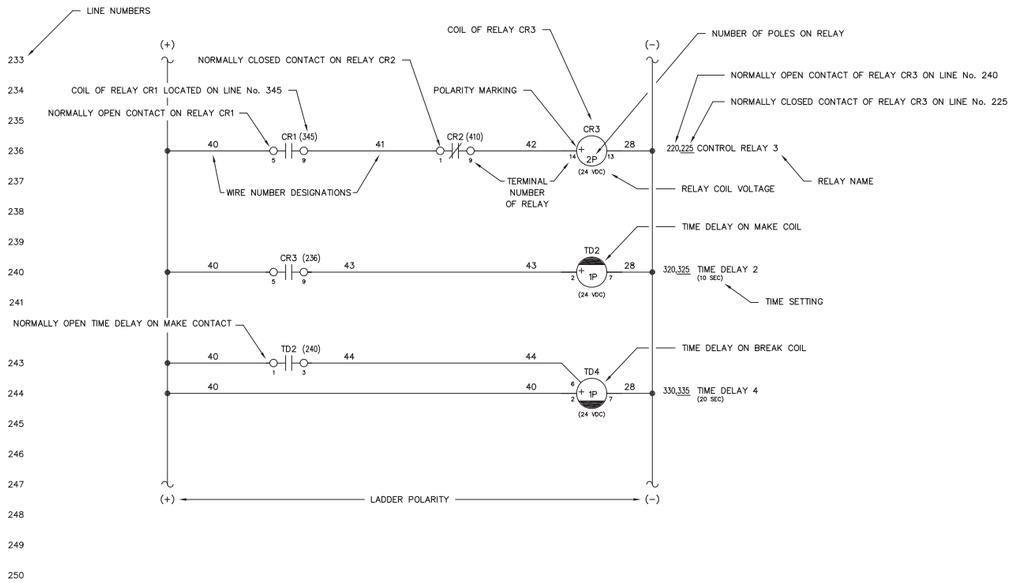

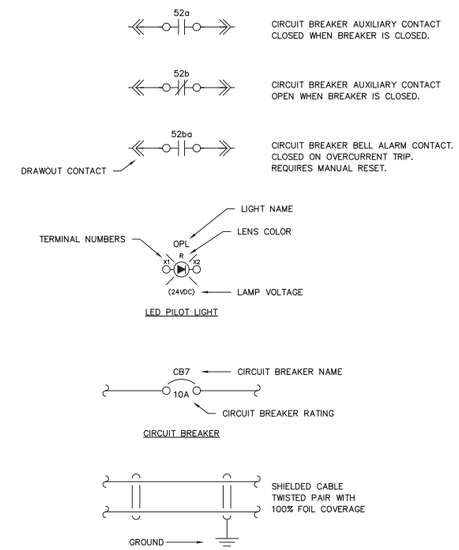

NOTES:

1. SCHEMATIC IS SHOWN AS FOLLOWS:
   - ALL AC AND DC POWER REMOVED
   - ALL RELAY CONTACTS DE-ENERGIZED
   - ALL CIRCUIT BREAKERS IN THE OPEN/RESET POSITION
   - ALL MODE SWITCHES IN THE "OFF" POSITION
   - ALL EMERGENCY STOP SWITCHES IN THE "NORMAL" POSITION
   - ALL PRESSURE SWITCHES SHOWN WITHOUT PRESSURE PRESENT
   - ALL LEVEL SWITCHES SHOWN WITHOUT FLUID PRESENT
   - ALL TEMPERATURE SWITCHES SHOWN AT AMBIENT
2. INDICATES FIELD TERMINALS IN GENERATOR CONTROL SECTION.
3. INDICATES TERMINALS AT ENGINE/GENERATOR.
4. INDICATES INTERCONNECT TERMINALS IN MASTER SECTION.
5. INDICATES FIELD TERMINALS IN MASTER SECTION.
6. INDICATES INTERCONNECT TERMINALS IN GENERATOR CONTROL SECTION.
7. INDICATES INTERCONNECT TERMINALS IN VFD/DIST SECTION.
8. INDICATES FIELD TERMINALS IN VFD/DIST SECTION.
9. INDICATES FIELD TERMINALS IN ELECTRIC BOILER SCR PANEL.
10. – INDICATES FIELD WIRING BY OTHERS
    ALL CONTROL WIRING TO BE No. 14 AWG, 600 VOLT, TYPE SIS EXCEPT AS NOTED
11. SHIELDED WIRING TO BE No. 18 AWG, 300 VOLT, TWISTED LINE WITH 100% FOIL COVERAGE
12. ALL DIODES ARE 1N4007 EXCEPT AS NOTED

REV.	DATE	DESCRIPTION	BY
C	05-15-13	SHOP AS BUILT	GPN
B	04-03-13	REVISED PER REVIEW	GPN
A	03-25-13	SUBMITTAL	GPN

AEA PURCHASE ORDER No. 007750 CONTROLLED POWER JOB No. 7760

TITLE: SCHEMATIC LEGEND & NOTES

SCALE: NONE | DATE: 03-19-13 | DWN. BY: GPN

DWG. No: 7760-3101-D | SHEET: 1 OF 1 | CKD. BY: JMD

JOB: ST GEORGE POWERHOUSE GENERATOR SWITCHGEAR

NOTICE
THE DRAWINGS, INFORMATION AND SUBJECT MATTER HEREOF ARE THE CONFIDENTIAL, SOLE AND EXCLUSIVE PROPERTY OF CONTROLLED POWER, INC., AND ARE NOT TO BE COPIED, REPRODUCED OR USED IN ANY MANNER FOR ANY PURPOSE WHATSOEVER WITHOUT WRITTEN CONSENT OR DIRECTION.

ALASKA ENERGY AUTHORITY
RURAL ENERGY GROUP
813 W. NORTHERN LIGHTS BLVD.
ANCHORAGE, ALASKA 99503
HTTP://WWW.AIDEA.ORG

Plot date: 2013/9/16 – 12:53

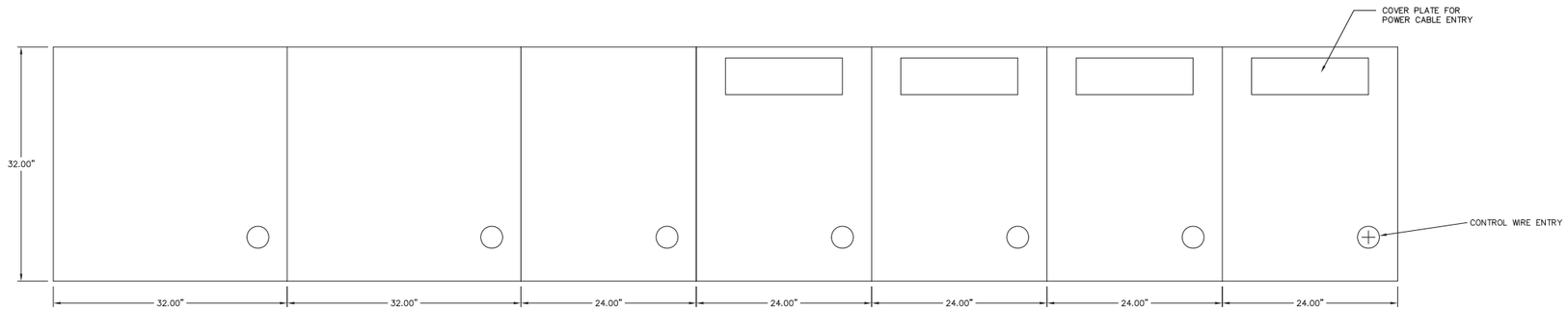

TOP VIEW

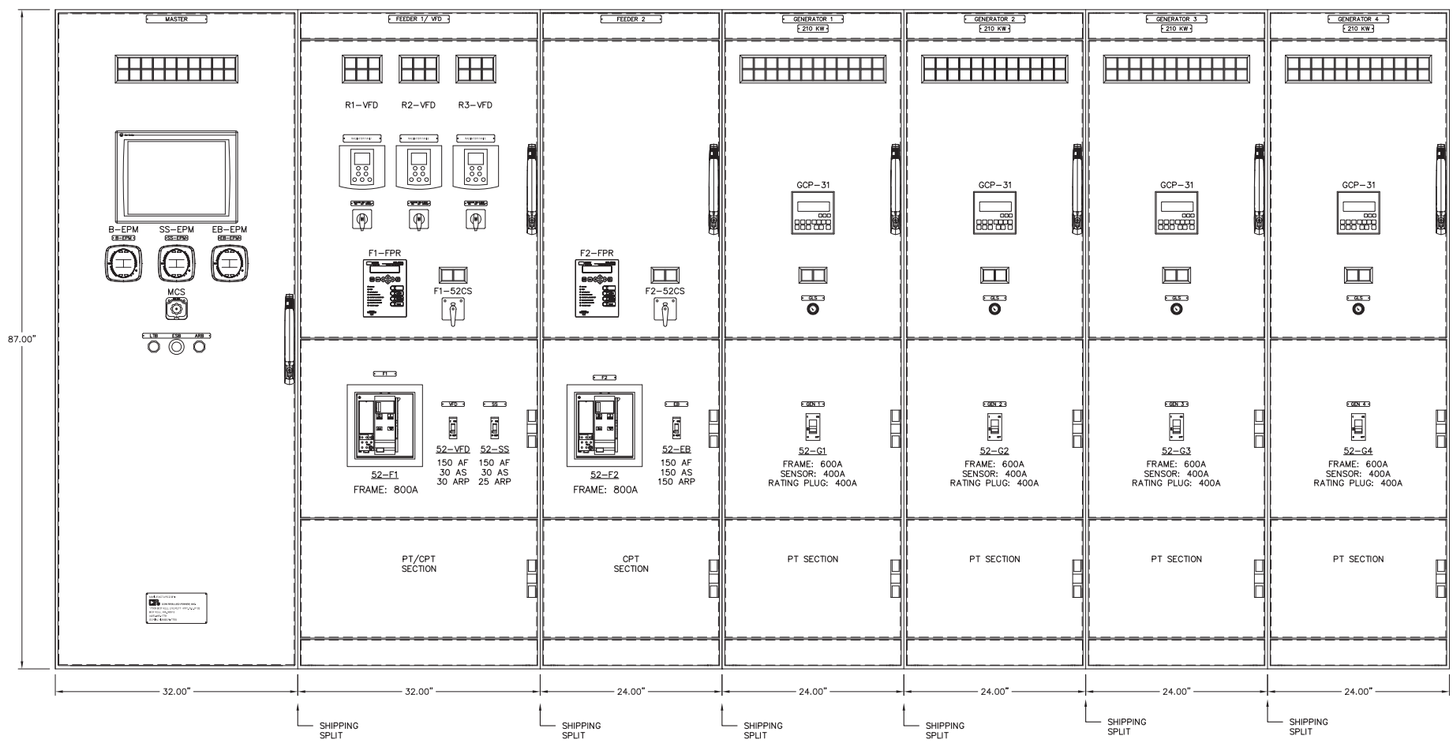

GENERATOR SWITCHGEAR ELEVATION VIEW

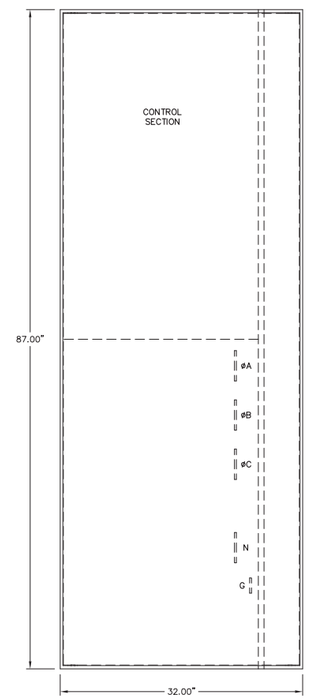

SIDE VIEW

REV.	DATE	DESCRIPTION	BY
C	05-15-13	SHOP AS BUILT	GPN
B	04-03-13	REVISED PER REVIEW	GPN
A	03-25-13	SUBMITTAL	GPN

AEA PURCHASE ORDER No. 007750 — CONTROLLED POWER JOB No. 7760

TITLE: GENERATOR SWITCHGEAR ELEVATION VIEW, OUTLINE DIAGRAM

SCALE: 1/10	DATE: 03-19-13	DWN. BY: GPN
DWG. No: 7760-4101-D	SHEET: 1 OF 1	CKD. BY: JMD

JOB: ST GEORGE POWERHOUSE GENERATOR SWITCHGEAR

NOTICE
THE DRAWINGS, INFORMATION AND SUBJECT MATTER HEREOF ARE THE CONFIDENTIAL, SOLE AND EXCLUSIVE PROPERTY OF CONTROLLED POWER, INC., AND ARE NOT TO BE COPIED, REPRODUCED OR USED IN ANY MANNER FOR ANY PURPOSE WHATSOEVER WITHOUT WRITTEN CONSENT OR DIRECTION.

ALASKA ENERGY AUTHORITY
RURAL ENERGY GROUP
813 W. NORTHERN LIGHTS BLVD.
ANCHORAGE, ALASKA 99503
HTTP://WWW.AIDEA.ORG

Plot date: 2013/9/16 – 12:52

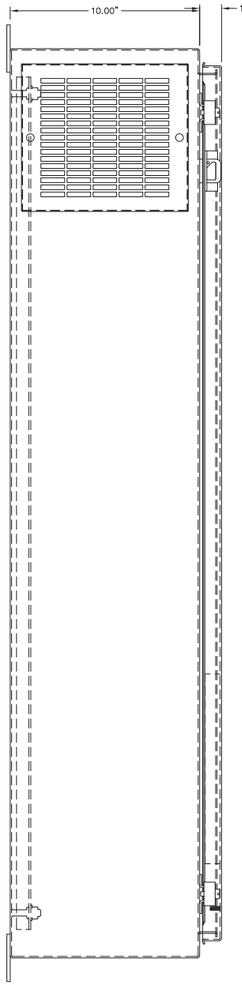

LEFT SIDE VIEW

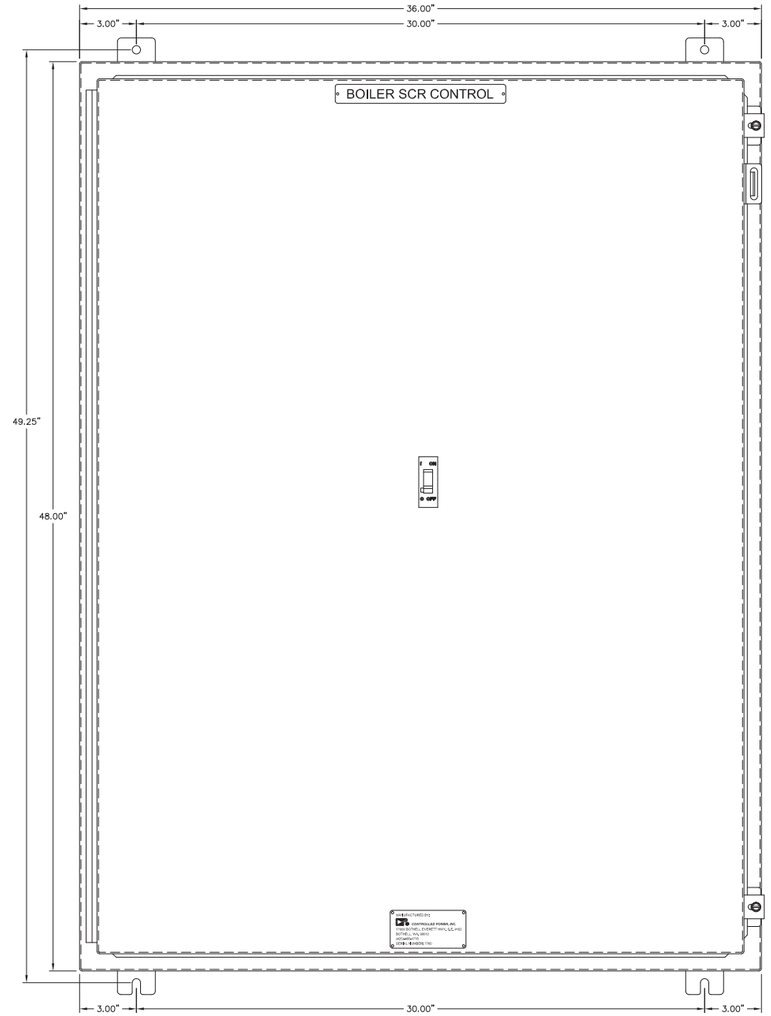

SCR PANEL – TYPICAL FRONT VIEW

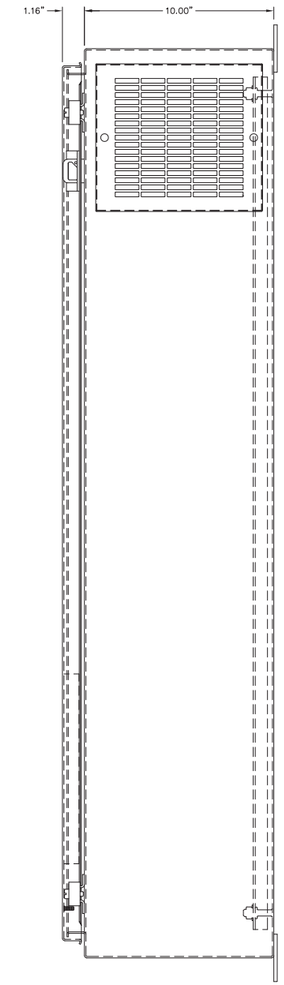

RIGHT SIDE VIEW

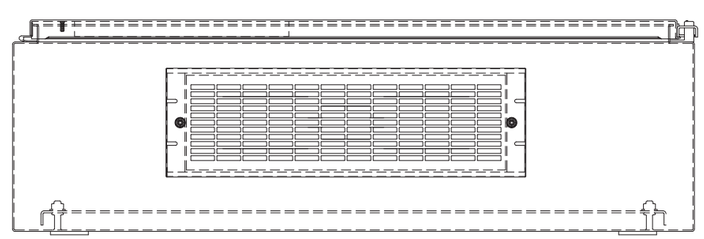

TYPICAL BOTTOM VIEW

REV.	DATE	DESCRIPTION	BY
C	05–15–13	SHOP AS BUILT	GPN
B	04–03–13	REVISED PER REVIEW	GPN
A	03–25–13	SUBMITTAL	GPN

AEA PURCHASE ORDER No. 007750 CONTROLLED POWER JOB No. 7760

TITLE: ELECTRIC BOILER SCR PANEL ELEVATION VIEW, OUTLINE DIAGRAM

SCALE: 1/4	DATE: 03–19–13	DWN. BY: GPN
DWG. No: 7760–4102–D	SHEET: 1 OF 1	CKD. BY: JMD

JOB: ST GEORGE POWERHOUSE GENERATOR SWITCHGEAR

NOTICE
THE DRAWINGS, INFORMATION AND SUBJECT MATTER HEREOF ARE THE CONFIDENTIAL, SOLE AND EXCLUSIVE PROPERTY OF CONTROLLED POWER, INC., AND ARE NOT TO BE COPIED, REPRODUCED OR USED IN ANY MANNER FOR ANY PURPOSE WHATSOEVER WITHOUT WRITTEN CONSENT OR DIRECTION.

ALASKA ENERGY AUTHORITY
RURAL ENERGY GROUP
813 W. NORTHERN LIGHTS BLVD.
ANCHORAGE, ALASKA 99503
HTTP://WWW.AIDEA.ORG

Plot date: 2013/9/16 – 12:52

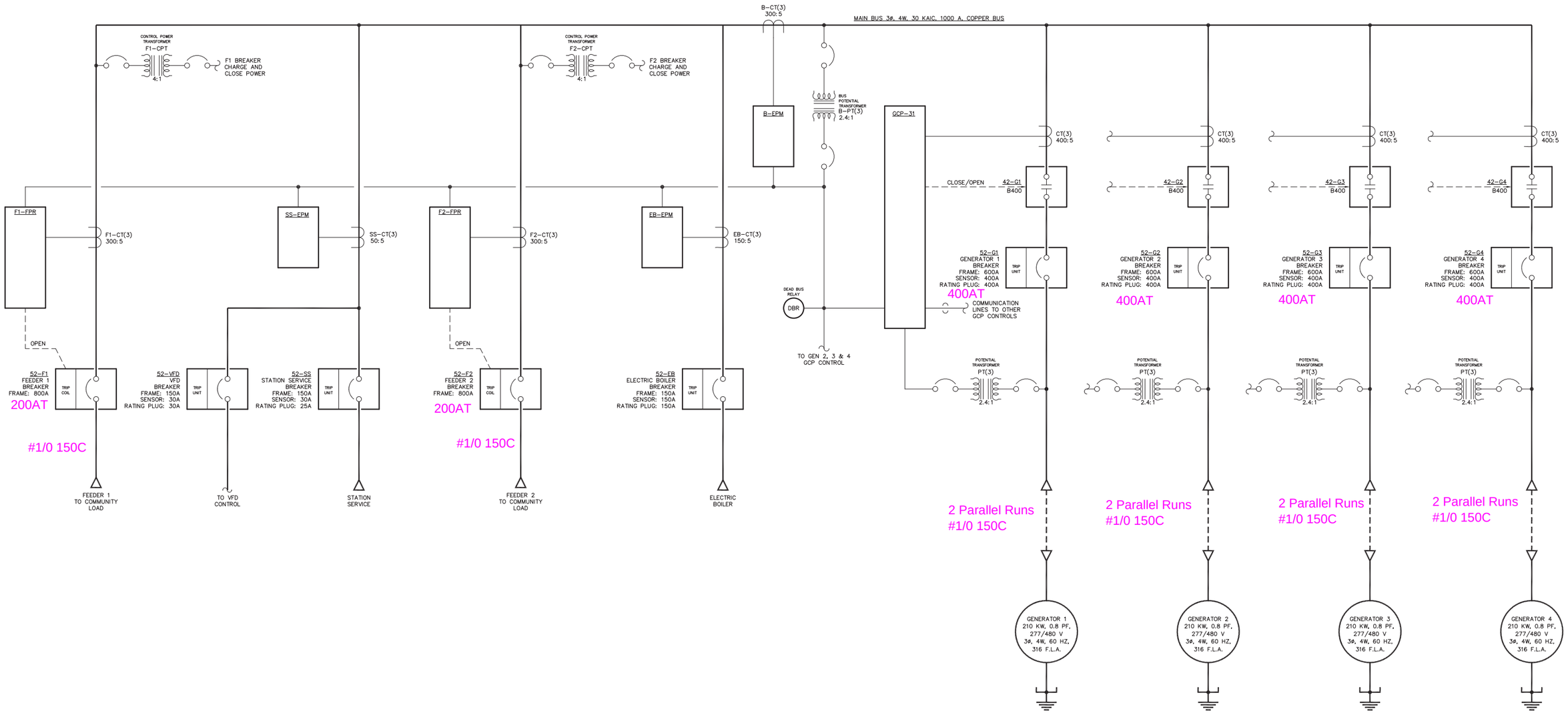

Notes:
1) Conductor sizes and temperature ratings shown based on original design and have not been confirmed. Field verify.
2) Breaker trip setpoints shown based on original commissioning and may not match present operating conditions. Field verify.

NOTES:

1. GENERATORS 2, 3 & 4 SIMILAR TO GENERATOR 1.

NOTE:

1. FOR GENERAL WIRING & CONSTRUCTION NOTES, SEE DRAWING No. 7760-3101-D.

REV.	DATE	DESCRIPTION	BY
C	05-15-13	SHOP AS BUILT	GPN
B	04-03-13	REVISED PER REVIEW	GPN
A	03-25-13	SUBMITTAL	GPN

AEA PURCHASE ORDER No. 007750 — CONTROLLED POWER JOB No. 7760

TITLE: GENERATOR SWITCHGEAR SINGLE LINE, SCHEMATIC DIAGRAM

SCALE: NONE	DATE: 03-19-13	DWN. BY: GPN
DWG. No: 7760-5101-D	SHEET: 1 OF 1	CKD. BY: JMD

JOB: ST GEORGE POWERHOUSE GENERATOR SWITCHGEAR

NOTICE
THE DRAWINGS, INFORMATION AND SUBJECT MATTER HEREOF ARE THE CONFIDENTIAL, SOLE AND EXCLUSIVE PROPERTY OF CONTROLLED POWER, INC., AND ARE NOT TO BE COPIED, REPRODUCED OR USED IN ANY MANNER FOR ANY PURPOSE WHATSOEVER WITHOUT WRITTEN CONSENT OR DIRECTION.

ALASKA ENERGY AUTHORITY
RURAL ENERGY GROUP
813 W. NORTHERN LIGHTS BLVD.
ANCHORAGE, ALASKA 99503
HTTP://WWW.AIDEA.ORG

Plot date: 2013/9/16 – 12:51

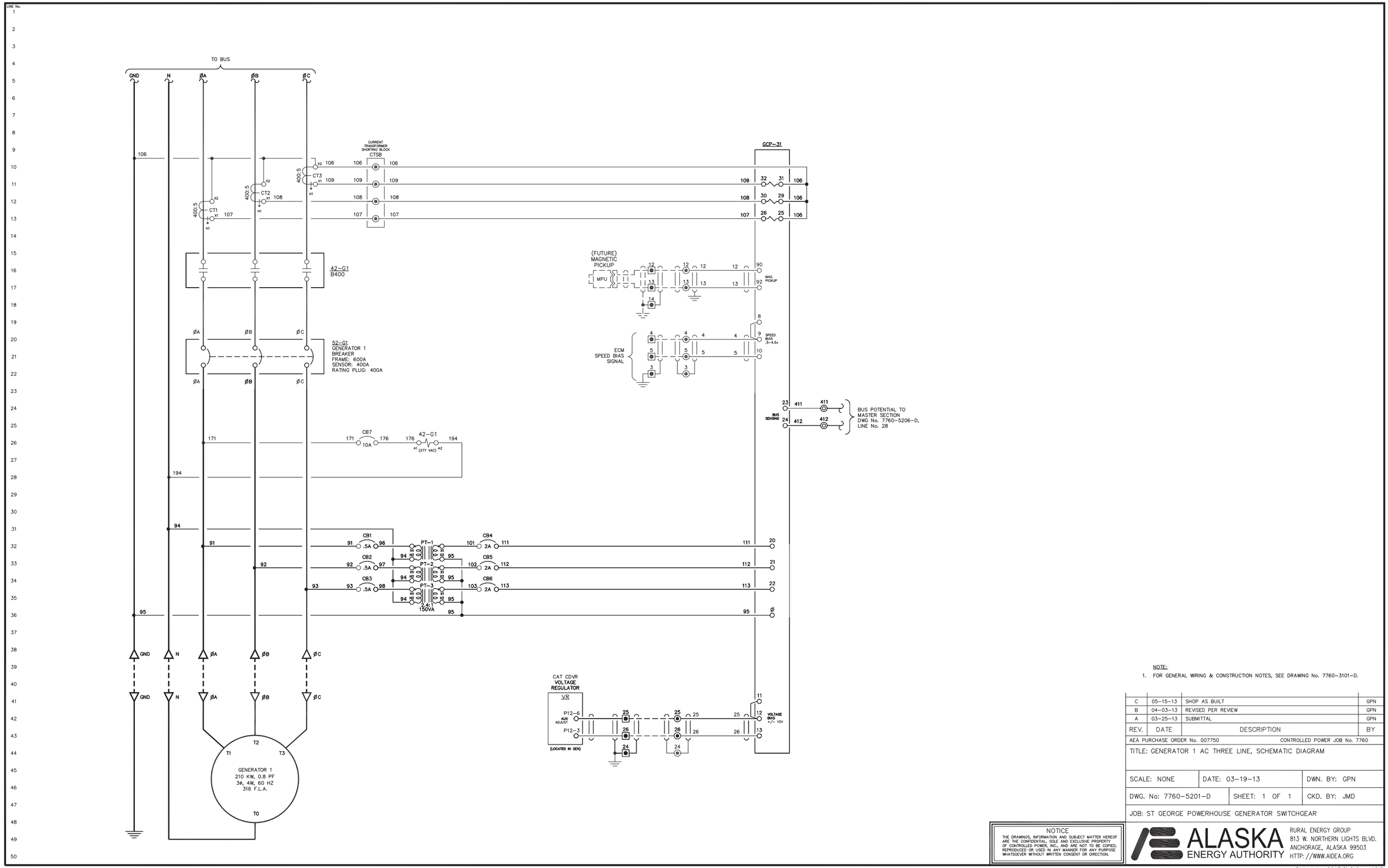

NOTE:

1. FOR GENERAL WIRING & CONSTRUCTION NOTES, SEE DRAWING No. 7760-3101-D.

REV.	DATE	DESCRIPTION	BY
C	05-15-13	SHOP AS BUILT	GPN
B	04-03-13	REVISED PER REVIEW	GPN
A	03-25-13	SUBMITTAL	GPN

AEA PURCHASE ORDER No. 007750 — CONTROLLED POWER JOB No. 7760

TITLE: GENERATOR 1 AC THREE LINE, SCHEMATIC DIAGRAM

SCALE: NONE	DATE: 03-19-13	DWN. BY: GPN
DWG. No: 7760-5201-D	SHEET: 1 OF 1	CKD. BY: JMD

JOB: ST GEORGE POWERHOUSE GENERATOR SWITCHGEAR

NOTICE
THE DRAWINGS, INFORMATION AND SUBJECT MATTER HEREOF ARE THE CONFIDENTIAL, SOLE AND EXCLUSIVE PROPERTY OF CONTROLLED POWER, INC., AND ARE NOT TO BE COPIED, REPRODUCED OR USED IN ANY MANNER FOR ANY PURPOSE WHATSOEVER WITHOUT WRITTEN CONSENT OR DIRECTION.

ALASKA ENERGY AUTHORITY
RURAL ENERGY GROUP
813 W. NORTHERN LIGHTS BLVD.
ANCHORAGE, ALASKA 99503
HTTP://WWW.AIDEA.ORG

Plot date: 2013/9/16 - 12:51

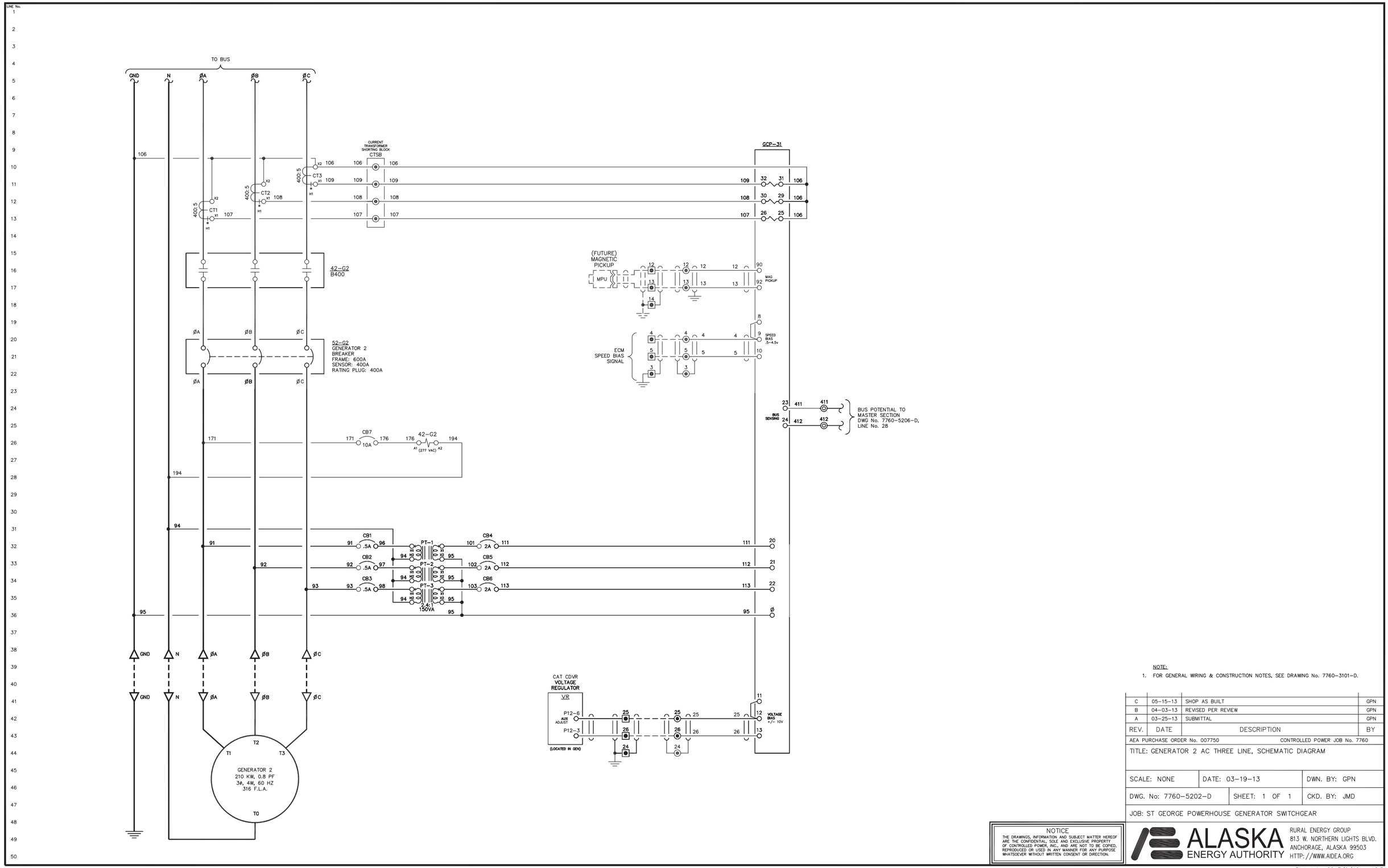

NOTE:

1. FOR GENERAL WIRING & CONSTRUCTION NOTES, SEE DRAWING No. 7760-3101-D.

REV.	DATE	DESCRIPTION	BY
C	05-15-13	SHOP AS BUILT	GPN
B	04-03-13	REVISED PER REVIEW	GPN
A	03-25-13	SUBMITTAL	GPN

AEA PURCHASE ORDER No. 007750 CONTROLLED POWER JOB No. 7760

TITLE: GENERATOR 2 AC THREE LINE, SCHEMATIC DIAGRAM

SCALE: NONE	DATE: 03-19-13	DWN. BY: GPN
DWG. No: 7760-5202-D	SHEET: 1 OF 1	CKD. BY: JMD

JOB: ST GEORGE POWERHOUSE GENERATOR SWITCHGEAR

NOTICE
THE DRAWINGS, INFORMATION AND SUBJECT MATTER HEREOF ARE THE CONFIDENTIAL, SOLE AND EXCLUSIVE PROPERTY OF CONTROLLED POWER, INC., AND ARE NOT TO BE COPIED, REPRODUCED OR USED IN ANY MANNER FOR ANY PURPOSE WHATSOEVER WITHOUT WRITTEN CONSENT OR DIRECTION.

ALASKA ENERGY AUTHORITY
RURAL ENERGY GROUP
813 W. NORTHERN LIGHTS BLVD.
ANCHORAGE, ALASKA 99503
HTTP://WWW.AIDEA.ORG

Plot date: 2013/9/16 - 12:51

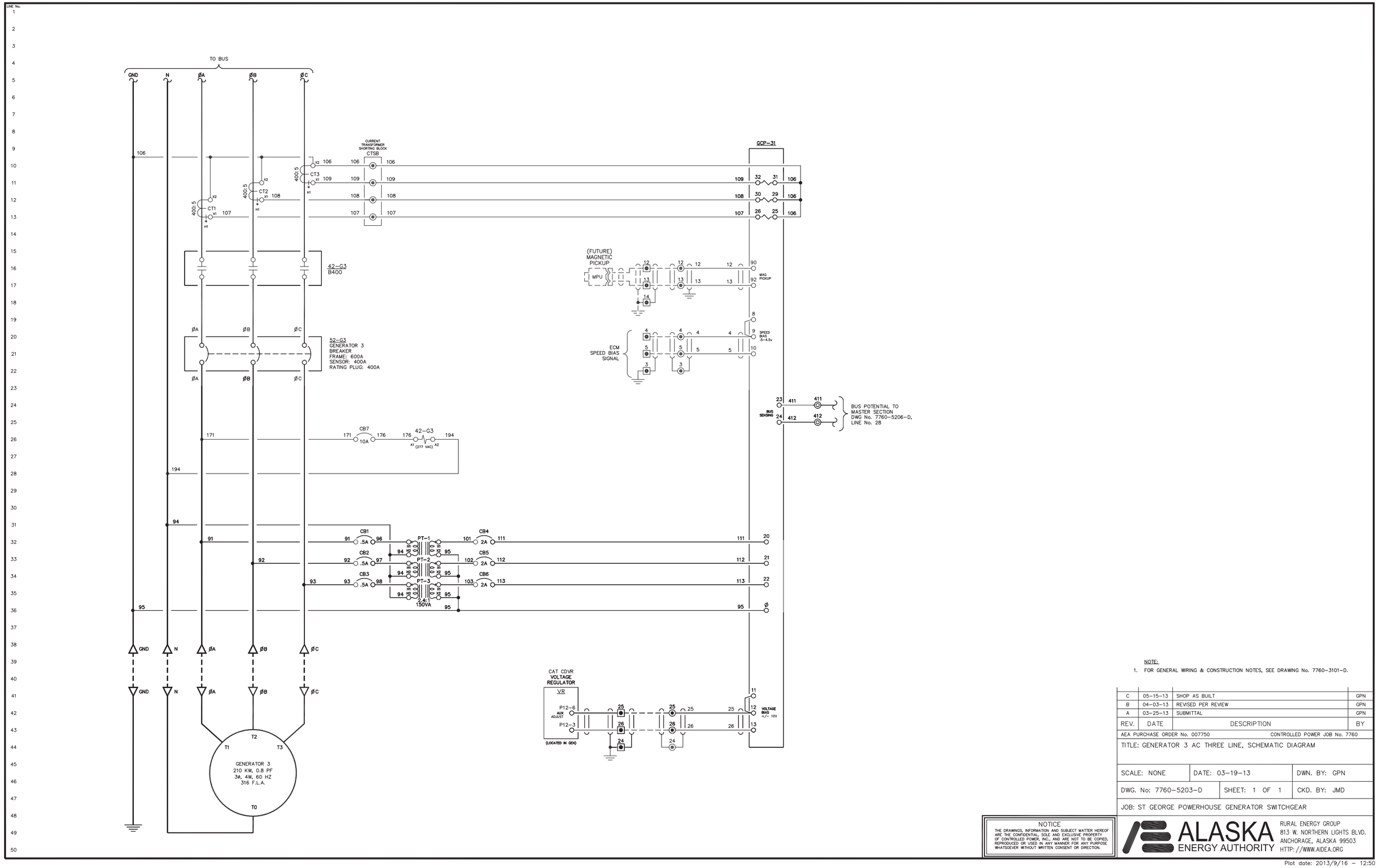

NOTE:

1. FOR GENERAL WIRING & CONSTRUCTION NOTES, SEE DRAWING No. 7760-3101-D.

REV.	DATE	DESCRIPTION	BY
C	05-15-13	SHOP AS BUILT	GPN
B	04-03-13	REVISED PER REVIEW	GPN
A	03-25-13	SUBMITTAL	GPN

AEA PURCHASE ORDER No. 007750 CONTROLLED POWER JOB No. 7760

TITLE: GENERATOR 3 AC THREE LINE, SCHEMATIC DIAGRAM

SCALE: NONE	DATE: 03-19-13	DWN. BY: GPN
DWG. No: 7760-5203-D	SHEET: 1 OF 1	CKD. BY: JMD

JOB: ST GEORGE POWERHOUSE GENERATOR SWITCHGEAR

NOTICE
THE DRAWINGS, INFORMATION AND SUBJECT MATTER HEREOF ARE THE CONFIDENTIAL, SOLE AND EXCLUSIVE PROPERTY OF CONTROLLED POWER, INC., AND ARE NOT TO BE COPIED, REPRODUCED OR USED IN ANY MANNER FOR ANY PURPOSE WHATSOEVER WITHOUT WRITTEN CONSENT OR DIRECTION.

ALASKA ENERGY AUTHORITY
RURAL ENERGY GROUP
813 W. NORTHERN LIGHTS BLVD.
ANCHORAGE, ALASKA 99503
HTTP://WWW.AIDEA.ORG

Plot date: 2013/9/16 - 12:50

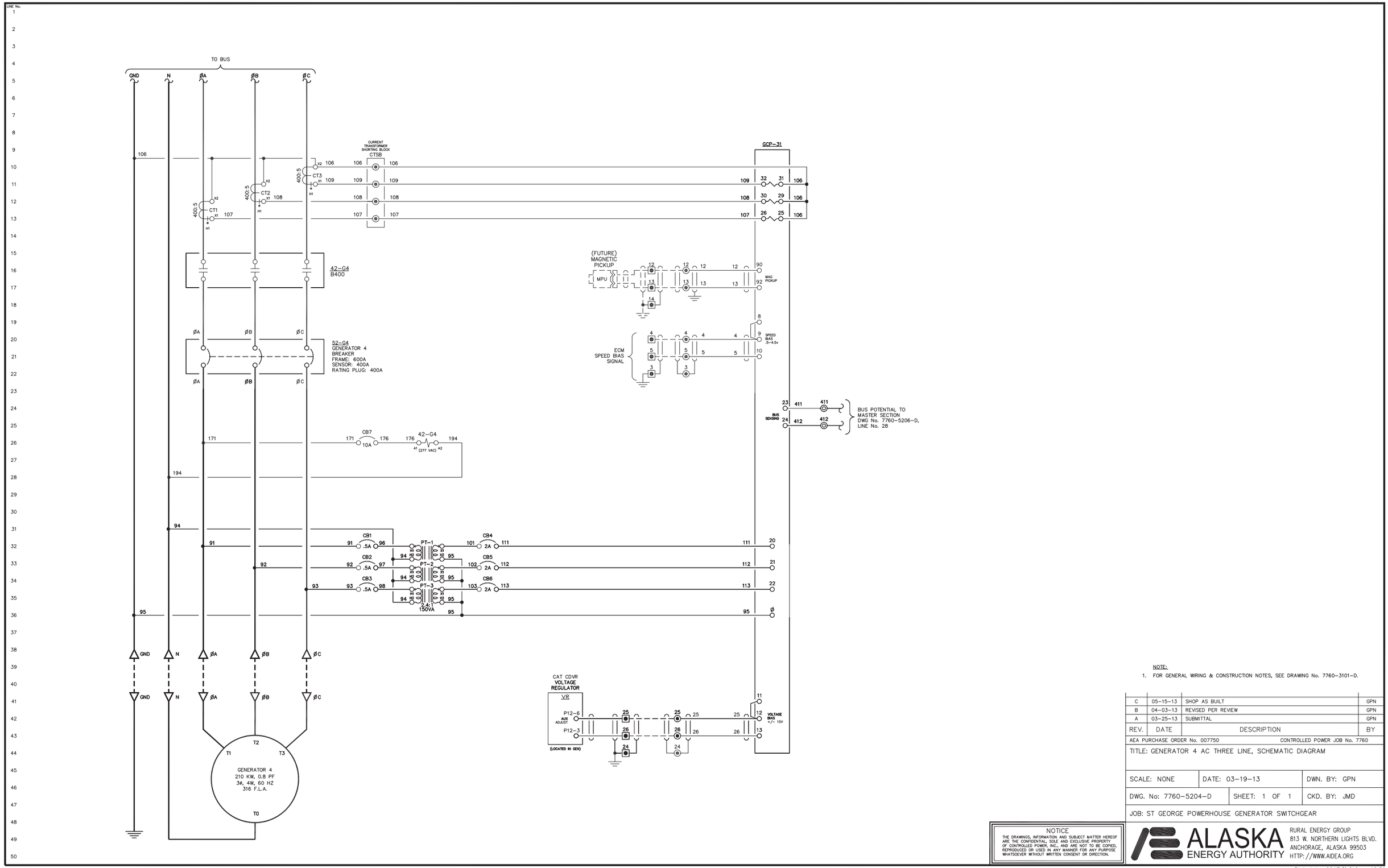

NOTE:

1. FOR GENERAL WIRING & CONSTRUCTION NOTES, SEE DRAWING No. 7760-3101-D.

REV.	DATE	DESCRIPTION	BY
C	05-15-13	SHOP AS BUILT	GPN
B	04-03-13	REVISED PER REVIEW	GPN
A	03-25-13	SUBMITTAL	GPN

AEA PURCHASE ORDER No. 007750 CONTROLLED POWER JOB No. 7760

TITLE: GENERATOR 4 AC THREE LINE, SCHEMATIC DIAGRAM

SCALE: NONE	DATE: 03-19-13	DWN. BY: GPN
DWG. No: 7760-5204-D	SHEET: 1 OF 1	CKD. BY: JMD

JOB: ST GEORGE POWERHOUSE GENERATOR SWITCHGEAR

NOTICE
THE DRAWINGS, INFORMATION AND SUBJECT MATTER HEREOF ARE THE CONFIDENTIAL, SOLE AND EXCLUSIVE PROPERTY OF CONTROLLED POWER, INC., AND ARE NOT TO BE COPIED, REPRODUCED OR USED IN ANY MANNER FOR ANY PURPOSE WHATSOEVER WITHOUT WRITTEN CONSENT OR DIRECTION.

ALASKA ENERGY AUTHORITY
RURAL ENERGY GROUP
813 W. NORTHERN LIGHTS BLVD.
ANCHORAGE, ALASKA 99503
HTTP://WWW.AIDEA.ORG

Plot date: 2013/9/16 - 12:50

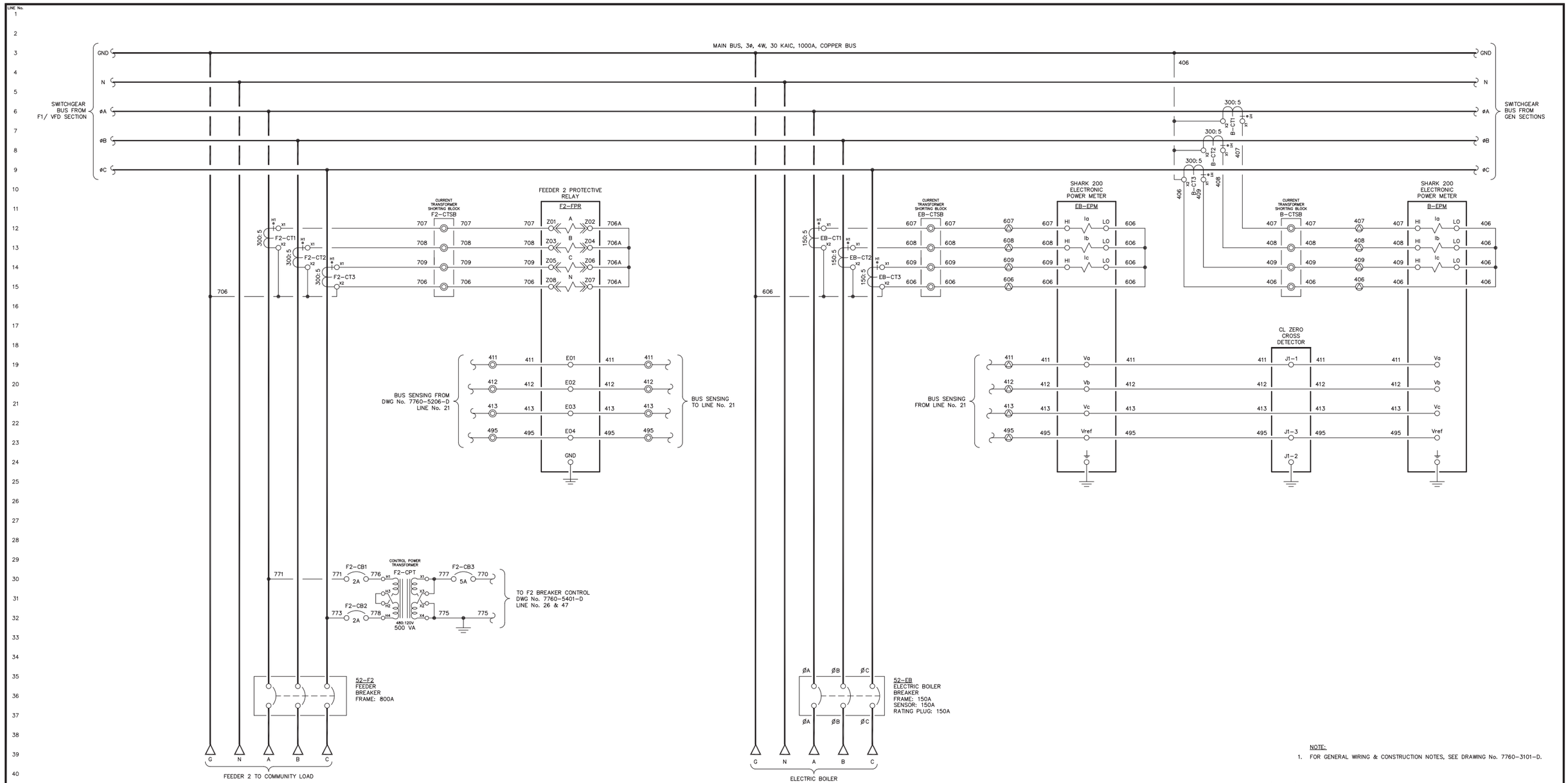

NOTE:

1. FOR GENERAL WIRING & CONSTRUCTION NOTES, SEE DRAWING No. 7760-3101-D.

REV.	DATE	DESCRIPTION	BY
C	05-15-13	SHOP AS BUILT	GPN
B	04-03-13	REVISED PER REVIEW	GPN
A	03-25-13	SUBMITTAL	GPN

AEA PURCHASE ORDER No. 007750 CONTROLLED POWER JOB No. 7760

TITLE: MASTER AC THREE LINE, SCHEMATIC DIAGRAM

SCALE: NONE	DATE: 03-19-13	DWN. BY: GPN
DWG. No: 7760-5205-D	SHEET: 1 OF 1	CKD. BY: JMD

JOB: ST GEORGE POWERHOUSE GENERATOR SWITCHGEAR

NOTICE
THE DRAWINGS, INFORMATION AND SUBJECT MATTER HEREOF ARE THE CONFIDENTIAL, SOLE AND EXCLUSIVE PROPERTY OF CONTROLLED POWER, INC., AND ARE NOT TO BE COPIED, REPRODUCED OR USED IN ANY MANNER FOR ANY PURPOSE WHATSOEVER WITHOUT WRITTEN CONSENT OR DIRECTION.

ALASKA ENERGY AUTHORITY
RURAL ENERGY GROUP
813 W. NORTHERN LIGHTS BLVD.
ANCHORAGE, ALASKA 99503
HTTP://WWW.AIDEA.ORG

Plot date: 2013/9/16 – 12:50

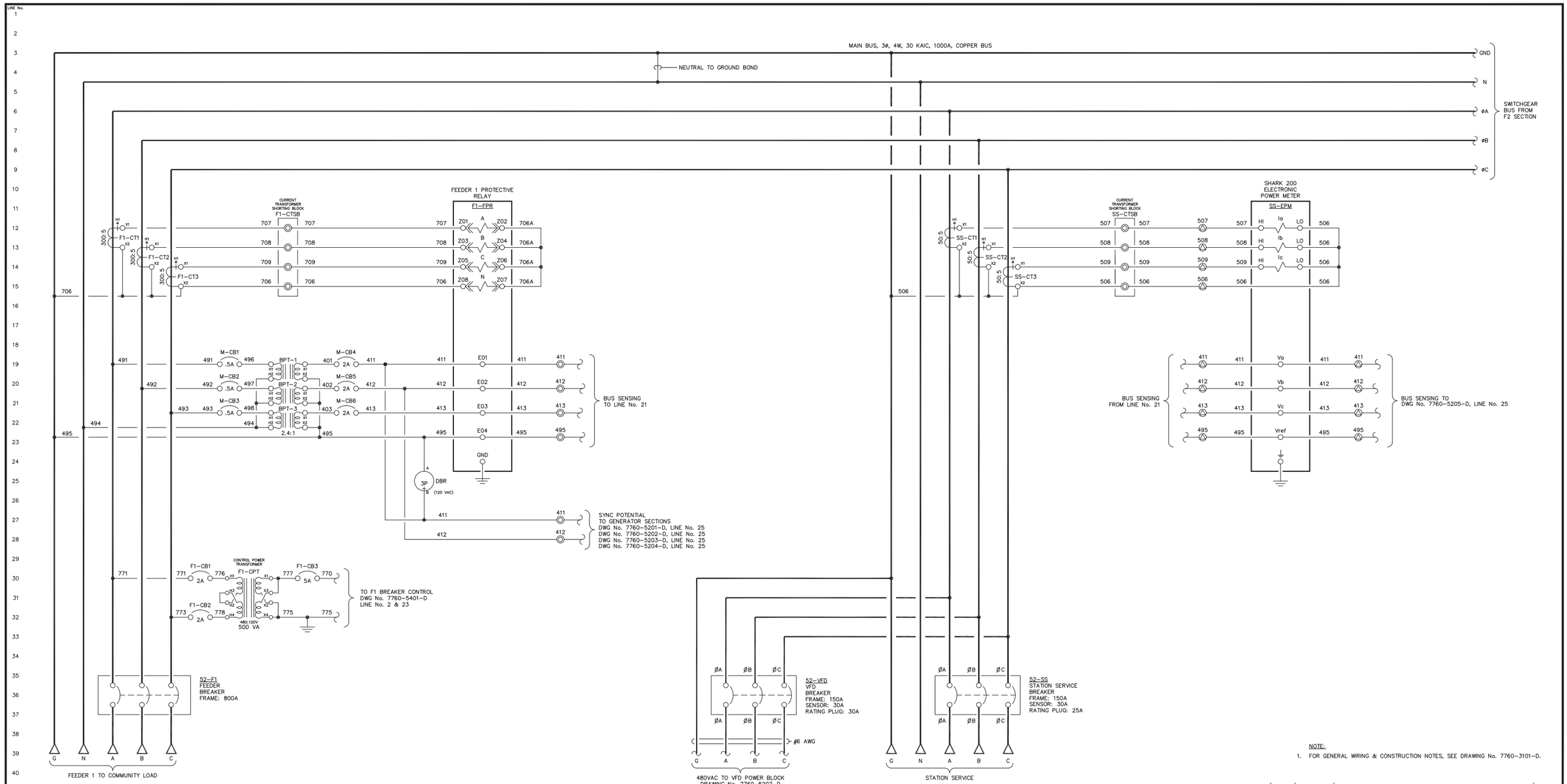

NOTE:

1. FOR GENERAL WIRING & CONSTRUCTION NOTES, SEE DRAWING No. 7760-3101-D.

REV.	DATE	DESCRIPTION	BY
C	05-15-13	SHOP AS BUILT	GPN
B	04-03-13	REVISED PER REVIEW	GPN
A	03-25-13	SUBMITTAL	GPN

AEA PURCHASE ORDER No. 007750 CONTROLLED POWER JOB No. 7760

TITLE: MASTER AC THREE LINE, SCHEMATIC DIAGRAM

SCALE: NONE | DATE: 03-19-13 | DWN. BY: GPN

DWG. No: 7760-5206-D | SHEET: 1 OF 1 | CKD. BY: JMD

JOB: ST GEORGE POWERHOUSE GENERATOR SWITCHGEAR

NOTICE
THE DRAWINGS, INFORMATION AND SUBJECT MATTER HEREOF ARE THE CONFIDENTIAL, SOLE AND EXCLUSIVE PROPERTY OF CONTROLLED POWER, INC., AND ARE NOT TO BE COPIED, REPRODUCED OR USED IN ANY MANNER FOR ANY PURPOSE WHATSOEVER WITHOUT WRITTEN CONSENT OR DIRECTION.

ALASKA ENERGY AUTHORITY
RURAL ENERGY GROUP
813 W. NORTHERN LIGHTS BLVD.
ANCHORAGE, ALASKA 99503
HTTP://WWW.AIDEA.ORG

Plot date: 2013/9/16 - 12:49

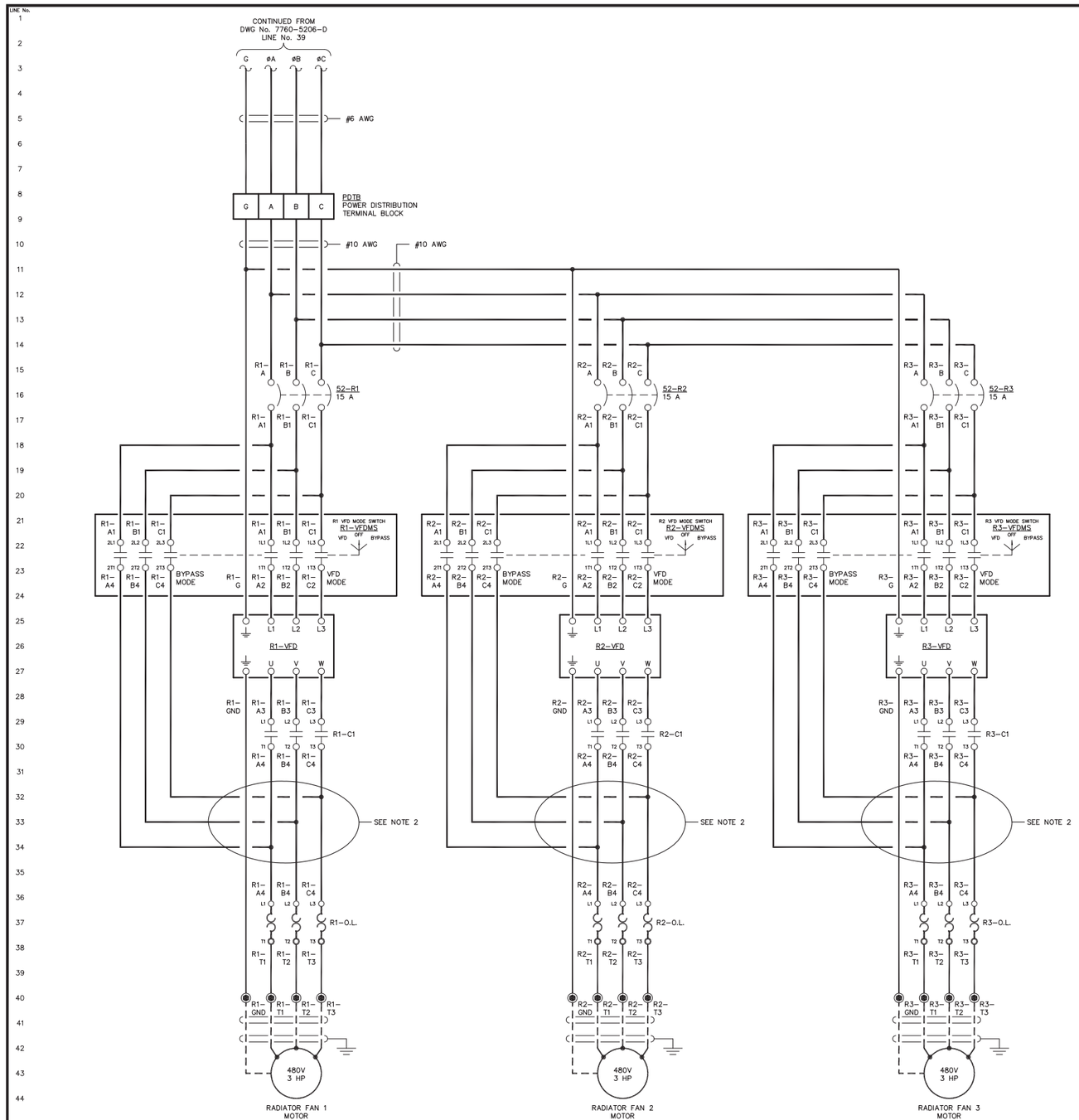

NOTE:

1. FOR GENERAL WIRING & CONSTRUCTION NOTES, SEE DRAWING No. 7760-3101-D.
2. VFD LOAD WIRES SHALL BE ROUTED SEPARATE FROM ALL OTHER WIRING OR SHIELDED TO AVOID RF INTERFERENCE.

REV.	DATE	DESCRIPTION	BY
C	05-15-13	SHOP AS BUILT	GPN
B	04-03-13	REVISED PER REVIEW	GPN
A	03-25-13	SUBMITTAL	GPN

AEA PURCHASE ORDER No. 007750 CONTROLLED POWER JOB No. 7760

TITLE: VFD THREE LINE, SCHEMATIC DIAGRAM

SCALE: NONE | DATE: 03-19-13 | DWN. BY: GPN

DWG. No: 7760-5207-D | SHEET: 1 OF 1 | CKD. BY: JMD

JOB: ST GEORGE POWERHOUSE GENERATOR SWITCHGEAR

NOTICE
THE DRAWINGS, INFORMATION AND SUBJECT MATTER HEREOF ARE THE CONFIDENTIAL, SOLE AND EXCLUSIVE PROPERTY OF CONTROLLED POWER, INC., AND ARE NOT TO BE COPIED, REPRODUCED OR USED IN ANY MANNER FOR ANY PURPOSE WHATSOEVER WITHOUT WRITTEN CONSENT OR DIRECTION.

ALASKA ENERGY AUTHORITY
RURAL ENERGY GROUP
813 W. NORTHERN LIGHTS BLVD.
ANCHORAGE, ALASKA 99503
HTTP://WWW.AIDEA.ORG

Plot date: 2013/9/16 - 12:49

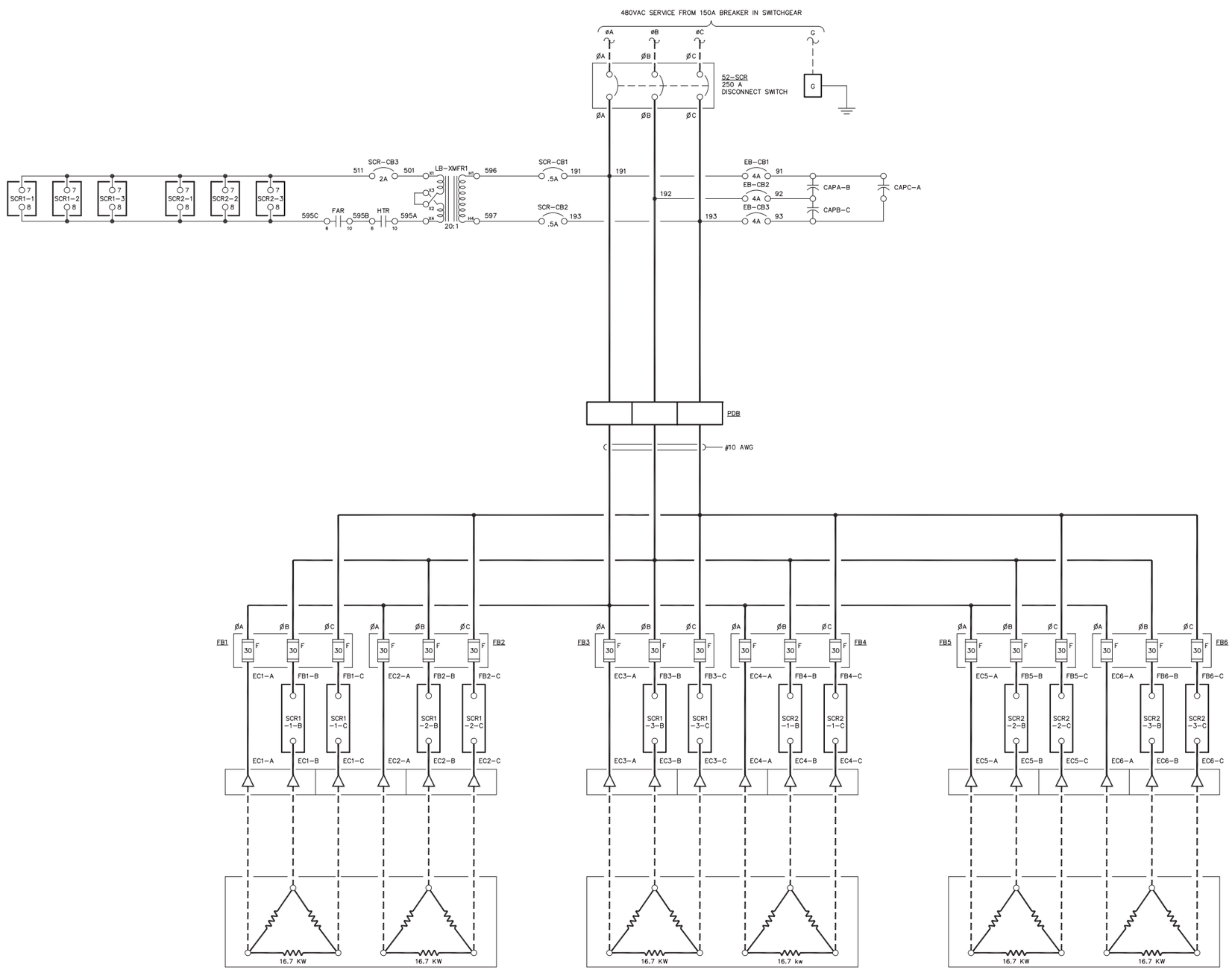

NOTE:

1. FOR GENERAL WIRING & CONSTRUCTION NOTES, SEE DRAWING No. 7569-3101-D.

REV.	DATE	DESCRIPTION	BY
C	05-15-13	SHOP AS BUILT	GPN
B	04-03-13	REVISED PER REVIEW	GPN
A	03-25-13	SUBMITTAL	GPN

AEA PURCHASE ORDER No. 007750 CONTROLLED POWER JOB No. 7760

TITLE: ELECTRIC BOILER AC THREE LINE, SCHEMATIC DIAGRAM

SCALE: NONE | DATE: 03-19-13 | DWN. BY: GPN

DWG. No: 7760-5208-D | SHEET: 1 OF 1 | CKD. BY: JMD

JOB: ST GEORGE POWERHOUSE GENERATOR SWITCHGEAR

NOTICE
THE DRAWINGS, INFORMATION AND SUBJECT MATTER HEREOF ARE THE CONFIDENTIAL, SOLE AND EXCLUSIVE PROPERTY OF CONTROLLED POWER, INC., AND ARE NOT TO BE COPIED, REPRODUCED OR USED IN ANY MANNER FOR ANY PURPOSE WHATSOEVER WITHOUT WRITTEN CONSENT OR DIRECTION.

ALASKA ENERGY AUTHORITY
RURAL ENERGY GROUP
813 W. NORTHERN LIGHTS BLVD.
ANCHORAGE, ALASKA 99503
HTTP://WWW.AIDEA.ORG

Plot date: 2013/9/16 - 12:49

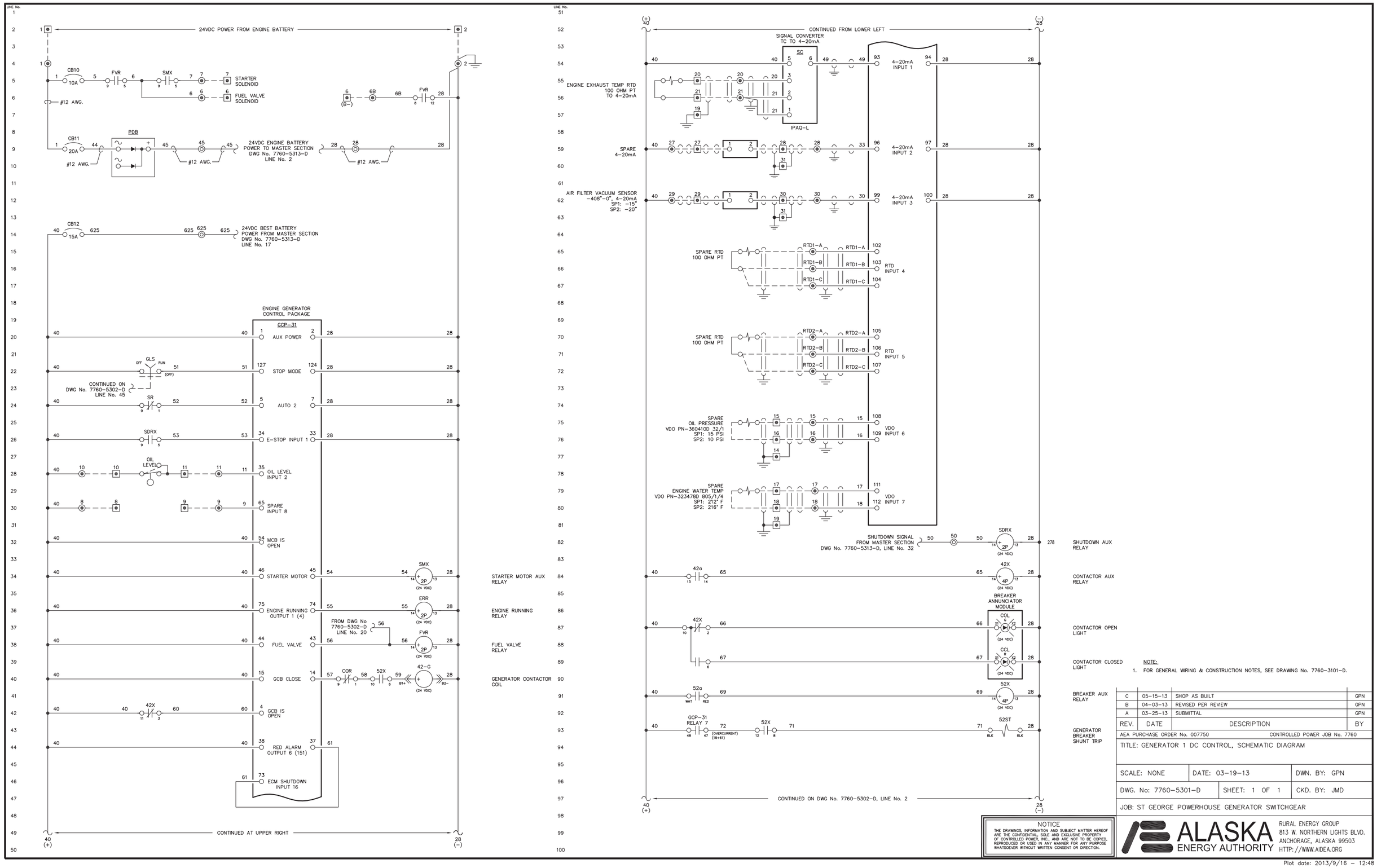

NOTE:

1. FOR GENERAL WIRING & CONSTRUCTION NOTES, SEE DRAWING No. 7760-3101-D.

REV.	DATE	DESCRIPTION	BY
C	05-15-13	SHOP AS BUILT	GPN
B	04-03-13	REVISED PER REVIEW	GPN
A	03-25-13	SUBMITTAL	GPN

AEA PURCHASE ORDER No. 007750 — CONTROLLED POWER JOB No. 7760

TITLE: GENERATOR 1 DC CONTROL, SCHEMATIC DIAGRAM

SCALE: NONE — DATE: 03-19-13 — DWN. BY: GPN

DWG. No: 7760-5301-D — SHEET: 1 OF 1 — CKD. BY: JMD

JOB: ST GEORGE POWERHOUSE GENERATOR SWITCHGEAR

NOTICE
THE DRAWINGS, INFORMATION AND SUBJECT MATTER HEREOF ARE THE CONFIDENTIAL, SOLE AND EXCLUSIVE PROPERTY OF CONTROLLED POWER, INC., AND ARE NOT TO BE COPIED, REPRODUCED OR USED IN ANY MANNER FOR ANY PURPOSE WHATSOEVER WITHOUT WRITTEN CONSENT OR DIRECTION.

ALASKA ENERGY AUTHORITY
RURAL ENERGY GROUP
813 W. NORTHERN LIGHTS BLVD.
ANCHORAGE, ALASKA 99503
HTTP://WWW.AIDEA.ORG

Plot date: 2013/9/16 – 12:48

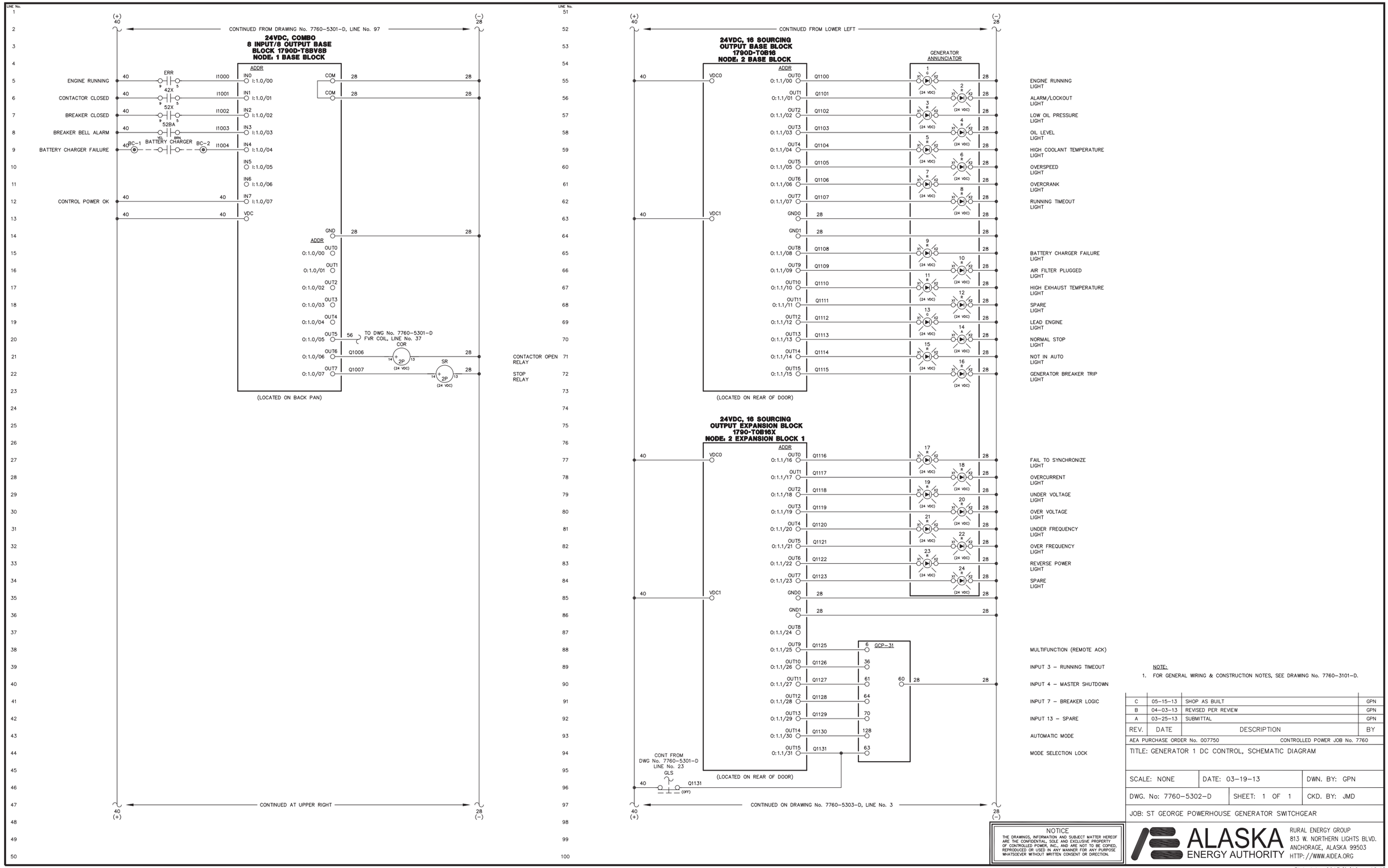

NOTE:

1. FOR GENERAL WIRING & CONSTRUCTION NOTES, SEE DRAWING No. 7760-3101-D.

REV.	DATE	DESCRIPTION	BY
C	05-15-13	SHOP AS BUILT	GPN
B	04-03-13	REVISED PER REVIEW	GPN
A	03-25-13	SUBMITTAL	GPN

AEA PURCHASE ORDER No. 007750 CONTROLLED POWER JOB No. 7760

TITLE: GENERATOR 1 DC CONTROL, SCHEMATIC DIAGRAM

SCALE: NONE | DATE: 03-19-13 | DWN. BY: GPN

DWG. No: 7760-5302-D | SHEET: 1 OF 1 | CKD. BY: JMD

JOB: ST GEORGE POWERHOUSE GENERATOR SWITCHGEAR

NOTICE
THE DRAWINGS, INFORMATION AND SUBJECT MATTER HEREOF ARE THE CONFIDENTIAL, SOLE AND EXCLUSIVE PROPERTY OF CONTROLLED POWER, INC., AND ARE NOT TO BE COPIED, REPRODUCED OR USED IN ANY MANNER FOR ANY PURPOSE WHATSOEVER WITHOUT WRITTEN CONSENT OR DIRECTION.

ALASKA ENERGY AUTHORITY
RURAL ENERGY GROUP
813 W. NORTHERN LIGHTS BLVD.
ANCHORAGE, ALASKA 99503
HTTP://WWW.AIDEA.ORG

Plot date: 2013/9/16 – 12:48

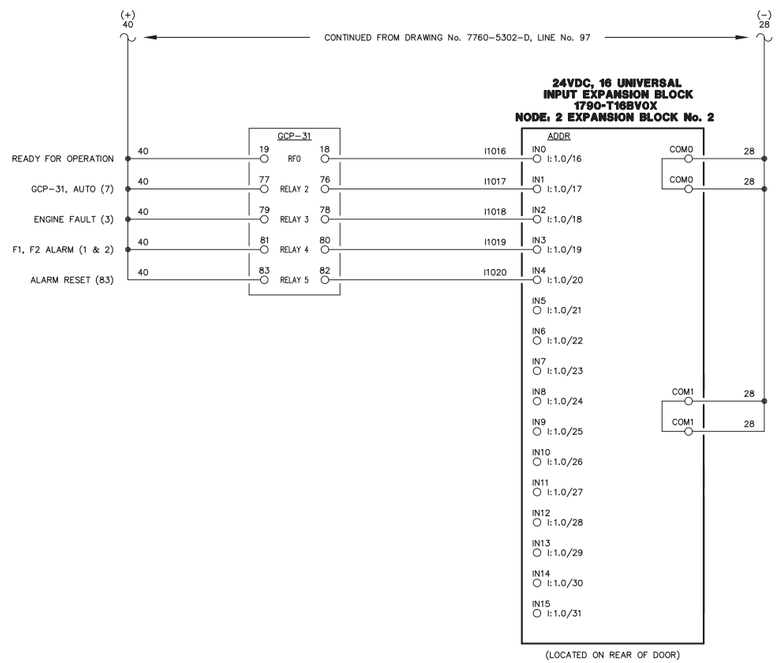

NOTE:

1. FOR GENERAL WIRING & CONSTRUCTION NOTES, SEE DRAWING No. 7760-3101-D.

REV.	DATE	DESCRIPTION	BY
C	05-15-13	SHOP AS BUILT	GPN
B	04-03-13	REVISED PER REVIEW	GPN
A	03-25-13	SUBMITTAL	GPN

AEA PURCHASE ORDER No. 007750 CONTROLLED POWER JOB No. 7760

TITLE: GENERATOR 1 DC CONTROL, SCHEMATIC DIAGRAM

SCALE: NONE	DATE: 03-19-13	DWN. BY: GPN
DWG. No: 7760-5303-D	SHEET: 1 OF 1	CKD. BY: JMD

JOB: ST GEORGE POWERHOUSE GENERATOR SWITCHGEAR

NOTICE
THE DRAWINGS, INFORMATION AND SUBJECT MATTER HEREOF ARE THE CONFIDENTIAL, SOLE AND EXCLUSIVE PROPERTY OF CONTROLLED POWER, INC., AND ARE NOT TO BE COPIED, REPRODUCED OR USED IN ANY MANNER FOR ANY PURPOSE WHATSOEVER WITHOUT WRITTEN CONSENT OR DIRECTION.

ALASKA ENERGY AUTHORITY
RURAL ENERGY GROUP
813 W. NORTHERN LIGHTS BLVD.
ANCHORAGE, ALASKA 99503
HTTP://WWW.AIDEA.ORG

Plot date: 2013/9/16 – 12:48

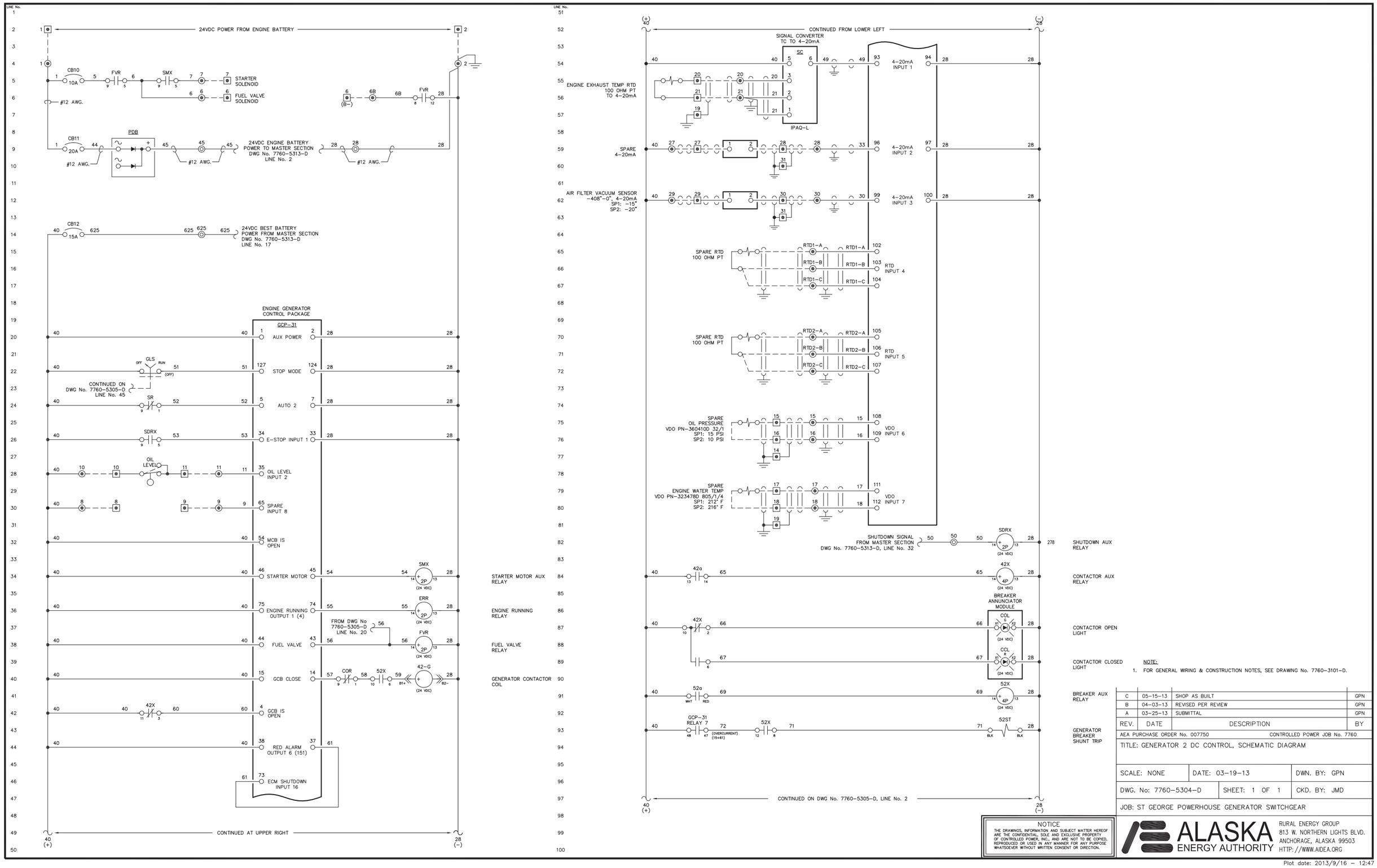

NOTE:

1. FOR GENERAL WIRING & CONSTRUCTION NOTES, SEE DRAWING No. 7760-3101-D.

REV.	DATE	DESCRIPTION	BY
C	05-15-13	SHOP AS BUILT	GPN
B	04-03-13	REVISED PER REVIEW	GPN
A	03-25-13	SUBMITTAL	GPN

AEA PURCHASE ORDER No. 007750 — CONTROLLED POWER JOB No. 7760

TITLE: GENERATOR 2 DC CONTROL, SCHEMATIC DIAGRAM

SCALE: NONE — DATE: 03-19-13 — DWN. BY: GPN

DWG. No: 7760-5304-D — SHEET: 1 OF 1 — CKD. BY: JMD

JOB: ST GEORGE POWERHOUSE GENERATOR SWITCHGEAR

NOTICE
THE DRAWINGS, INFORMATION AND SUBJECT MATTER HEREOF ARE THE CONFIDENTIAL, SOLE AND EXCLUSIVE PROPERTY OF CONTROLLED POWER, INC., AND ARE NOT TO BE COPIED, REPRODUCED OR USED IN ANY MANNER FOR ANY PURPOSE WHATSOEVER WITHOUT WRITTEN CONSENT OR DIRECTION.

ALASKA ENERGY AUTHORITY
RURAL ENERGY GROUP
813 W. NORTHERN LIGHTS BLVD.
ANCHORAGE, ALASKA 99503
HTTP://WWW.AIDEA.ORG

Plot date: 2013/9/16 – 12:47

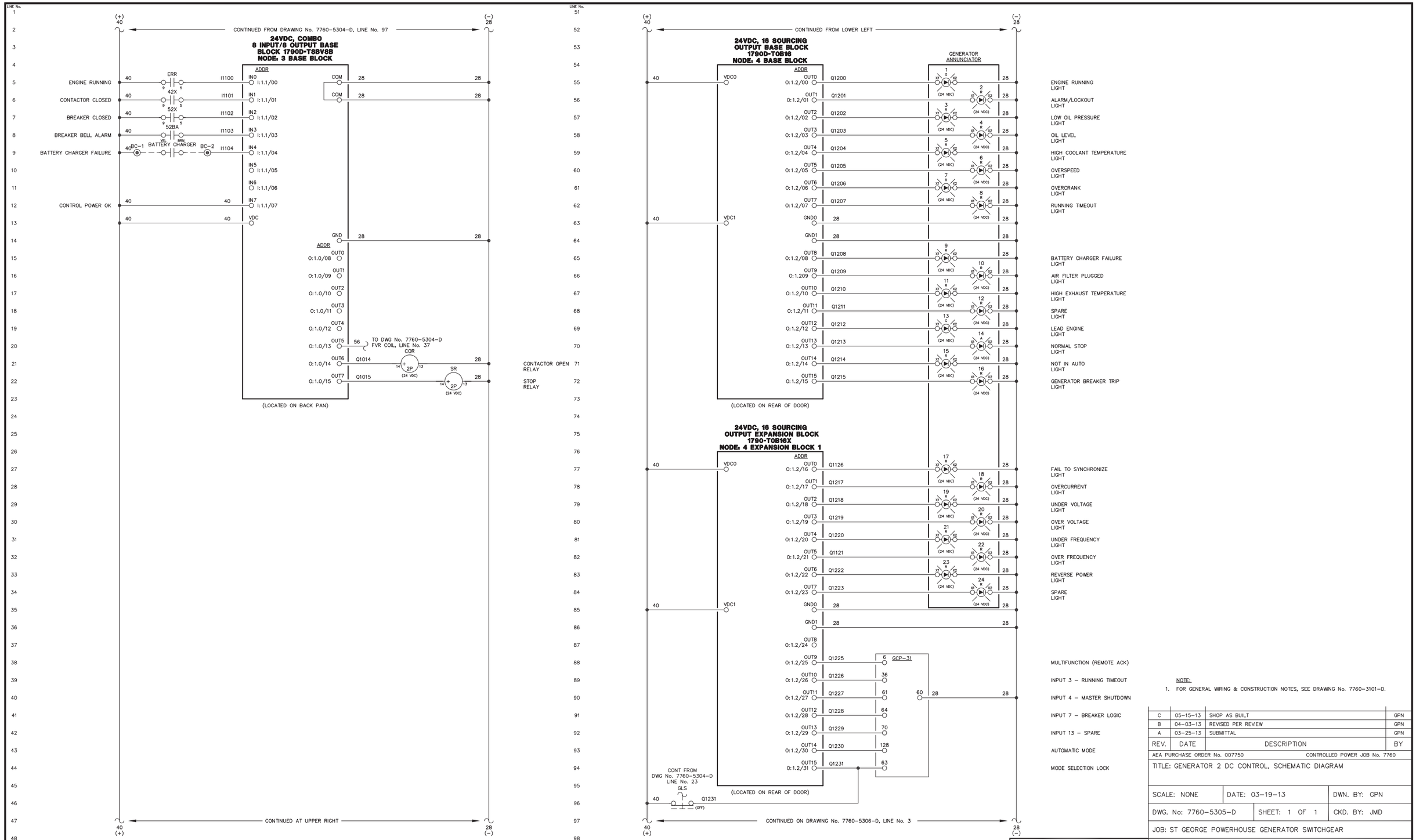

NOTE:

1. FOR GENERAL WIRING & CONSTRUCTION NOTES, SEE DRAWING No. 7760-3101-D.

REV.	DATE	DESCRIPTION	BY
C	05-15-13	SHOP AS BUILT	GPN
B	04-03-13	REVISED PER REVIEW	GPN
A	03-25-13	SUBMITTAL	GPN

AEA PURCHASE ORDER No. 007750 CONTROLLED POWER JOB No. 7760

TITLE: GENERATOR 2 DC CONTROL, SCHEMATIC DIAGRAM

SCALE: NONE | DATE: 03-19-13 | DWN. BY: GPN

DWG. No: 7760-5305-D | SHEET: 1 OF 1 | CKD. BY: JMD

JOB: ST GEORGE POWERHOUSE GENERATOR SWITCHGEAR

NOTICE
THE DRAWINGS, INFORMATION AND SUBJECT MATTER HEREOF ARE THE CONFIDENTIAL, SOLE AND EXCLUSIVE PROPERTY OF CONTROLLED POWER, INC., AND ARE NOT TO BE COPIED, REPRODUCED OR USED IN ANY MANNER FOR ANY PURPOSE WHATSOEVER WITHOUT WRITTEN CONSENT OR DIRECTION.

ALASKA ENERGY AUTHORITY
RURAL ENERGY GROUP
813 W. NORTHERN LIGHTS BLVD.
ANCHORAGE, ALASKA 99503
HTTP://WWW.AIDEA.ORG

Plot date: 2013/9/16 - 12:47

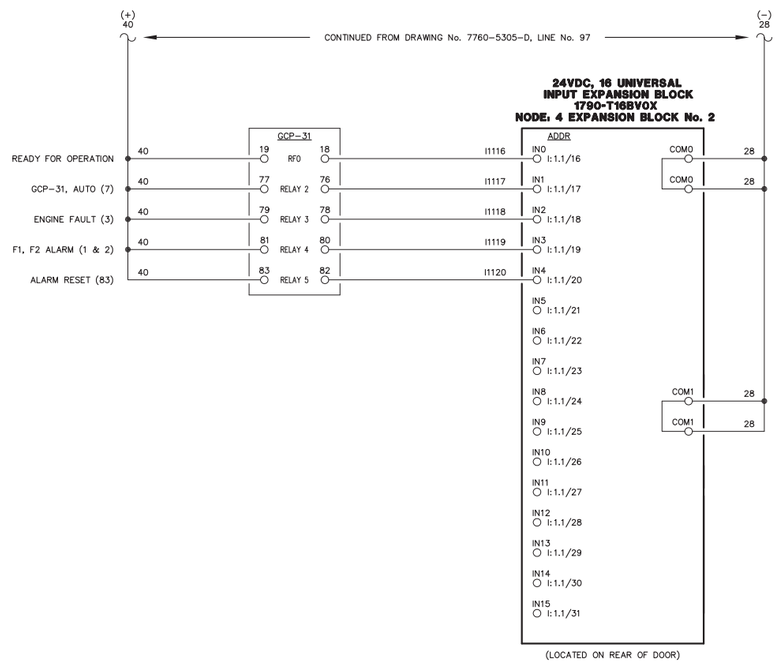

NOTE:

1. FOR GENERAL WIRING & CONSTRUCTION NOTES, SEE DRAWING No. 7760-3101-D.

REV.	DATE	DESCRIPTION	BY
C	05-15-13	SHOP AS BUILT	GPN
B	04-03-13	REVISED PER REVIEW	GPN
A	03-25-13	SUBMITTAL	GPN

AEA PURCHASE ORDER No. 007750 CONTROLLED POWER JOB No. 7760

TITLE: GENERATOR 2 DC CONTROL, SCHEMATIC DIAGRAM

SCALE: NONE	DATE: 03-19-13	DWN. BY: GPN
DWG. No: 7760-5306-D	SHEET: 1 OF 1	CKD. BY: JMD

JOB: ST GEORGE POWERHOUSE GENERATOR SWITCHGEAR

NOTICE
THE DRAWINGS, INFORMATION AND SUBJECT MATTER HEREOF ARE THE CONFIDENTIAL, SOLE AND EXCLUSIVE PROPERTY OF CONTROLLED POWER, INC., AND ARE NOT TO BE COPIED, REPRODUCED OR USED IN ANY MANNER FOR ANY PURPOSE WHATSOEVER WITHOUT WRITTEN CONSENT OR DIRECTION.

ALASKA ENERGY AUTHORITY
RURAL ENERGY GROUP
813 W. NORTHERN LIGHTS BLVD.
ANCHORAGE, ALASKA 99503
HTTP://WWW.AIDEA.ORG

Plot date: 2013/9/16 – 12:47

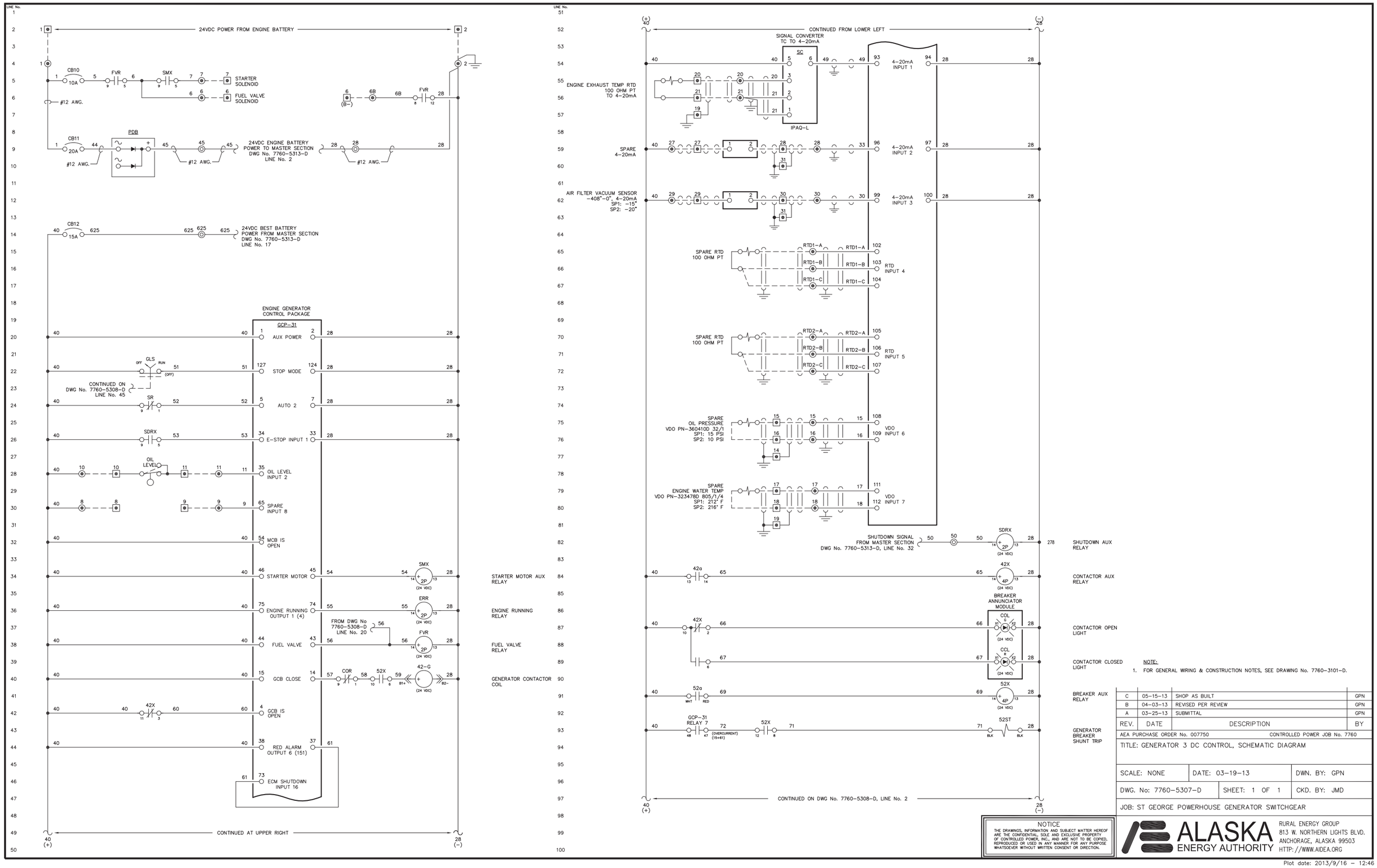

NOTE:

1. FOR GENERAL WIRING & CONSTRUCTION NOTES, SEE DRAWING No. 7760-3101-D.

REV.	DATE	DESCRIPTION	BY
C	05-15-13	SHOP AS BUILT	GPN
B	04-03-13	REVISED PER REVIEW	GPN
A	03-25-13	SUBMITTAL	GPN

AEA PURCHASE ORDER No. 007750 — CONTROLLED POWER JOB No. 7760

TITLE: GENERATOR 3 DC CONTROL, SCHEMATIC DIAGRAM

SCALE: NONE — DATE: 03-19-13 — DWN. BY: GPN

DWG. No: 7760-5307-D — SHEET: 1 OF 1 — CKD. BY: JMD

JOB: ST GEORGE POWERHOUSE GENERATOR SWITCHGEAR

NOTICE
THE DRAWINGS, INFORMATION AND SUBJECT MATTER HEREOF ARE THE CONFIDENTIAL, SOLE AND EXCLUSIVE PROPERTY OF CONTROLLED POWER, INC., AND ARE NOT TO BE COPIED, REPRODUCED OR USED IN ANY MANNER FOR ANY PURPOSE WHATSOEVER WITHOUT WRITTEN CONSENT OR DIRECTION.

ALASKA ENERGY AUTHORITY
RURAL ENERGY GROUP
813 W. NORTHERN LIGHTS BLVD.
ANCHORAGE, ALASKA 99503
HTTP://WWW.AIDEA.ORG

Plot date: 2013/9/16 – 12:46

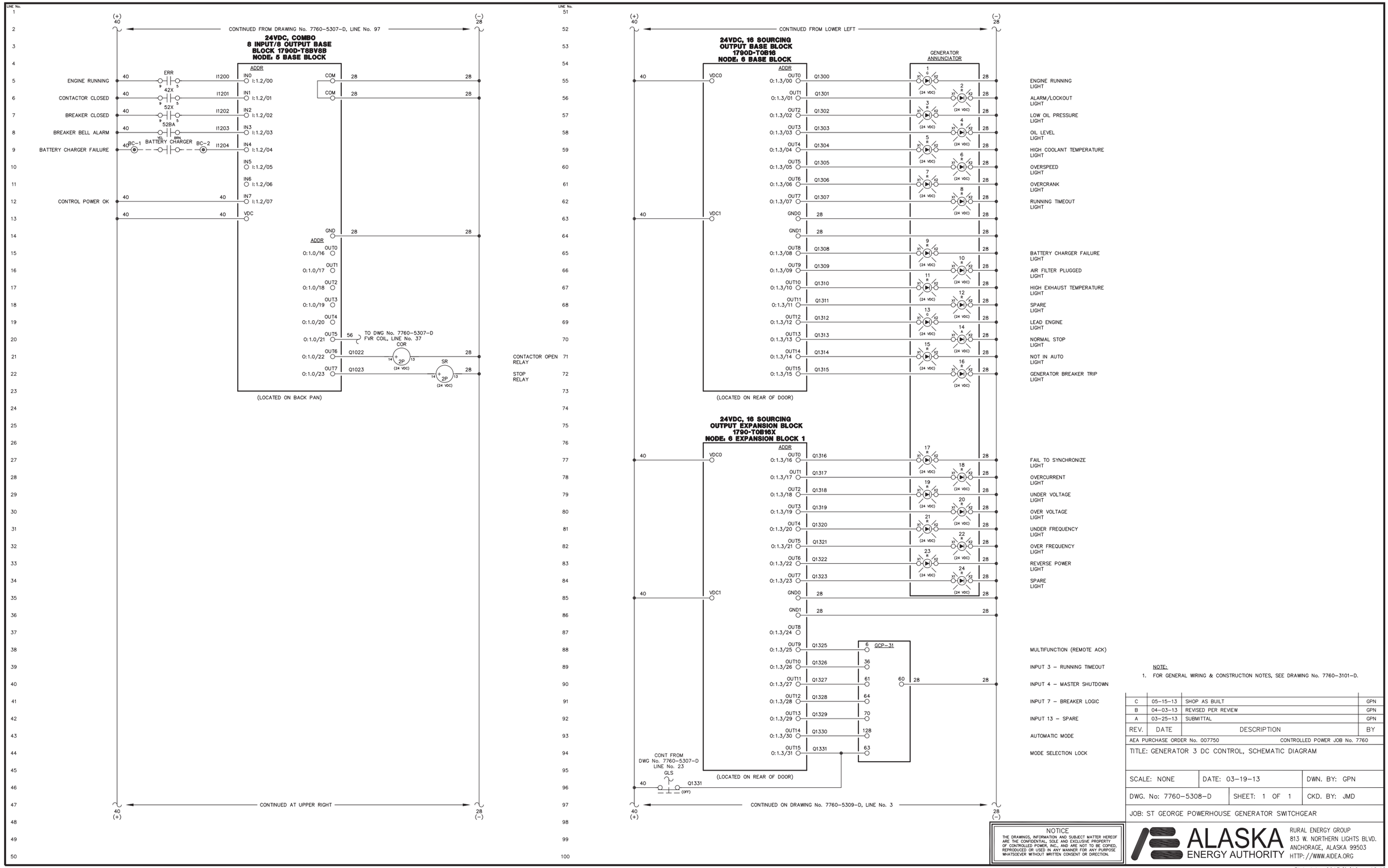

NOTE:

1. FOR GENERAL WIRING & CONSTRUCTION NOTES, SEE DRAWING No. 7760-3101-D.

REV.	DATE	DESCRIPTION	BY
C	05-15-13	SHOP AS BUILT	GPN
B	04-03-13	REVISED PER REVIEW	GPN
A	03-25-13	SUBMITTAL	GPN

AEA PURCHASE ORDER No. 007750 — CONTROLLED POWER JOB No. 7760

TITLE: GENERATOR 3 DC CONTROL, SCHEMATIC DIAGRAM

SCALE: NONE	DATE: 03-19-13	DWN. BY: GPN
DWG. No: 7760-5308-D	SHEET: 1 OF 1	CKD. BY: JMD

JOB: ST GEORGE POWERHOUSE GENERATOR SWITCHGEAR

NOTICE
THE DRAWINGS, INFORMATION AND SUBJECT MATTER HEREOF ARE THE CONFIDENTIAL, SOLE AND EXCLUSIVE PROPERTY OF CONTROLLED POWER, INC., AND ARE NOT TO BE COPIED, REPRODUCED OR USED IN ANY MANNER FOR ANY PURPOSE WHATSOEVER WITHOUT WRITTEN CONSENT OR DIRECTION.

ALASKA ENERGY AUTHORITY
RURAL ENERGY GROUP
813 W. NORTHERN LIGHTS BLVD.
ANCHORAGE, ALASKA 99503
HTTP://WWW.AIDEA.ORG

Plot date: 2013/9/16 – 12:46

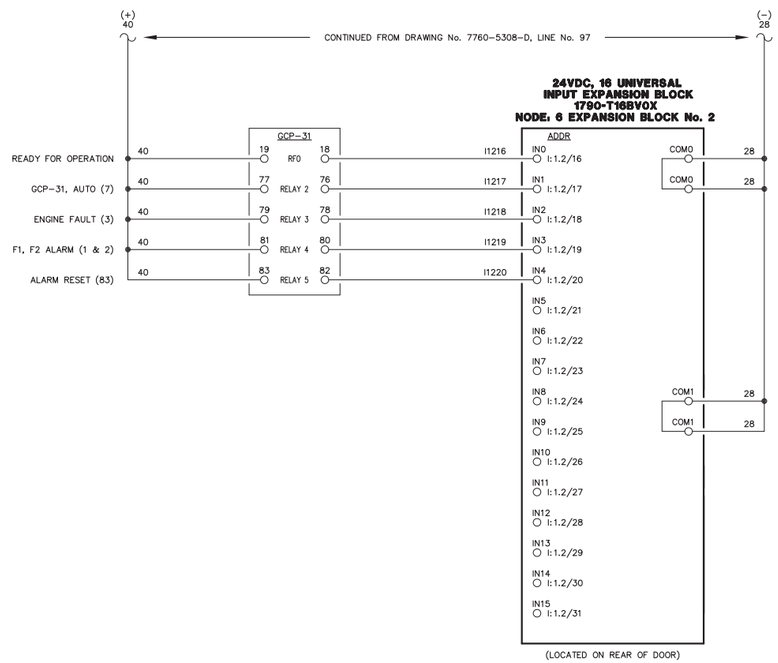

NOTE:

1. FOR GENERAL WIRING & CONSTRUCTION NOTES, SEE DRAWING No. 7760-3101-D.

REV.	DATE	DESCRIPTION	BY
C	05-15-13	SHOP AS BUILT	GPN
B	04-03-13	REVISED PER REVIEW	GPN
A	03-25-13	SUBMITTAL	GPN

AEA PURCHASE ORDER No. 007750 CONTROLLED POWER JOB No. 7760

TITLE: GENERATOR 3 DC CONTROL, SCHEMATIC DIAGRAM

SCALE: NONE	DATE: 03-19-13	DWN. BY: GPN
DWG. No: 7760-5309-D	SHEET: 1 OF 1	CKD. BY: JMD

JOB: ST GEORGE POWERHOUSE GENERATOR SWITCHGEAR

NOTICE
THE DRAWINGS, INFORMATION AND SUBJECT MATTER HEREOF ARE THE CONFIDENTIAL, SOLE AND EXCLUSIVE PROPERTY OF CONTROLLED POWER, INC., AND ARE NOT TO BE COPIED, REPRODUCED OR USED IN ANY MANNER FOR ANY PURPOSE WHATSOEVER WITHOUT WRITTEN CONSENT OR DIRECTION.

ALASKA ENERGY AUTHORITY
RURAL ENERGY GROUP
813 W. NORTHERN LIGHTS BLVD.
ANCHORAGE, ALASKA 99503
HTTP://WWW.AIDEA.ORG

Plot date: 2013/9/16 – 12:46

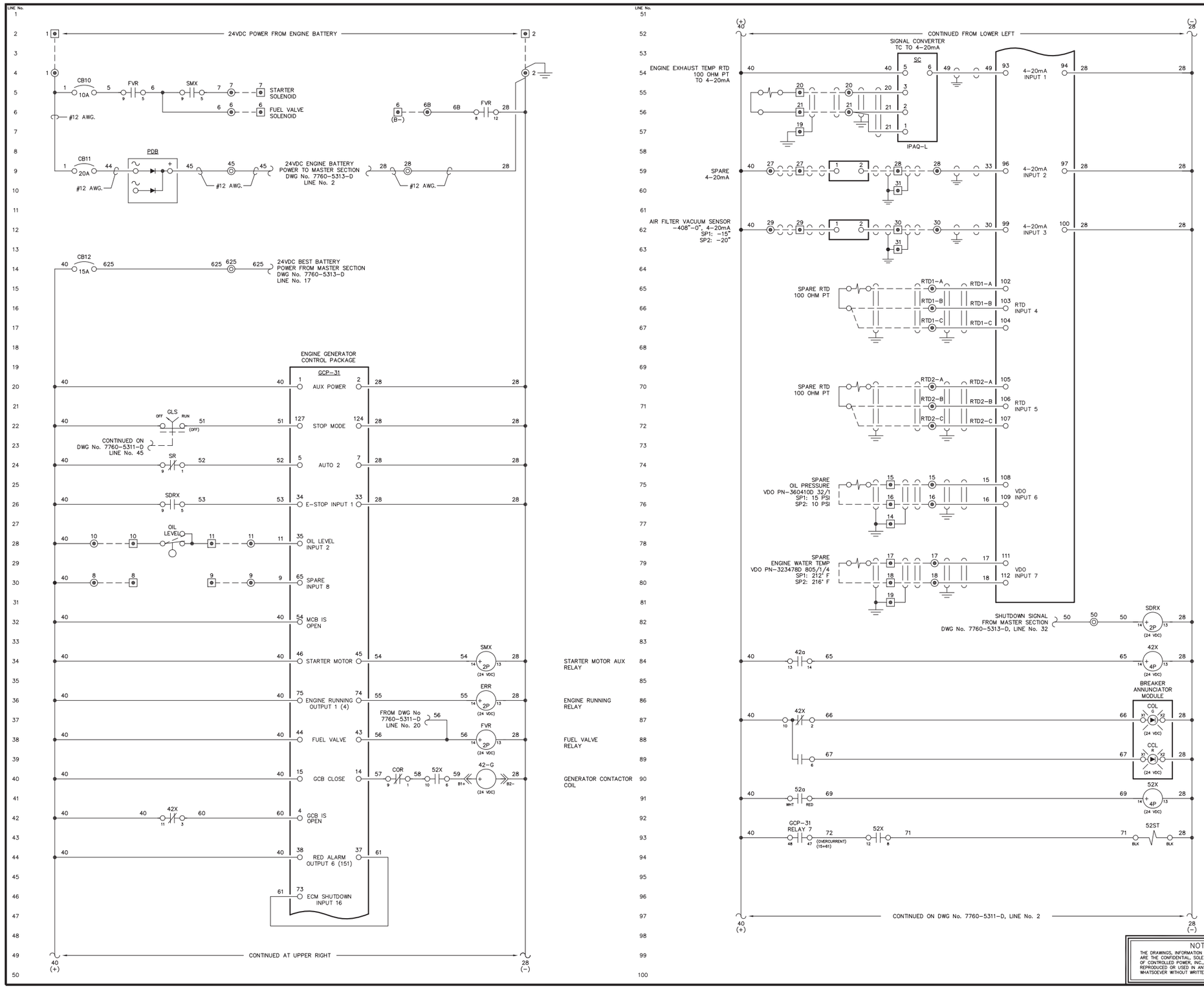

NOTE:

1. FOR GENERAL WIRING & CONSTRUCTION NOTES, SEE DRAWING No. 7760-3101-D.

REV.	DATE	DESCRIPTION	BY
C	05-15-13	SHOP AS BUILT	GPN
B	04-03-13	REVISED PER REVIEW	GPN
A	03-25-13	SUBMITTAL	GPN

AEA PURCHASE ORDER No. 007750 — CONTROLLED POWER JOB No. 7760

TITLE: GENERATOR 4 DC CONTROL, SCHEMATIC DIAGRAM

SCALE: NONE — DATE: 03-19-13 — DWN. BY: GPN

DWG. No: 7760-5310-D — SHEET: 1 OF 1 — CKD. BY: JMD

JOB: ST GEORGE POWERHOUSE GENERATOR SWITCHGEAR

NOTICE
THE DRAWINGS, INFORMATION AND SUBJECT MATTER HEREOF ARE THE CONFIDENTIAL, SOLE AND EXCLUSIVE PROPERTY OF CONTROLLED POWER, INC., AND ARE NOT TO BE COPIED, REPRODUCED OR USED IN ANY MANNER FOR ANY PURPOSE WHATSOEVER WITHOUT WRITTEN CONSENT OR DIRECTION.

ALASKA ENERGY AUTHORITY
RURAL ENERGY GROUP
813 W. NORTHERN LIGHTS BLVD.
ANCHORAGE, ALASKA 99503
HTTP://WWW.AIDEA.ORG

Plot date: 2013/9/16 – 12:45

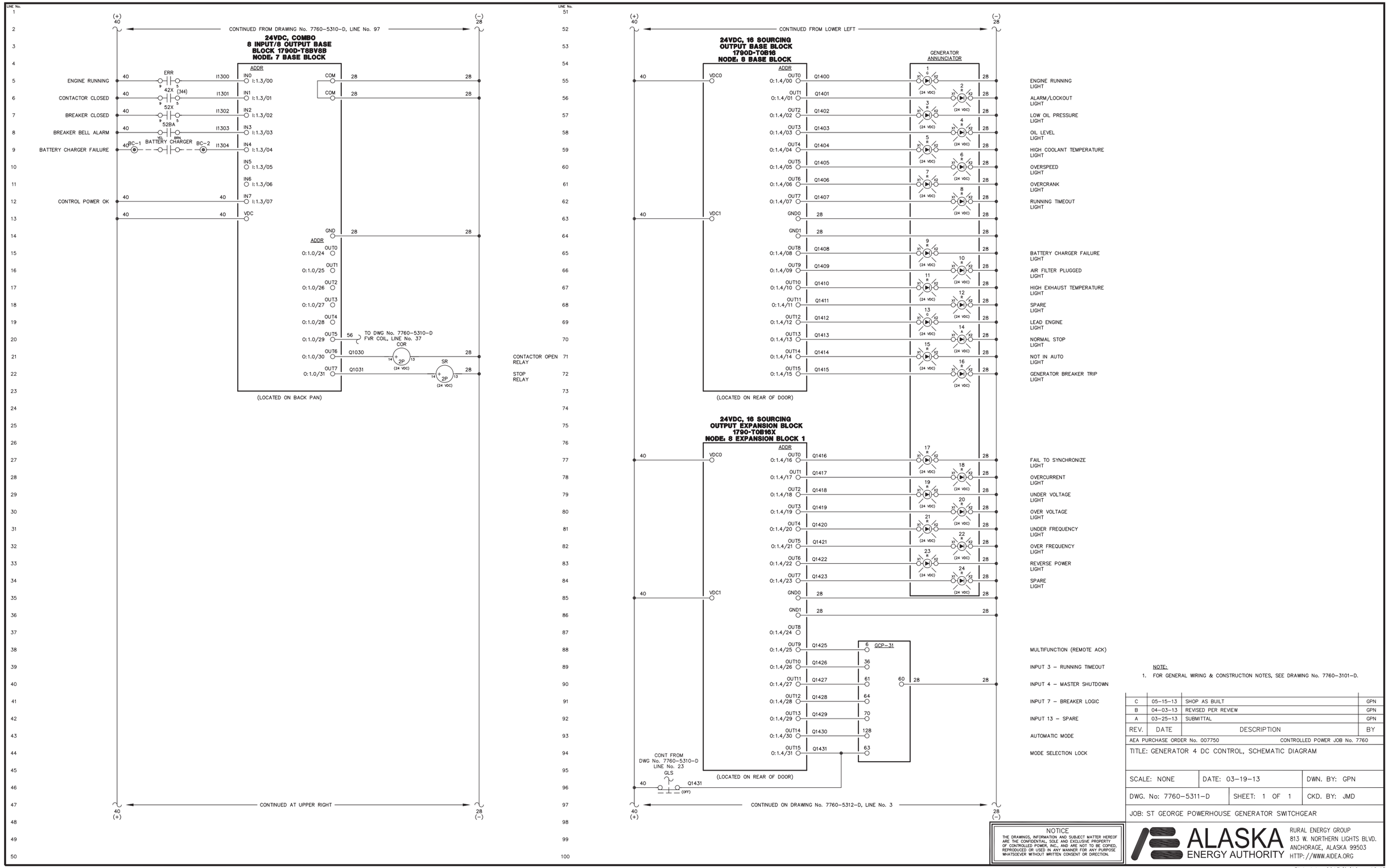

NOTE:
1. FOR GENERAL WIRING & CONSTRUCTION NOTES, SEE DRAWING No. 7760-3101-D.

REV.	DATE	DESCRIPTION	BY
C	05-15-13	SHOP AS BUILT	GPN
B	04-03-13	REVISED PER REVIEW	GPN
A	03-25-13	SUBMITTAL	GPN

AEA PURCHASE ORDER No. 007750 CONTROLLED POWER JOB No. 7760

TITLE: GENERATOR 4 DC CONTROL, SCHEMATIC DIAGRAM

SCALE: NONE | DATE: 03-19-13 | DWN. BY: GPN

DWG. No: 7760-5311-D | SHEET: 1 OF 1 | CKD. BY: JMD

JOB: ST GEORGE POWERHOUSE GENERATOR SWITCHGEAR

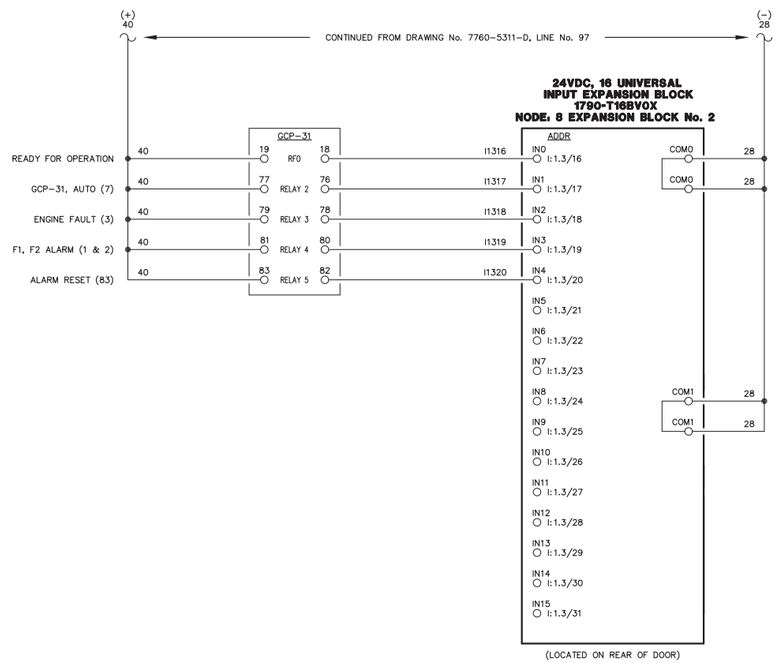

NOTE:

1. FOR GENERAL WIRING & CONSTRUCTION NOTES, SEE DRAWING No. 7760-3101-D.

REV.	DATE	DESCRIPTION	BY
C	05-15-13	SHOP AS BUILT	GPN
B	04-03-13	REVISED PER REVIEW	GPN
A	03-25-13	SUBMITTAL	GPN

AEA PURCHASE ORDER No. 007750 CONTROLLED POWER JOB No. 7760

TITLE: GENERATOR 4 DC CONTROL, SCHEMATIC DIAGRAM

SCALE: NONE	DATE: 03-19-13	DWN. BY: GPN
DWG. No: 7760-5312-D	SHEET: 1 OF 1	CKD. BY: JMD

JOB: ST GEORGE POWERHOUSE GENERATOR SWITCHGEAR

NOTICE
THE DRAWINGS, INFORMATION AND SUBJECT MATTER HEREOF ARE THE CONFIDENTIAL, SOLE AND EXCLUSIVE PROPERTY OF CONTROLLED POWER, INC., AND ARE NOT TO BE COPIED, REPRODUCED OR USED IN ANY MANNER FOR ANY PURPOSE WHATSOEVER WITHOUT WRITTEN CONSENT OR DIRECTION.

ALASKA ENERGY AUTHORITY
RURAL ENERGY GROUP
813 W. NORTHERN LIGHTS BLVD.
ANCHORAGE, ALASKA 99503
HTTP://WWW.AIDEA.ORG

Plot date: 2013/9/16 – 12:45

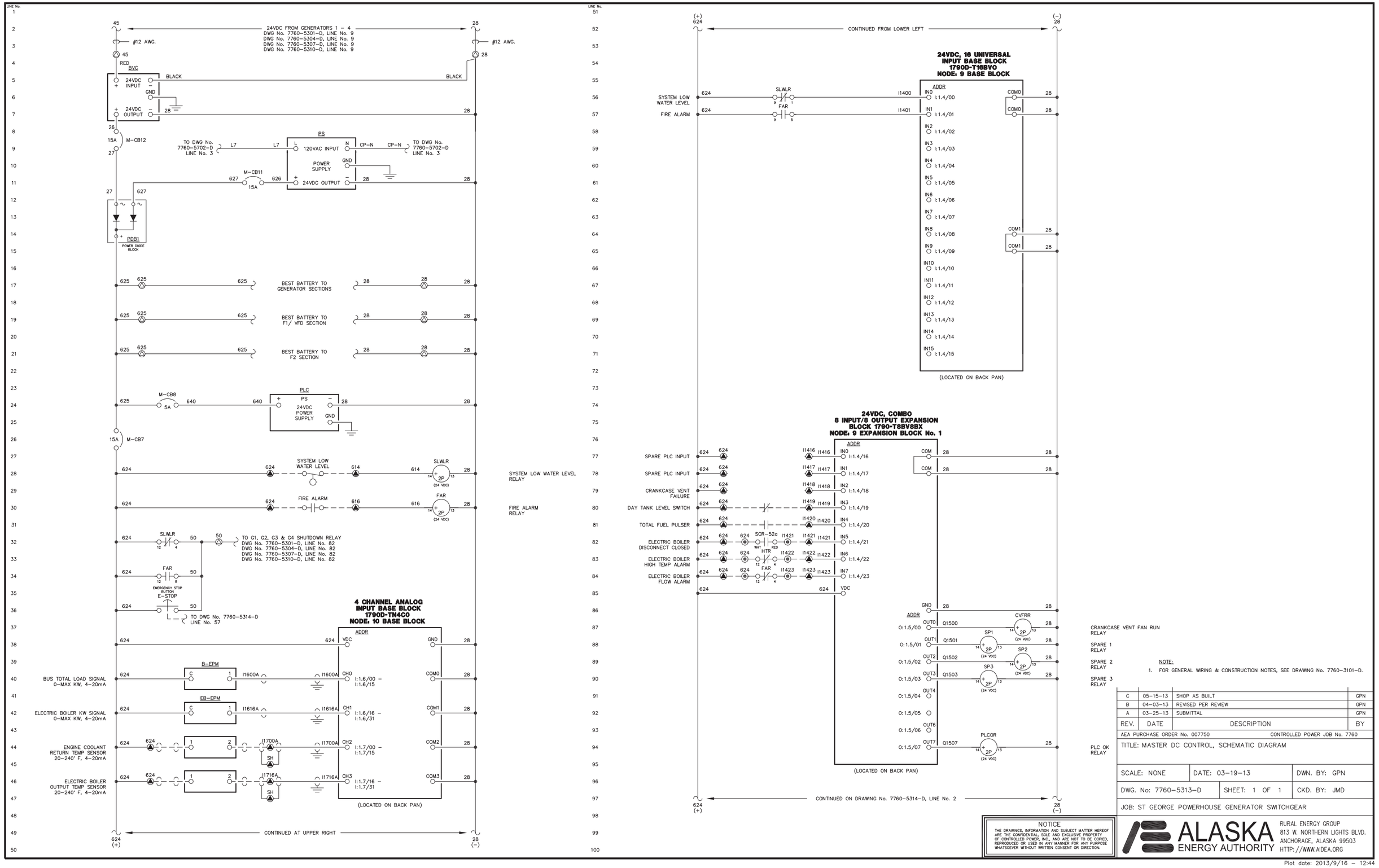

NOTE:
1. FOR GENERAL WIRING & CONSTRUCTION NOTES, SEE DRAWING No. 7760–3101–D.

REV.	DATE	DESCRIPTION	BY
C	05–15–13	SHOP AS BUILT	GPN
B	04–03–13	REVISED PER REVIEW	GPN
A	03–25–13	SUBMITTAL	GPN

AEA PURCHASE ORDER No. 007750 CONTROLLED POWER JOB No. 7760

TITLE: MASTER DC CONTROL, SCHEMATIC DIAGRAM

SCALE: NONE | DATE: 03–19–13 | DWN. BY: GPN

DWG. No: 7760–5313–D | SHEET: 1 OF 1 | CKD. BY: JMD

JOB: ST GEORGE POWERHOUSE GENERATOR SWITCHGEAR

NOTICE
THE DRAWINGS, INFORMATION AND SUBJECT MATTER HEREOF ARE THE CONFIDENTIAL, SOLE AND EXCLUSIVE PROPERTY OF CONTROLLED POWER, INC., AND ARE NOT TO BE COPIED, REPRODUCED OR USED IN ANY MANNER FOR ANY PURPOSE WHATSOEVER WITHOUT WRITTEN CONSENT OR DIRECTION.

ALASKA ENERGY AUTHORITY
RURAL ENERGY GROUP
813 W. NORTHERN LIGHTS BLVD.
ANCHORAGE, ALASKA 99503
HTTP://WWW.AIDEA.ORG

Plot date: 2013/9/16 – 12:44

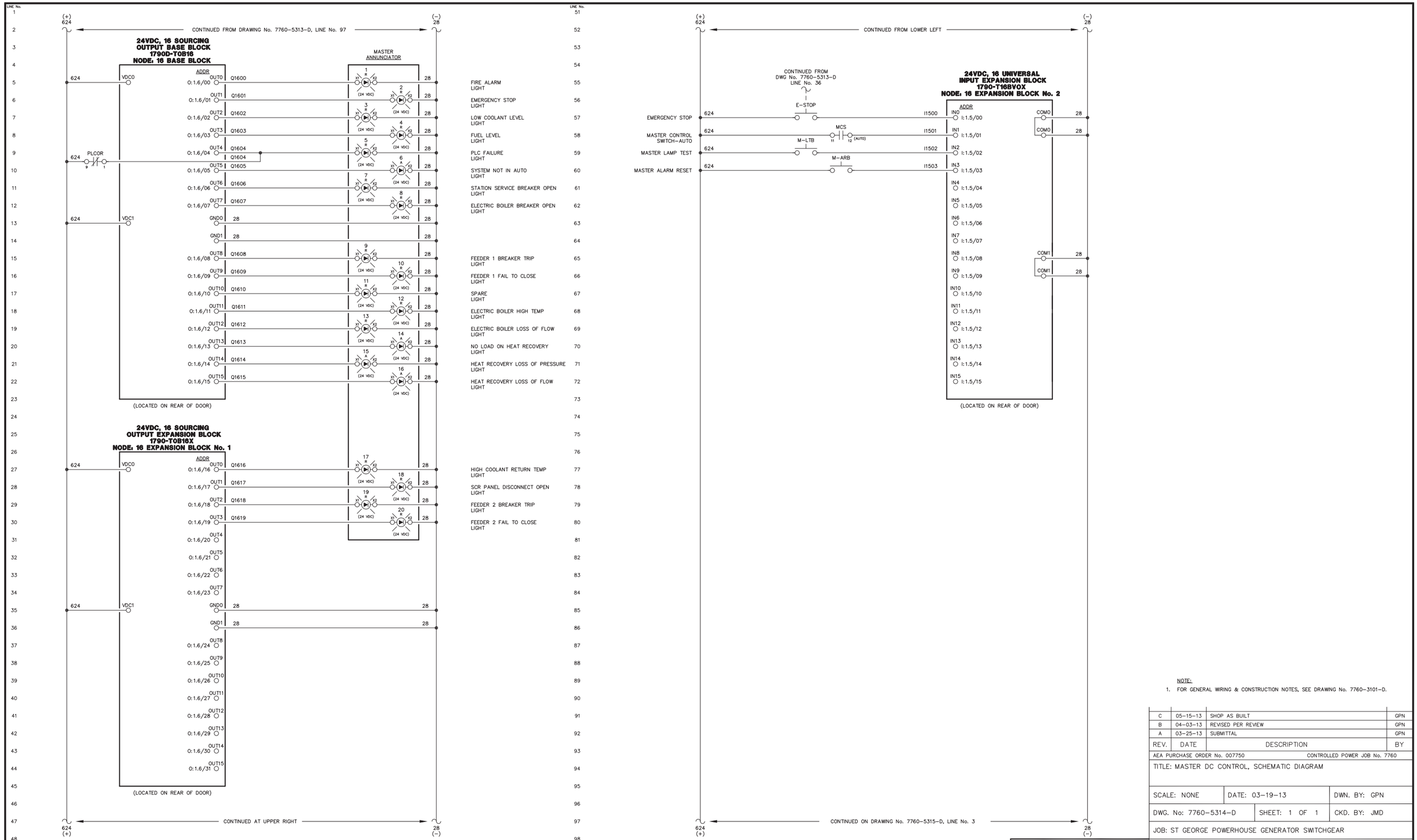

NOTE:

1. FOR GENERAL WIRING & CONSTRUCTION NOTES, SEE DRAWING No. 7760-3101-D.

REV.	DATE	DESCRIPTION	BY
C	05-15-13	SHOP AS BUILT	GPN
B	04-03-13	REVISED PER REVIEW	GPN
A	03-25-13	SUBMITTAL	GPN

AEA PURCHASE ORDER No. 007750 CONTROLLED POWER JOB No. 7760

TITLE: MASTER DC CONTROL, SCHEMATIC DIAGRAM

SCALE: NONE	DATE: 03-19-13	DWN. BY: GPN
DWG. No: 7760-5314-D	SHEET: 1 OF 1	CKD. BY: JMD

JOB: ST GEORGE POWERHOUSE GENERATOR SWITCHGEAR

NOTICE
THE DRAWINGS, INFORMATION AND SUBJECT MATTER HEREOF ARE THE CONFIDENTIAL, SOLE AND EXCLUSIVE PROPERTY OF CONTROLLED POWER, INC., AND ARE NOT TO BE COPIED, REPRODUCED OR USED IN ANY MANNER FOR ANY PURPOSE WHATSOEVER WITHOUT WRITTEN CONSENT OR DIRECTION.

ALASKA ENERGY AUTHORITY
RURAL ENERGY GROUP
813 W. NORTHERN LIGHTS BLVD.
ANCHORAGE, ALASKA 99503
HTTP://WWW.AIDEA.ORG

Plot date: 2013/9/16 - 12:44

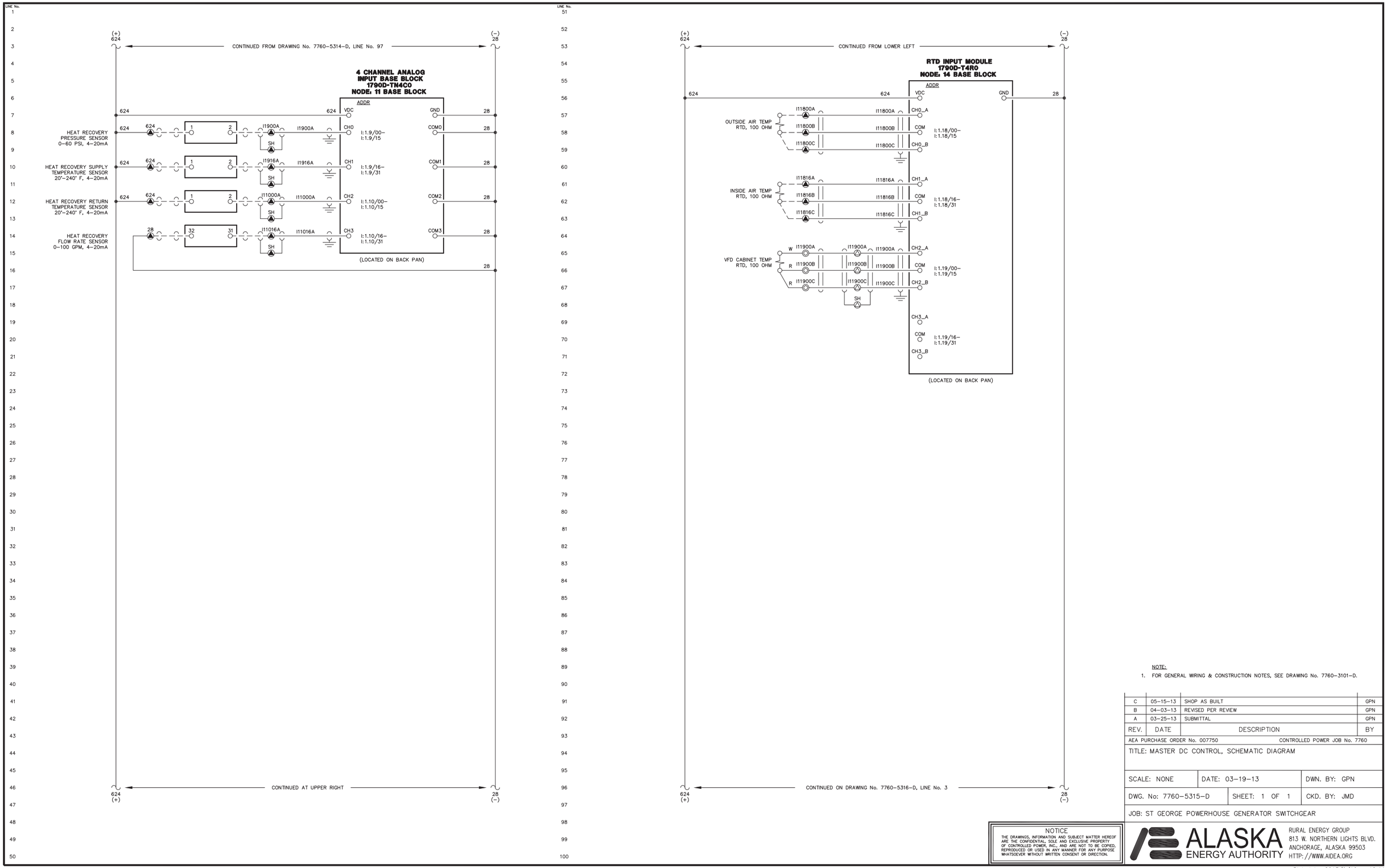

NOTE:

1. FOR GENERAL WIRING & CONSTRUCTION NOTES, SEE DRAWING No. 7760-3101-D.

REV.	DATE	DESCRIPTION	BY
C	05-15-13	SHOP AS BUILT	GPN
B	04-03-13	REVISED PER REVIEW	GPN
A	03-25-13	SUBMITTAL	GPN

AEA PURCHASE ORDER No. 007750 CONTROLLED POWER JOB No. 7760

TITLE: MASTER DC CONTROL, SCHEMATIC DIAGRAM

SCALE: NONE	DATE: 03-19-13	DWN. BY: GPN
DWG. No: 7760-5315-D	SHEET: 1 OF 1	CKD. BY: JMD

JOB: ST GEORGE POWERHOUSE GENERATOR SWITCHGEAR

NOTICE
THE DRAWINGS, INFORMATION AND SUBJECT MATTER HEREOF ARE THE CONFIDENTIAL, SOLE AND EXCLUSIVE PROPERTY OF CONTROLLED POWER, INC., AND ARE NOT TO BE COPIED, REPRODUCED OR USED IN ANY MANNER FOR ANY PURPOSE WHATSOEVER WITHOUT WRITTEN CONSENT OR DIRECTION.

ALASKA ENERGY AUTHORITY
RURAL ENERGY GROUP
813 W. NORTHERN LIGHTS BLVD.
ANCHORAGE, ALASKA 99503
HTTP://WWW.AIDEA.ORG

Plot date: 2013/9/16 - 12:44

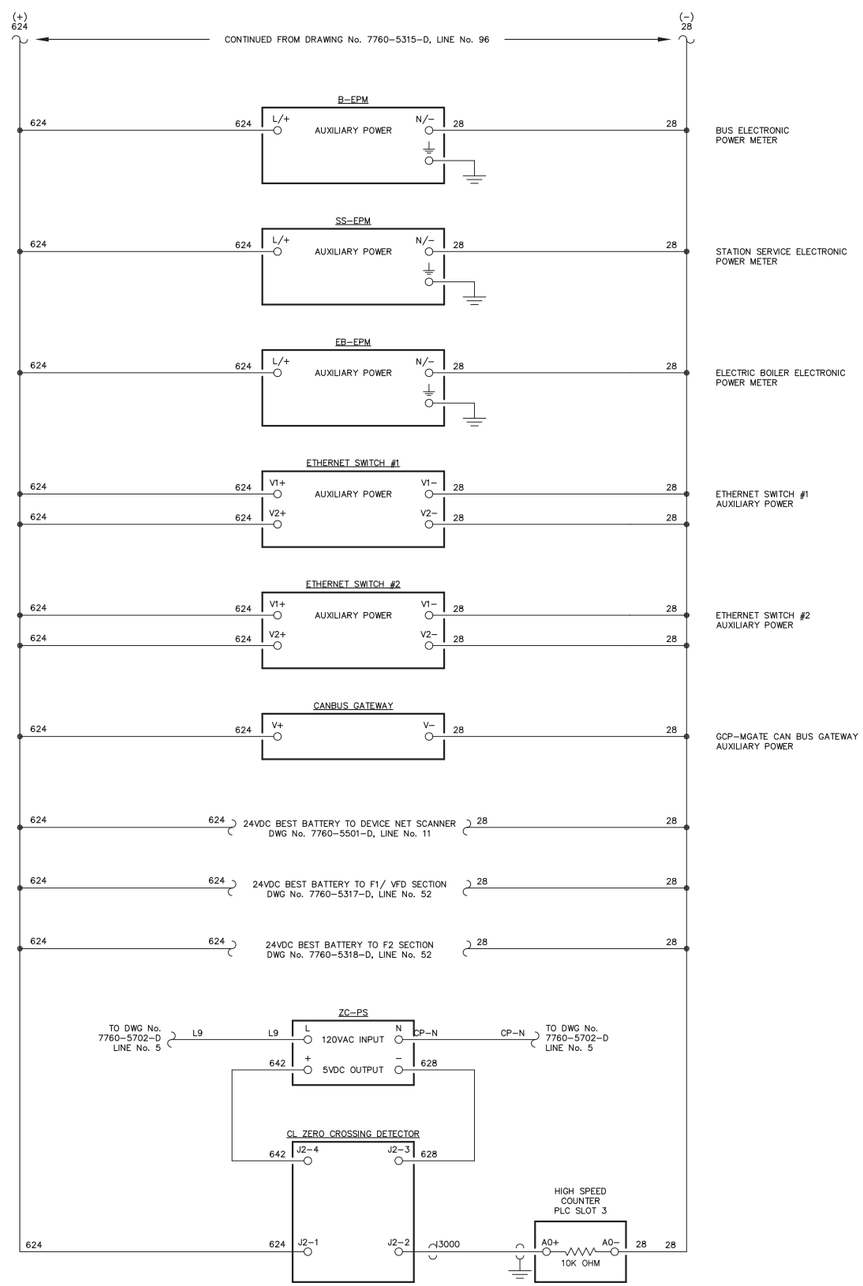

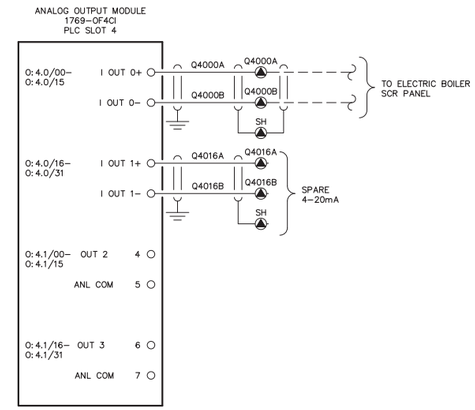

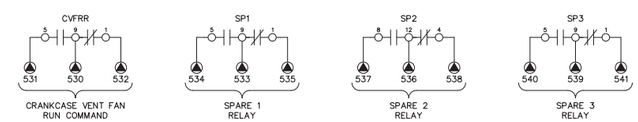

NOTE:

1. FOR GENERAL WIRING & CONSTRUCTION NOTES, SEE DRAWING No. 7760-3101-D.

REV.	DATE	DESCRIPTION	BY
C	05-15-13	SHOP AS BUILT	GPN
B	04-03-13	REVISED PER REVIEW	GPN
A	03-25-13	SUBMITTAL	GPN

AEA PURCHASE ORDER No. 007750 — CONTROLLED POWER JOB No. 7760

TITLE: MASTER DC CONTROL, SCHEMATIC DIAGRAM

SCALE: NONE | DATE: 03-19-13 | DWN. BY: GPN

DWG. No: 7760-5316-D | SHEET: 1 OF 1 | CKD. BY: JMD

JOB: ST GEORGE POWERHOUSE GENERATOR SWITCHGEAR

NOTICE
THE DRAWINGS, INFORMATION AND SUBJECT MATTER HEREOF ARE THE CONFIDENTIAL, SOLE AND EXCLUSIVE PROPERTY OF CONTROLLED POWER, INC., AND ARE NOT TO BE COPIED, REPRODUCED OR USED IN ANY MANNER FOR ANY PURPOSE WHATSOEVER WITHOUT WRITTEN CONSENT OR DIRECTION.

ALASKA ENERGY AUTHORITY
RURAL ENERGY GROUP
813 W. NORTHERN LIGHTS BLVD.
ANCHORAGE, ALASKA 99503
HTTP://WWW.AIDEA.ORG

Plot date: 2013/9/16 – 12:43

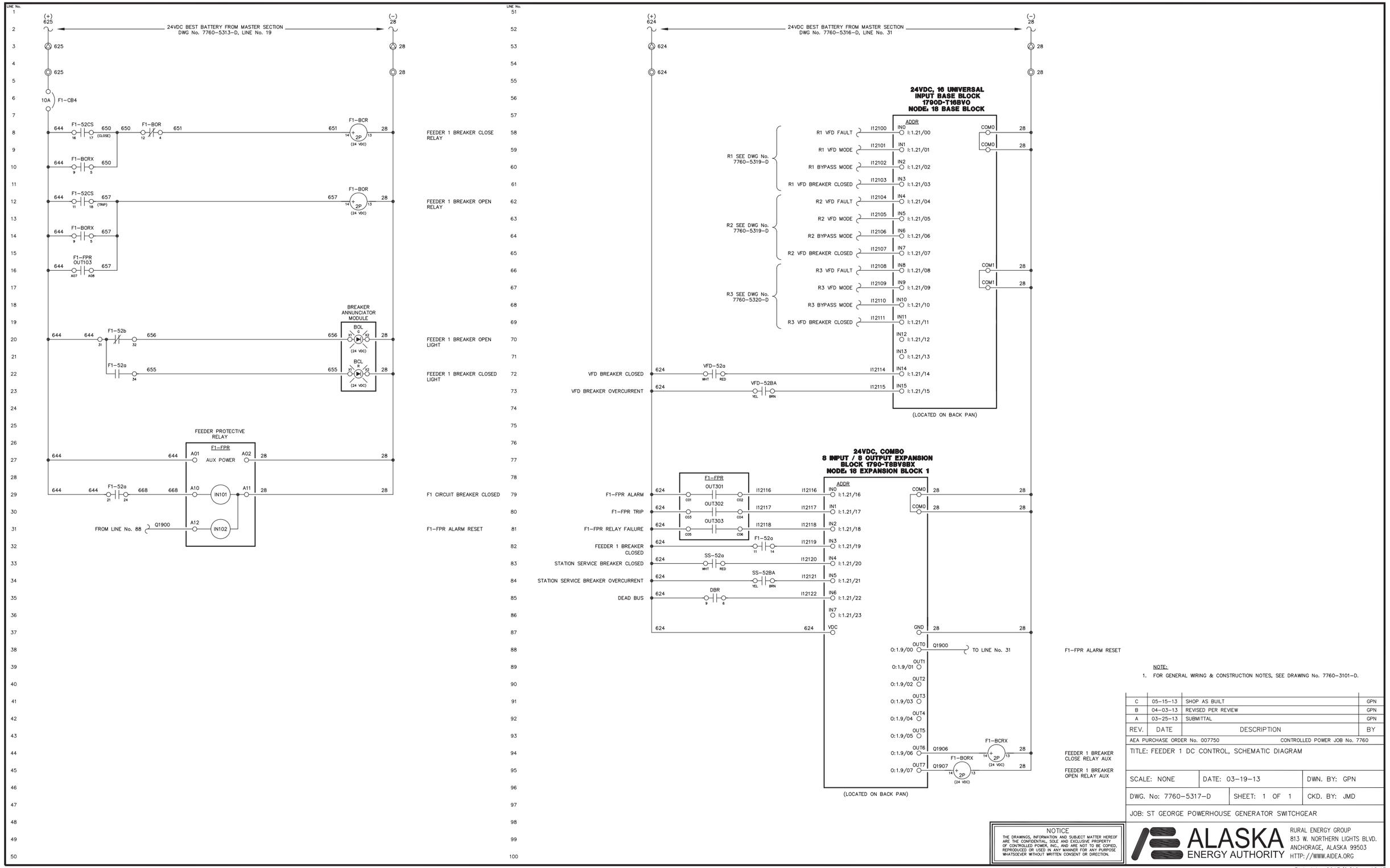

NOTE:
1. FOR GENERAL WIRING & CONSTRUCTION NOTES, SEE DRAWING No. 7760-3101-D.

REV.	DATE	DESCRIPTION	BY
C	05-15-13	SHOP AS BUILT	GPN
B	04-03-13	REVISED PER REVIEW	GPN
A	03-25-13	SUBMITTAL	GPN

AEA PURCHASE ORDER No. 007750 CONTROLLED POWER JOB No. 7760

TITLE: FEEDER 1 DC CONTROL, SCHEMATIC DIAGRAM

SCALE: NONE | DATE: 03-19-13 | DWN. BY: GPN

DWG. No: 7760-5317-D | SHEET: 1 OF 1 | CKD. BY: JMD

JOB: ST GEORGE POWERHOUSE GENERATOR SWITCHGEAR

NOTICE
THE DRAWINGS, INFORMATION AND SUBJECT MATTER HEREOF ARE THE CONFIDENTIAL, SOLE AND EXCLUSIVE PROPERTY OF CONTROLLED POWER, INC., AND ARE NOT TO BE COPIED, REPRODUCED OR USED IN ANY MANNER FOR ANY PURPOSE WHATSOEVER WITHOUT WRITTEN CONSENT OR DIRECTION.

ALASKA ENERGY AUTHORITY
RURAL ENERGY GROUP
813 W. NORTHERN LIGHTS BLVD.
ANCHORAGE, ALASKA 99503
HTTP://WWW.AIDEA.ORG

Plot date: 2013/9/16 - 12:43

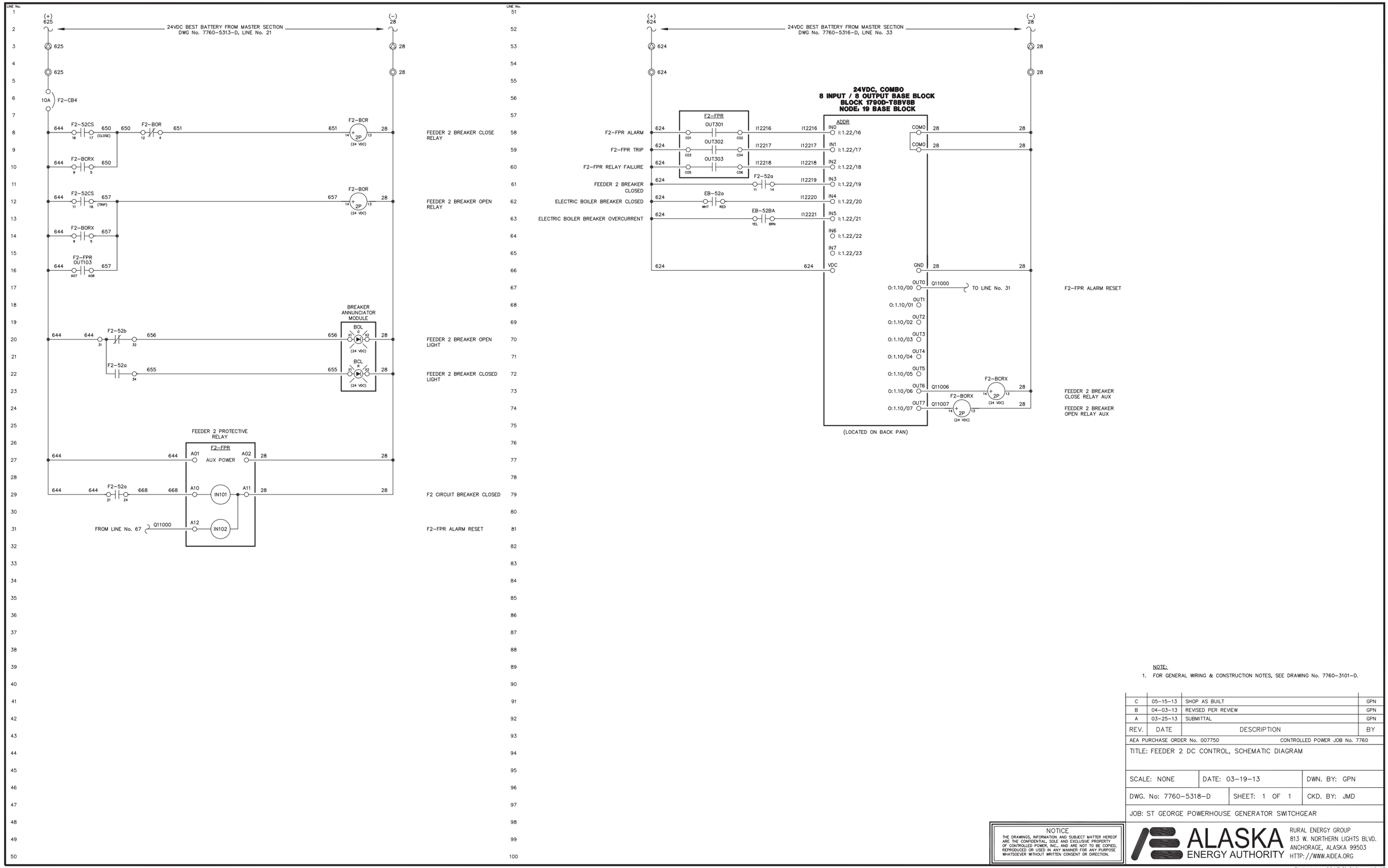

NOTE:

1. FOR GENERAL WIRING & CONSTRUCTION NOTES, SEE DRAWING No. 7760-3101-D.

REV.	DATE	DESCRIPTION	BY
C	05-15-13	SHOP AS BUILT	GPN
B	04-03-13	REVISED PER REVIEW	GPN
A	03-25-13	SUBMITTAL	GPN

AEA PURCHASE ORDER No. 007750 CONTROLLED POWER JOB No. 7760

TITLE: FEEDER 2 DC CONTROL, SCHEMATIC DIAGRAM

SCALE: NONE	DATE: 03-19-13	DWN. BY: GPN
DWG. No: 7760-5318-D	SHEET: 1 OF 1	CKD. BY: JMD

JOB: ST GEORGE POWERHOUSE GENERATOR SWITCHGEAR

NOTICE
THE DRAWINGS, INFORMATION AND SUBJECT MATTER HEREOF ARE THE CONFIDENTIAL, SOLE AND EXCLUSIVE PROPERTY OF CONTROLLED POWER, INC., AND ARE NOT TO BE COPIED, REPRODUCED OR USED IN ANY MANNER FOR ANY PURPOSE WHATSOEVER WITHOUT WRITTEN CONSENT OR DIRECTION.

ALASKA ENERGY AUTHORITY
RURAL ENERGY GROUP
813 W. NORTHERN LIGHTS BLVD.
ANCHORAGE, ALASKA 99503
HTTP://WWW.AIDEA.ORG

Plot date: 2013/9/16 – 12:43

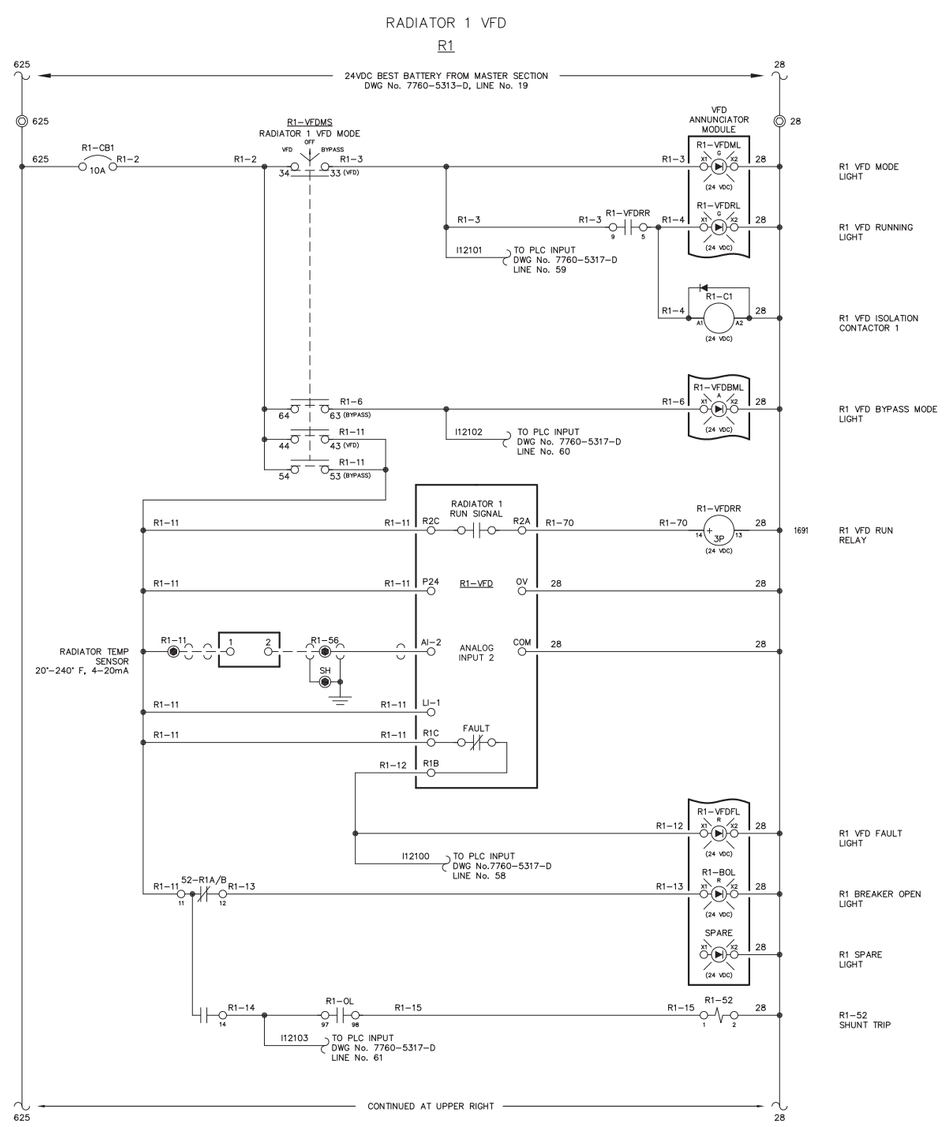

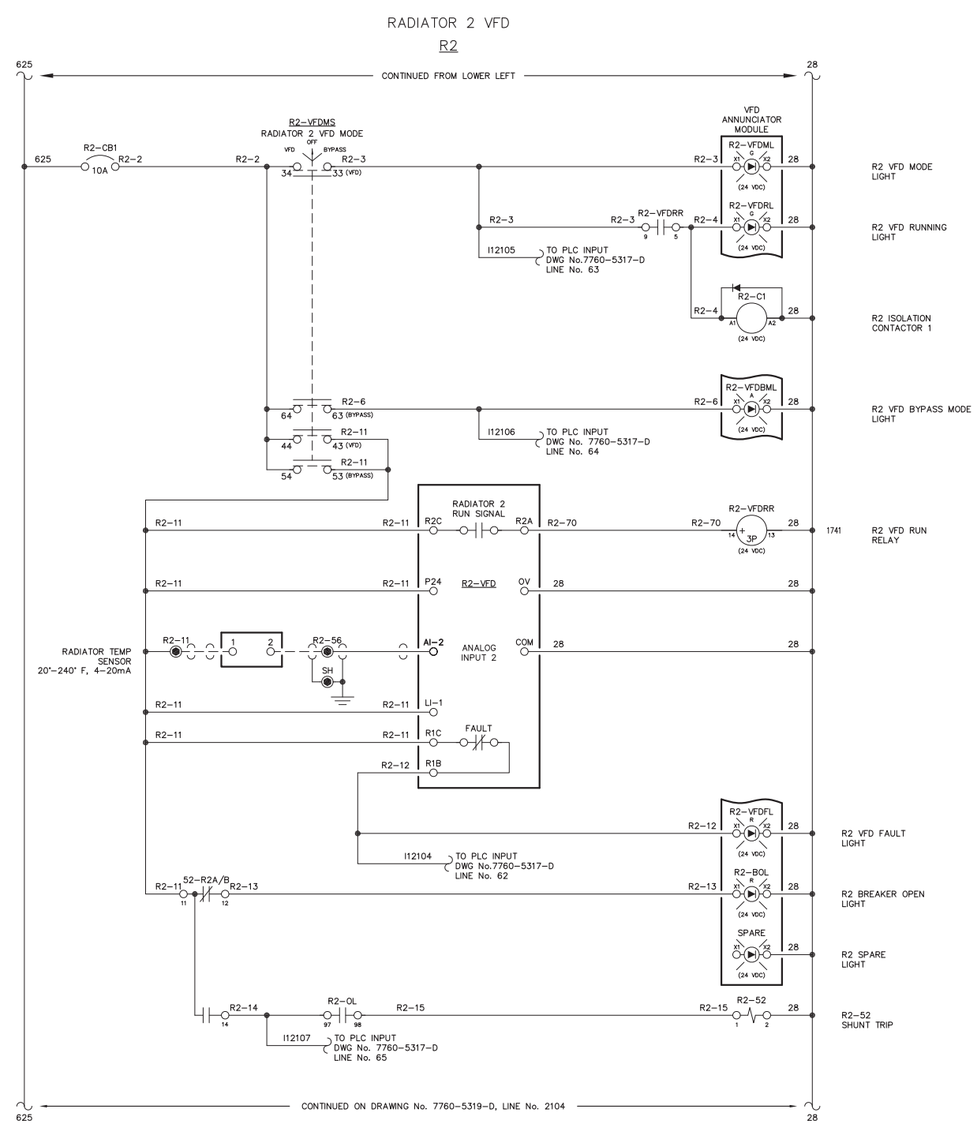

NOTE:

1. FOR GENERAL WIRING & CONSTRUCTION NOTES, SEE DRAWING No. 7760-3101-D.

REV.	DATE	DESCRIPTION	BY
C	05-15-13	SHOP AS BUILT	GPN
B	04-03-13	REVISED PER REVIEW	GPN
A	03-25-13	SUBMITTAL	GPN

AEA PURCHASE ORDER No. 007750 CONTROLLED POWER JOB No. 7760

TITLE: VFD DC CONTROL, SCHEMATIC DIAGRAM

SCALE: NONE	DATE: 03-19-13	DWN. BY: GPN
DWG. No: 7760-5319-D	SHEET: 1 OF 1	CKD. BY: JMD

JOB: ST GEORGE POWERHOUSE GENERATOR SWITCHGEAR

NOTICE
THE DRAWINGS, INFORMATION AND SUBJECT MATTER HEREOF ARE THE CONFIDENTIAL, SOLE AND EXCLUSIVE PROPERTY OF CONTROLLED POWER, INC., AND ARE NOT TO BE COPIED, REPRODUCED OR USED IN ANY MANNER FOR ANY PURPOSE WHATSOEVER WITHOUT WRITTEN CONSENT OR DIRECTION.

ALASKA ENERGY AUTHORITY
RURAL ENERGY GROUP
813 W. NORTHERN LIGHTS BLVD.
ANCHORAGE, ALASKA 99503
HTTP://WWW.AIDEA.ORG

Plot date: 2013/9/16 - 12:42

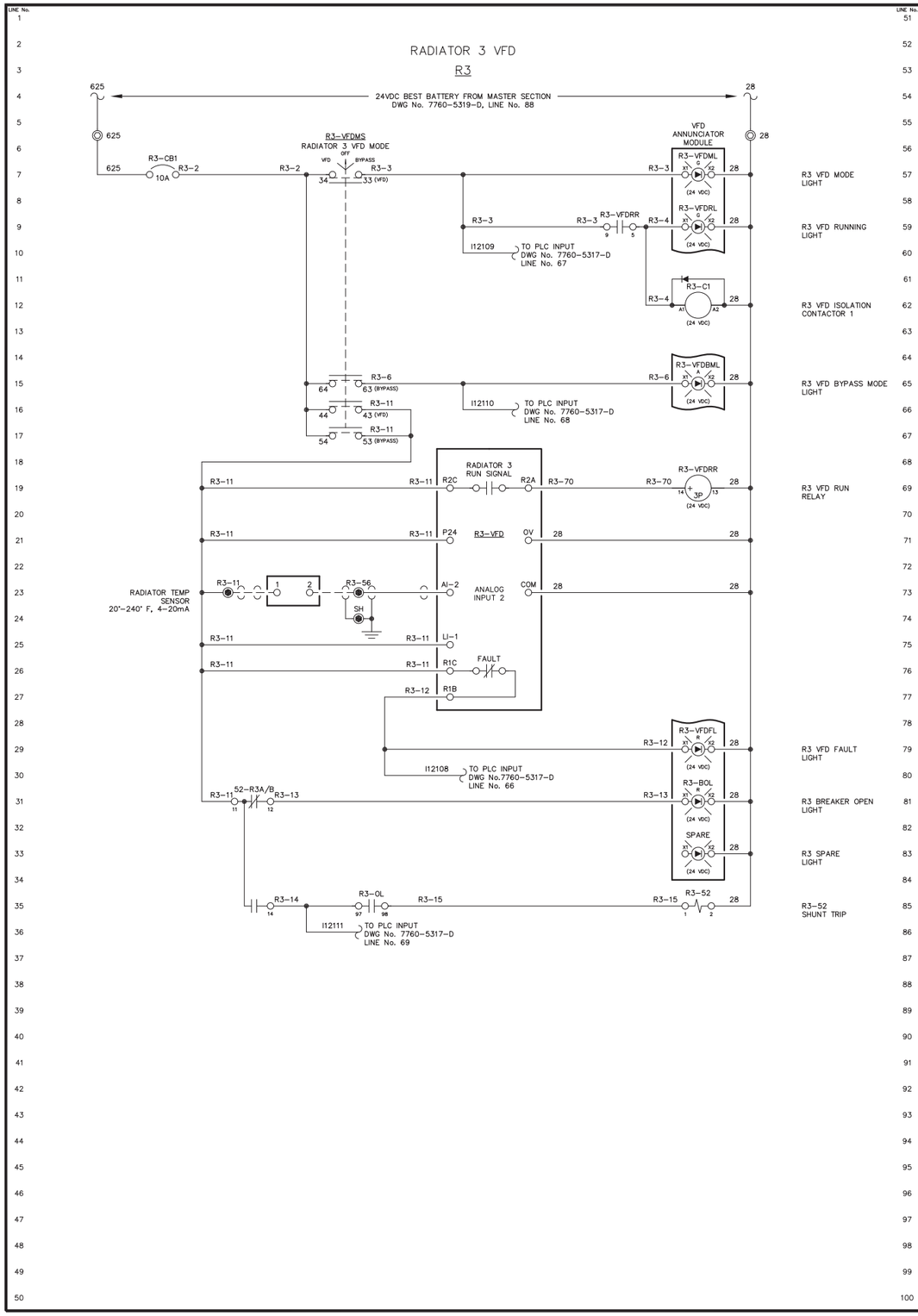

NOTE:

1. FOR GENERAL WIRING & CONSTRUCTION NOTES, SEE DRAWING No. 7760-3101-D.

REV.	DATE	DESCRIPTION	BY
C	05-15-13	SHOP AS BUILT	GPN
B	04-03-13	REVISED PER REVIEW	GPN
A	03-25-13	SUBMITTAL	GPN

AEA PURCHASE ORDER No. 007750 CONTROLLED POWER JOB No. 7760

TITLE: VFD DC CONTROL, SCHEMATIC DIAGRAM

SCALE: NONE	DATE: 03-19-13	DWN. BY: GPN
DWG. No: 7760-5320-D	SHEET: 1 OF 1	CKD. BY: JMD

JOB: ST GEORGE POWERHOUSE GENERATOR SWITCHGEAR

NOTICE
THE DRAWINGS, INFORMATION AND SUBJECT MATTER HEREOF ARE THE CONFIDENTIAL, SOLE AND EXCLUSIVE PROPERTY OF CONTROLLED POWER, INC., AND ARE NOT TO BE COPIED, REPRODUCED OR USED IN ANY MANNER FOR ANY PURPOSE WHATSOEVER WITHOUT WRITTEN CONSENT OR DIRECTION.

ALASKA ENERGY AUTHORITY
RURAL ENERGY GROUP
813 W. NORTHERN LIGHTS BLVD.
ANCHORAGE, ALASKA 99503
HTTP://WWW.AIDEA.ORG

Plot date: 2013/9/16 - 12:42

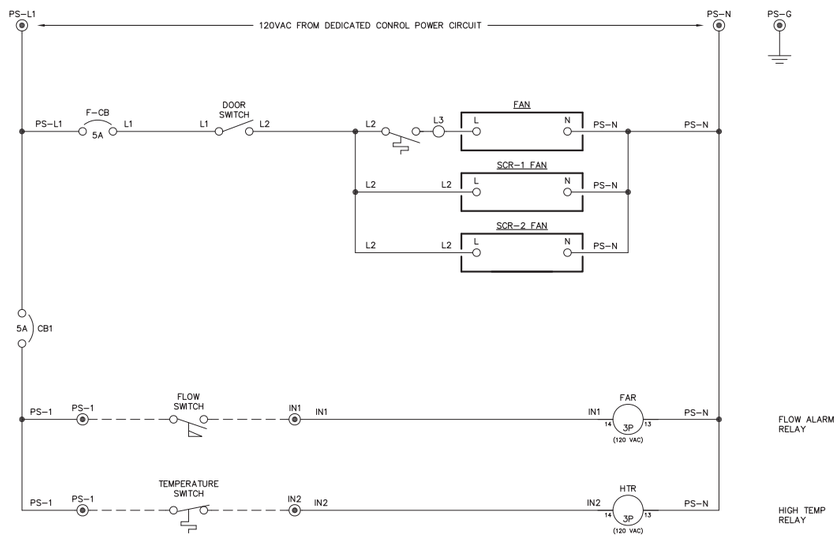

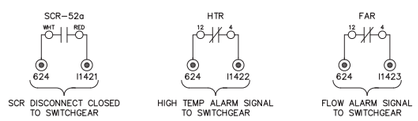

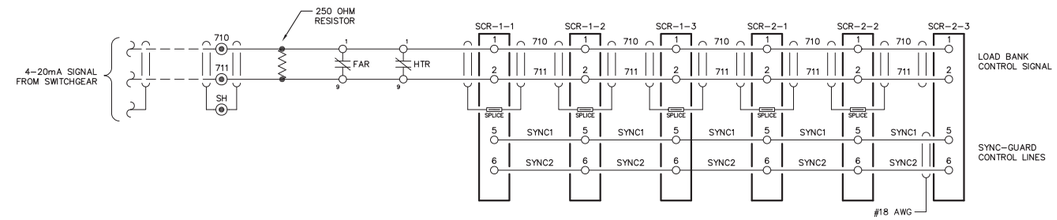

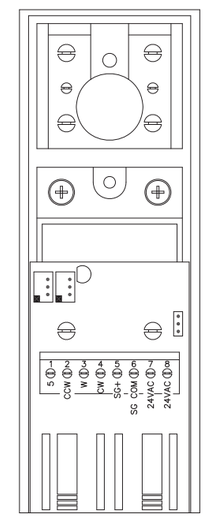

SCR DETAIL

NOTE:

1. FOR GENERAL WIRING & CONSTRUCTION NOTES, SEE DRAWING No. 7569-3101-D.

REV.	DATE	DESCRIPTION	BY
C	05-15-13	SHOP AS BUILT	GPN
B	04-03-13	REVISED PER REVIEW	GPN
A	03-25-13	SUBMITTAL	GPN

AEA PURCHASE ORDER No. 007750 — CONTROLLED POWER JOB No. 7760

TITLE: ELECTRIC BOILER PANEL DC CONTROL, SCHEMATIC DIAGRAM

SCALE: NONE	DATE: 03-19-13	DWN. BY: GPN
DWG. No: 7760-5321-D	SHEET: 1 OF 1	CKD. BY: JMD

JOB: ST GEORGE POWERHOUSE GENERATOR SWITCHGEAR

NOTICE
THE DRAWINGS, INFORMATION AND SUBJECT MATTER HEREOF ARE THE CONFIDENTIAL, SOLE AND EXCLUSIVE PROPERTY OF CONTROLLED POWER, INC., AND ARE NOT TO BE COPIED, REPRODUCED OR USED IN ANY MANNER FOR ANY PURPOSE WHATSOEVER WITHOUT WRITTEN CONSENT OR DIRECTION.

ALASKA ENERGY AUTHORITY
RURAL ENERGY GROUP
813 W. NORTHERN LIGHTS BLVD.
ANCHORAGE, ALASKA 99503
HTTP://WWW.AIDEA.ORG

Plot date: 2013/9/16 - 12:41

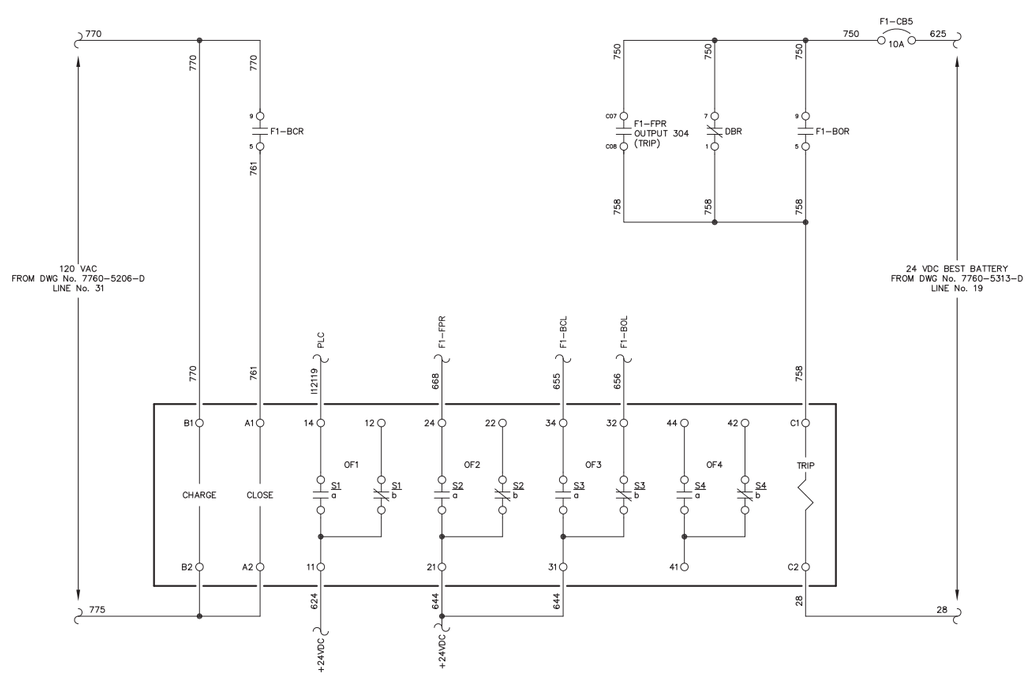

FEEDER 1 BREAKER
SQUARE D MASTERPACT NT

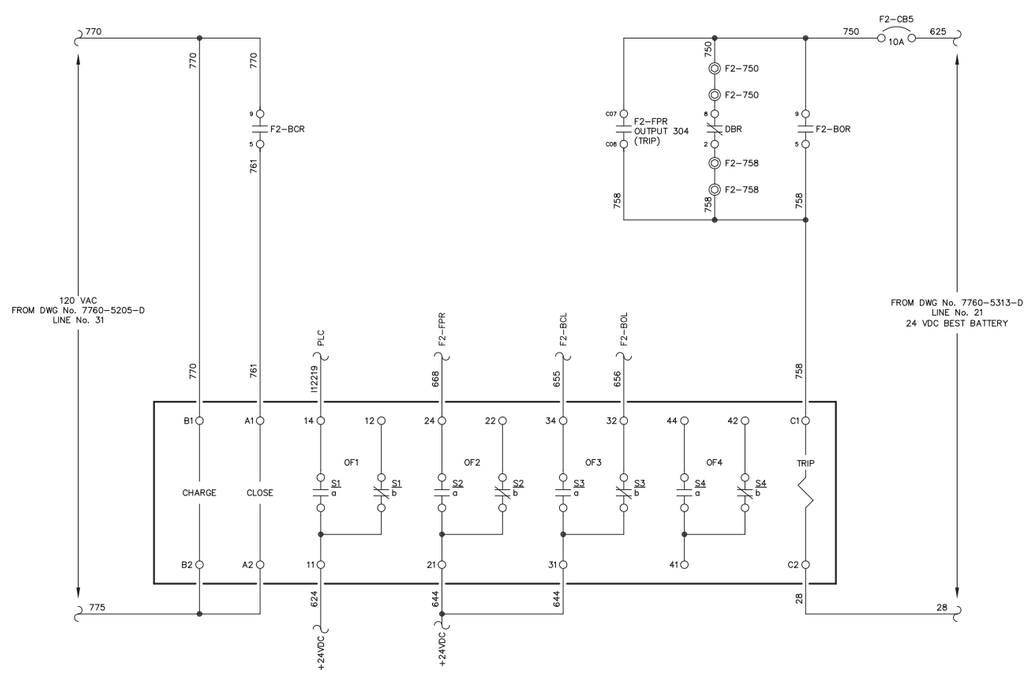

FEEDER 2 BREAKER
SQUARE D MASTERPACT NT

NOTE:

1. FOR GENERAL WIRING & CONSTRUCTION NOTES, SEE DRAWING No. 7760-3101-D.

REV.	DATE	DESCRIPTION	BY
C	05-15-13	SHOP AS BUILT	GPN
B	04-03-13	REVISED PER REVIEW	GPN
A	03-25-13	SUBMITTAL	GPN

AEA PURCHASE ORDER No. 007750 CONTROLLED POWER JOB No. 7760

TITLE: FEEDER BREAKER CONTROL, SCHEMATIC DIAGRAM

SCALE: NONE	DATE: 03-19-13	DWN. BY: GPN
DWG. No: 7760-5401-D	SHEET: 1 OF 1	CKD. BY: JMD

JOB: ST GEORGE POWERHOUSE GENERATOR SWITCHGEAR

NOTICE
THE DRAWINGS, INFORMATION AND SUBJECT MATTER HEREOF ARE THE CONFIDENTIAL, SOLE AND EXCLUSIVE PROPERTY OF CONTROLLED POWER, INC., AND ARE NOT TO BE COPIED, REPRODUCED OR USED IN ANY MANNER FOR ANY PURPOSE WHATSOEVER WITHOUT WRITTEN CONSENT OR DIRECTION.

ALASKA ENERGY AUTHORITY
RURAL ENERGY GROUP
813 W. NORTHERN LIGHTS BLVD.
ANCHORAGE, ALASKA 99503
HTTP://WWW.AIDEA.ORG

Plot date: 2013/9/16 – 12:41

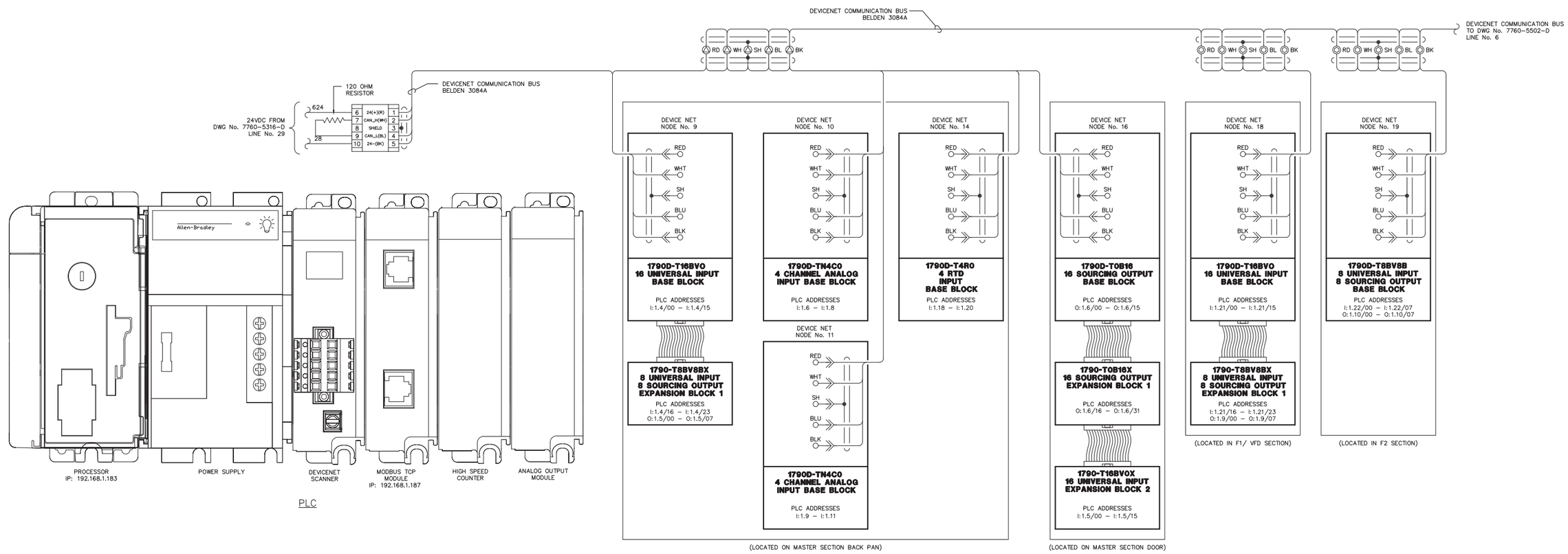

NOTE:

1. FOR GENERAL WIRING & CONSTRUCTION NOTES, SEE DRAWING No. 7760-3101-D.

REV.	DATE	DESCRIPTION	BY
C	05-15-13	SHOP AS BUILT	GPN
B	04-03-13	REVISED PER REVIEW	GPN
A	03-25-13	SUBMITTAL	GPN

AEA PURCHASE ORDER No. 007750 CONTROLLED POWER JOB No. 7760

TITLE: PLC COMMUNICATION, SCHEMATIC DIAGRAM

SCALE: NONE | DATE: 03-19-13 | DWN. BY: GPN

DWG. No: 7760-5501-D | SHEET: 1 OF 1 | CKD. BY: JMD

JOB: ST GEORGE POWERHOUSE GENERATOR SWITCHGEAR

NOTICE
THE DRAWINGS, INFORMATION AND SUBJECT MATTER HEREOF ARE THE CONFIDENTIAL, SOLE AND EXCLUSIVE PROPERTY OF CONTROLLED POWER, INC., AND ARE NOT TO BE COPIED, REPRODUCED OR USED IN ANY MANNER FOR ANY PURPOSE WHATSOEVER WITHOUT WRITTEN CONSENT OR DIRECTION.

ALASKA ENERGY AUTHORITY
RURAL ENERGY GROUP
813 W. NORTHERN LIGHTS BLVD.
ANCHORAGE, ALASKA 99503
HTTP://WWW.AIDEA.ORG

Plot date: 2013/9/16 – 12:41

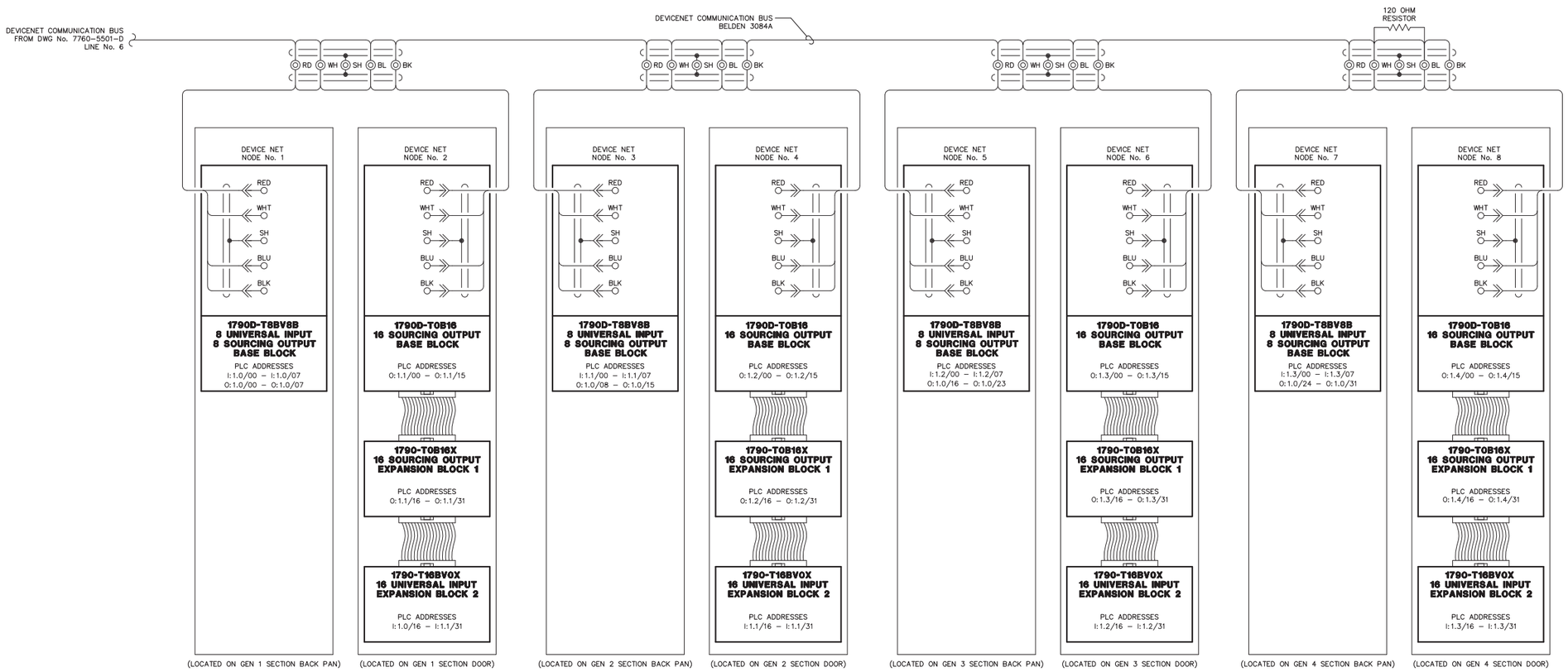

NOTE:

1. FOR GENERAL WIRING & CONSTRUCTION NOTES, SEE DRAWING No. 7760-3101-D.

REV.	DATE	DESCRIPTION	BY
C	05-15-13	SHOP AS BUILT	GPN
B	04-03-13	REVISED PER REVIEW	GPN
A	03-25-13	SUBMITTAL	GPN

AEA PURCHASE ORDER No. 007750 CONTROLLED POWER JOB No. 7760

TITLE: PLC COMMUNICATION, SCHEMATIC DIAGRAM

SCALE: NONE | DATE: 03-19-13 | DWN. BY: GPN

DWG. No: 7760-5502-D | SHEET: 1 OF 1 | CKD. BY: JMD

JOB: ST GEORGE POWERHOUSE GENERATOR SWITCHGEAR

NOTICE
THE DRAWINGS, INFORMATION AND SUBJECT MATTER HEREOF ARE THE CONFIDENTIAL, SOLE AND EXCLUSIVE PROPERTY OF CONTROLLED POWER, INC., AND ARE NOT TO BE COPIED, REPRODUCED OR USED IN ANY MANNER FOR ANY PURPOSE WHATSOEVER WITHOUT WRITTEN CONSENT OR DIRECTION.

ALASKA ENERGY AUTHORITY
RURAL ENERGY GROUP
813 W. NORTHERN LIGHTS BLVD.
ANCHORAGE, ALASKA 99503
HTTP://WWW.AIDEA.ORG

Plot date: 2013/9/16 – 12:40

DEVICE	IP ADDRESS
SERVER	192.168.1.142
F1-FPR	192.168.1.155
F2-FPR	192.168.1.156
R1 VFD	192.168.1.171
R2 VFD	192.168.1.172
R3 VFD	192.168.1.173
OIU	192.168.1.182
PLC CPU	192.168.1.183
GCP MGATE	192.168.1.186
PLC PROSOFT	192.168.1.187
BUS EPM	192.168.1.190
SS EPM	192.168.1.191
EB EPM	192.168.1.192

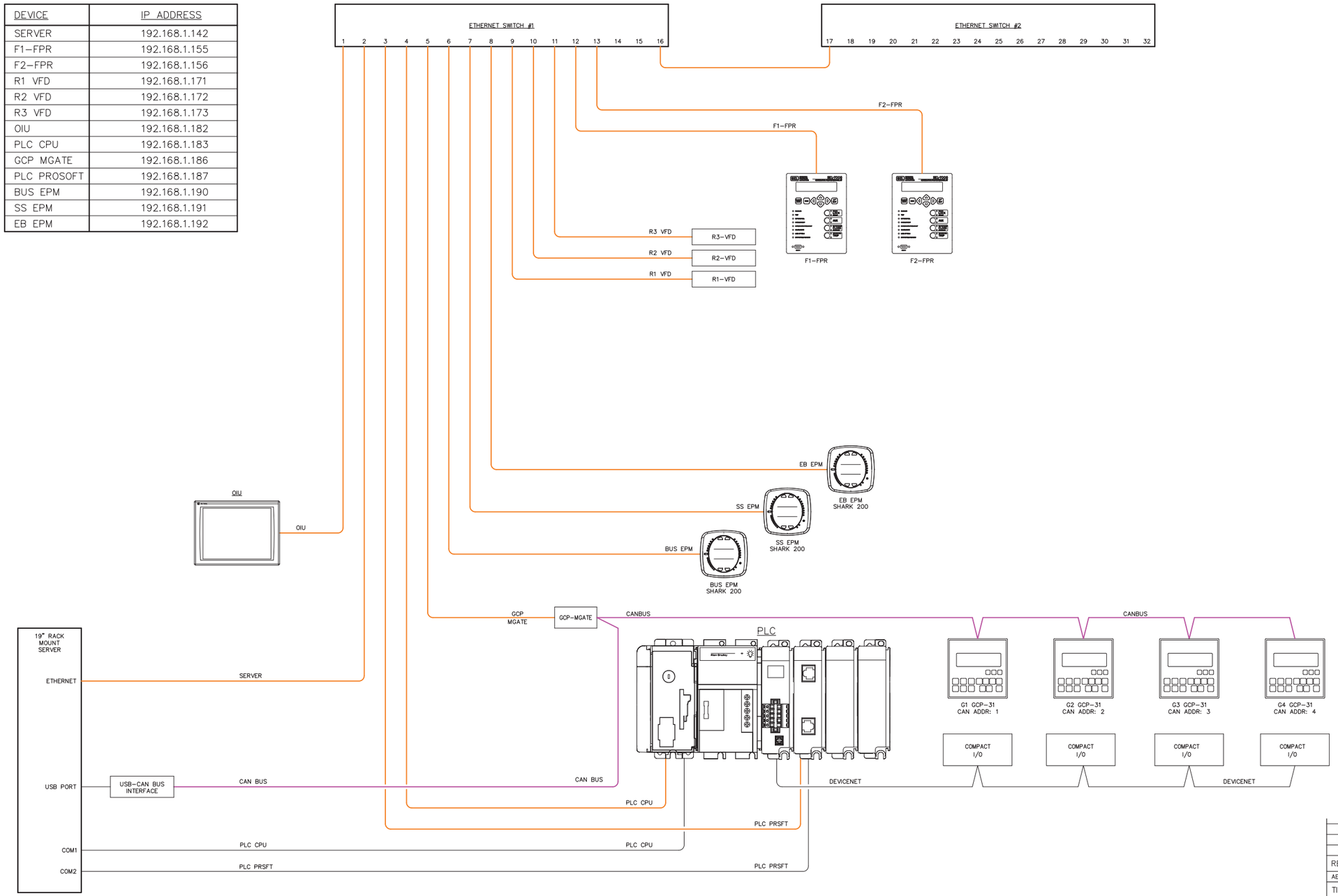

NOTE:

1. FOR GENERAL WIRING & CONSTRUCTION NOTES, SEE DRAWING No. 7760-3101-D.

REV.	DATE	DESCRIPTION	BY
C	05-15-13	SHOP AS BUILT	GPN
B	04-03-13	REVISED PER REVIEW	GPN
A	03-25-13	SUBMITTAL	GPN

AEA PURCHASE ORDER No. 007750 CONTROLLED POWER JOB No. 7760

TITLE: COMMUNICATION NETWORK DIAGRAM

SCALE: NONE | DATE: 03-19-13 | DWN. BY: GPN

DWG. No: 7760-5601-D | SHEET: 1 OF 1 | CKD. BY: JMD

JOB: ST GEORGE POWERHOUSE GENERATOR SWITCHGEAR

NOTICE
THE DRAWINGS, INFORMATION AND SUBJECT MATTER HEREOF ARE THE CONFIDENTIAL, SOLE AND EXCLUSIVE PROPERTY OF CONTROLLED POWER, INC., AND ARE NOT TO BE COPIED, REPRODUCED OR USED IN ANY MANNER FOR ANY PURPOSE WHATSOEVER WITHOUT WRITTEN CONSENT OR DIRECTION.

ALASKA ENERGY AUTHORITY
RURAL ENERGY GROUP
813 W. NORTHERN LIGHTS BLVD.
ANCHORAGE, ALASKA 99503
HTTP://WWW.AIDEA.ORG

Plot date: 2013/9/16 - 12:40

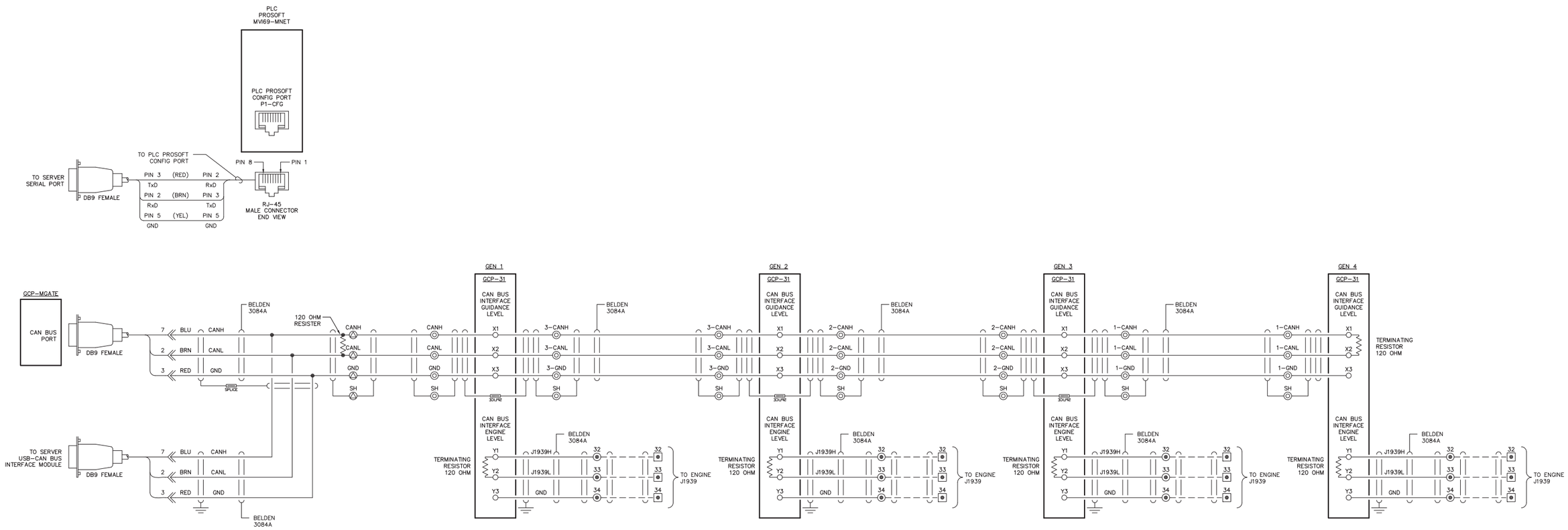

NOTE:

1. FOR GENERAL WIRING & CONSTRUCTION NOTES, SEE DRAWING No. 7760-3101-D.

REV.	DATE	DESCRIPTION	BY
C	05-15-13	SHOP AS BUILT	GPN
B	04-03-13	REVISED PER REVIEW	GPN
A	03-25-13	SUBMITTAL	GPN

AEA PURCHASE ORDER No. 007750 CONTROLLED POWER JOB No. 7760

TITLE: COMMUNICATION NETWORK DIAGRAM

SCALE: NONE	DATE: 03-19-13	DWN. BY: GPN
DWG. No: 7760-5602-D	SHEET: 1 OF 1	CKD. BY: JMD

JOB: ST GEORGE POWERHOUSE GENERATOR SWITCHGEAR

NOTICE
THE DRAWINGS, INFORMATION AND SUBJECT MATTER HEREOF ARE THE CONFIDENTIAL, SOLE AND EXCLUSIVE PROPERTY OF CONTROLLED POWER, INC., AND ARE NOT TO BE COPIED, REPRODUCED OR USED IN ANY MANNER FOR ANY PURPOSE WHATSOEVER WITHOUT WRITTEN CONSENT OR DIRECTION.

ALASKA ENERGY AUTHORITY
RURAL ENERGY GROUP
813 W. NORTHERN LIGHTS BLVD.
ANCHORAGE, ALASKA 99503
HTTP://WWW.AIDEA.ORG

Plot date: 2013/9/16 - 12:39

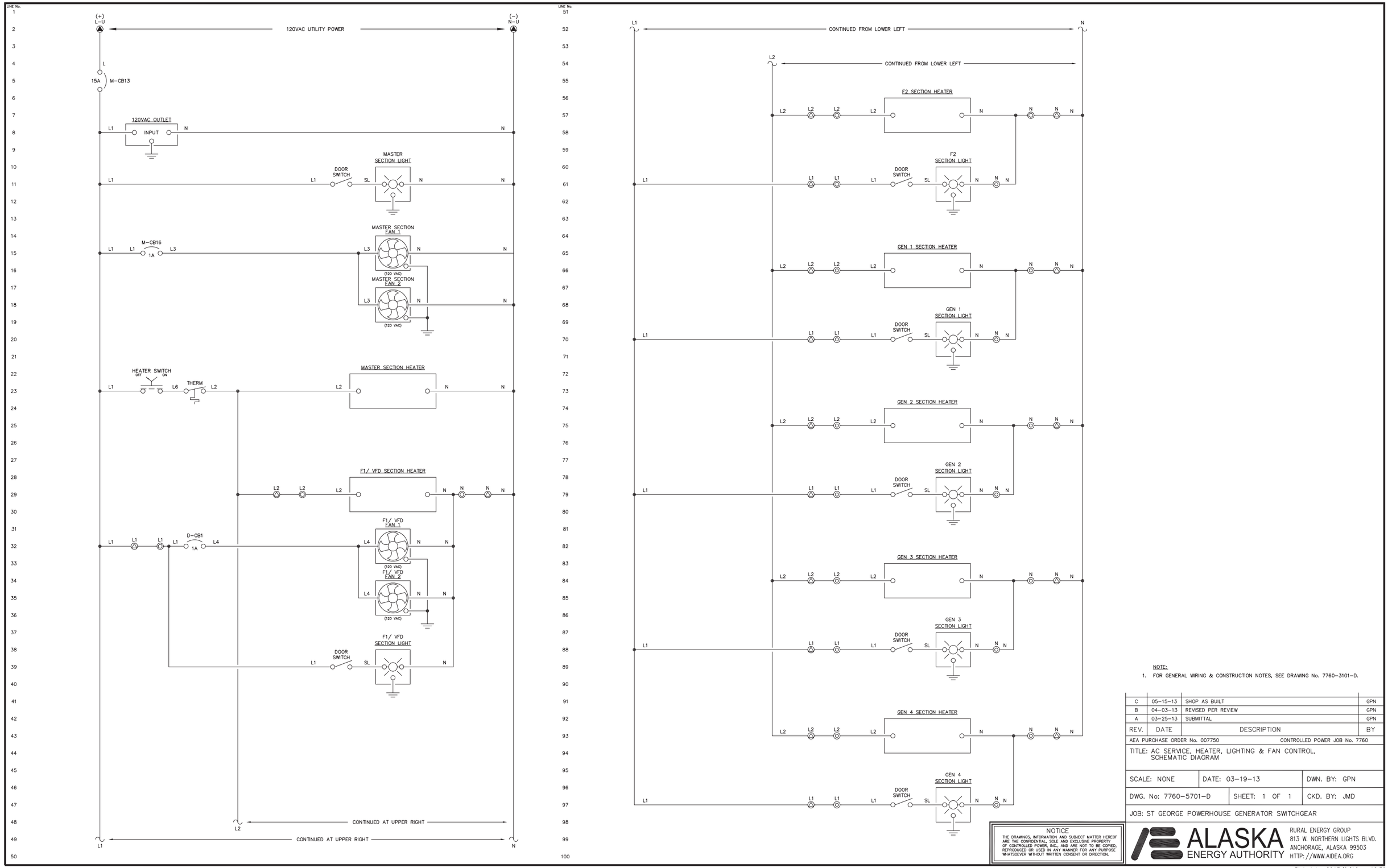

NOTE:

1. FOR GENERAL WIRING & CONSTRUCTION NOTES, SEE DRAWING No. 7760-3101-D.

REV.	DATE	DESCRIPTION	BY
C	05-15-13	SHOP AS BUILT	GPN
B	04-03-13	REVISED PER REVIEW	GPN
A	03-25-13	SUBMITTAL	GPN

AEA PURCHASE ORDER No. 007750 — CONTROLLED POWER JOB No. 7760

TITLE: AC SERVICE, HEATER, LIGHTING & FAN CONTROL, SCHEMATIC DIAGRAM

SCALE: NONE | DATE: 03-19-13 | DWN. BY: GPN

DWG. No: 7760-5701-D | SHEET: 1 OF 1 | CKD. BY: JMD

JOB: ST GEORGE POWERHOUSE GENERATOR SWITCHGEAR

NOTICE
THE DRAWINGS, INFORMATION AND SUBJECT MATTER HEREOF ARE THE CONFIDENTIAL, SOLE AND EXCLUSIVE PROPERTY OF CONTROLLED POWER, INC., AND ARE NOT TO BE COPIED, REPRODUCED OR USED IN ANY MANNER FOR ANY PURPOSE WHATSOEVER WITHOUT WRITTEN CONSENT OR DIRECTION.

ALASKA ENERGY AUTHORITY
RURAL ENERGY GROUP
813 W. NORTHERN LIGHTS BLVD.
ANCHORAGE, ALASKA 99503
HTTP://WWW.AIDEA.ORG

Plot date: 2013/9/16 - 12:39

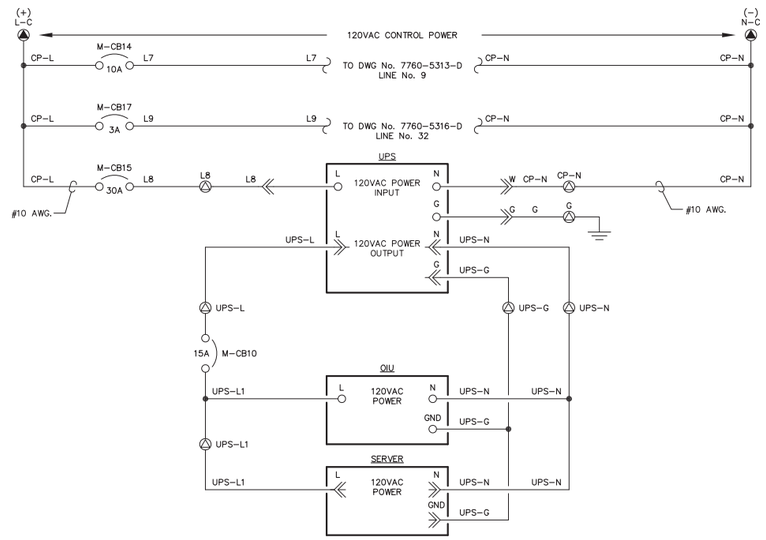

NOTE:

1. FOR GENERAL WIRING & CONSTRUCTION NOTES, SEE DRAWING No. 7760-3101-D.

REV.	DATE	DESCRIPTION	BY
C	05-15-13	SHOP AS BUILT	GPN
B	04-03-13	REVISED PER REVIEW	GPN
A	03-25-13	SUBMITTAL	GPN

AEA PURCHASE ORDER No. 007750 CONTROLLED POWER JOB No. 7760

TITLE: AC CONTROL POWER, SCHEMATIC DIAGRAM

SCALE: NONE	DATE: 03-19-13	DWN. BY: GPN
DWG. No: 7760-5702-D	SHEET: 1 OF 1	CKD. BY: JMD

JOB: ST GEORGE POWERHOUSE GENERATOR SWITCHGEAR

NOTICE
THE DRAWINGS, INFORMATION AND SUBJECT MATTER HEREOF ARE THE CONFIDENTIAL, SOLE AND EXCLUSIVE PROPERTY OF CONTROLLED POWER, INC., AND ARE NOT TO BE COPIED, REPRODUCED OR USED IN ANY MANNER FOR ANY PURPOSE WHATSOEVER WITHOUT WRITTEN CONSENT OR DIRECTION.

ALASKA ENERGY AUTHORITY
RURAL ENERGY GROUP
813 W. NORTHERN LIGHTS BLVD.
ANCHORAGE, ALASKA 99503
HTTP://WWW.AIDEA.ORG

Plot date: 2013/9/16 - 12:38

MASTER CONTROL SWITCH – MCS

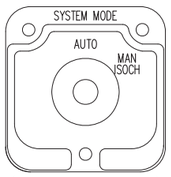

DECK	CONTACTS	POS. AUTO	POS. MAN ISOCH
1	11 – 12	X	
	13 – 12		X
	15 – 16	X	
	17 – 16		X
	18 – 14		

(ELECTROSWITCH 24201C)
KNURLED HANDLE
QTY 1

BREAKER CONTROL SWITCH – 52CS

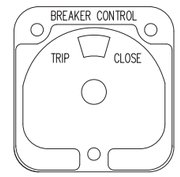

DECK	CONTACTS	POS. TRIP	POS. NORM	POS. CLOSE
1	11 – 18	X		
	16 – 17			X

(ELECTROSWITCH 2438D)
PISTOL GRIP HANDLE
SPRING RETURN TO CENTER
QTY 2

GENERATOR LOCKOUT SWITCH – GLS

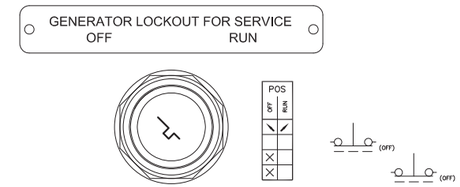

KEY OPERATED
2 POS MAINTAINED
QTY 4

HEATER CONTROL SWITCH – HCS

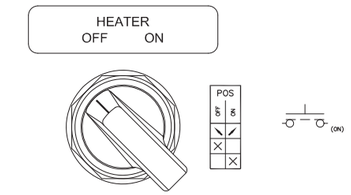

MAINTAINED
LOCATED ON MASTER
BACK PAN

VARIABLE FREQUENCY DRIVE MODE SWITCH – VFDMS

VFD OFF BYPASS

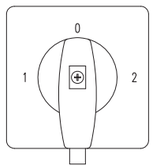

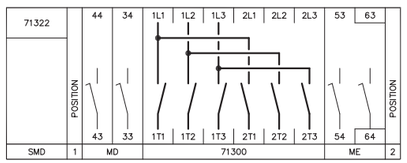

3 POS MAINTAINED
QTY 3

NOTE:
1. FOR GENERAL WIRING & CONSTRUCTION NOTES, SEE DRAWING No. 7760–3101–D.

REV.	DATE	DESCRIPTION	BY
C	05–15–13	SHOP AS BUILT	GPN
B	04–03–13	REVISED PER REVIEW	GPN
A	03–25–13	SUBMITTAL	GPN

AEA PURCHASE ORDER No. 007750 CONTROLLED POWER JOB No. 7760

TITLE: CONTROL SWITCH TARGET DIAGRAM

SCALE: NONE | DATE: 03–19–13 | DWN. BY: GPN

DWG. No: 7760–6101–D | SHEET: 1 OF 1 | CKD. BY: JMD

JOB: ST GEORGE POWERHOUSE GENERATOR SWITCHGEAR

NOTICE
THE DRAWINGS, INFORMATION AND SUBJECT MATTER HEREOF ARE THE CONFIDENTIAL, SOLE AND EXCLUSIVE PROPERTY OF CONTROLLED POWER, INC., AND ARE NOT TO BE COPIED, REPRODUCED OR USED IN ANY MANNER FOR ANY PURPOSE WHATSOEVER WITHOUT WRITTEN CONSENT OR DIRECTION.

ALASKA ENERGY AUTHORITY
RURAL ENERGY GROUP
813 W. NORTHERN LIGHTS BLVD.
ANCHORAGE, ALASKA 99503
HTTP://WWW.AIDEA.ORG

Plot date: 2013/9/16 – 12:37

8" × 4"
NP. TEXT 1/4" QUANTITY 1 SCALE 1/1
4 SEE NOTE 4

MANUFACTURED BY:
CONTROLLED POWER, INC.
17909 BOTHELL EVERETT HWY. S.E. #102
BOTHELL, WA. 98012
(425)-485-1778
SERIAL NUMBER: 7760

8" × 1"
NP. TEXT 1/2" QUANTITY 1 SCALE 1/1

MASTER CONTROL

8" × 1"
NP. TEXT 1/2" QUANTITY 1 SCALE 1/1

GENERATOR 1

8" × 1"
NP. TEXT 1/2" QUANTITY 1 SCALE 1/1

GENERATOR 2

8" × 1"
NP. TEXT 1/2" QUANTITY 1 SCALE 1/1

GENERATOR 3

8" × 1"
NP. TEXT 1/2" QUANTITY 1 SCALE 1/1

GENERATOR 4

8" × 1"
NP. TEXT 1/2" QUANTITY 1 SCALE 1/1

FEEDER 1/ VFD

8" × 1"
NP. TEXT 1/2" QUANTITY 1 SCALE 1/1

FEEDER 2

4" × 1"
NP. TEXT 1/2" QUANTITY 4 SCALE 1/1

210 KW

9" × 1"
NP. TEXT 1/2" QUANTITY 1 SCALE 1/1

BOILER SCR CONTROL

5" × 1"
NP. 13 TEXT 1/4" QUANTITY 1 SCALE 1/1

RADIATOR FAN 1

5" × 1"
NP. TEXT 1/4" QUANTITY 1 SCALE 1/1

RADIATOR FAN 2

5" × 1"
NP. TEXT 1/4" QUANTITY 1 SCALE 1/1

RADIATOR FAN 3

4" × 1/2"
NP. TEXT 1/8" QUANTITY 4 SCALE 1/1

GENERATOR LOCKOUT FOR SERVICE
OFF RUN

3" × 1/2"
NP. TEXT 3/16" QUANTITY 1 SCALE 1/1

GENERATOR 1

3" × 1/2"
NP. TEXT 3/16" QUANTITY 1 SCALE 1/1

GENERATOR 2

3" × 1/2"
NP. TEXT 3/16" QUANTITY 1 SCALE 1/1

GENERATOR 3

3" × 1/2"
NP. TEXT 3/16" QUANTITY 1 SCALE 1/1

GENERATOR 4

3" × 1/2"
NP. TEXT 3/16" QUANTITY 1 SCALE 1/1

FEEDER 1

3" × 1/2"
NP. TEXT 3/16" QUANTITY 1 SCALE 1/1

FEEDER 2

3" × 1/2"
NP. TEXT 3/16" QUANTITY 1 SCALE 1/1

STATION SERVICE

3" × 1/2"
NP. TEXT 3/16" QUANTITY 1 SCALE 1/1

ELECTRIC BOILER

3" × 1/2"
NP. TEXT 3/16" QUANTITY 1 SCALE 1/1

VFD MAIN

9" × 1/2"
NP. TEXT 1/8" QUANTITY 1 SCALE 1/1

LAMP TEST | EMERGENCY STOP | ALARM RESET

3" × 1/2"
NP. TEXT 1/8" QUANTITY 1 SCALE 1/1

BUS TOTALIZING

3" × 1/2"
NP. TEXT 1/8" QUANTITY 1 SCALE 1/1

STATION SERVICE

3" × 1/2"
NP. TEXT 1/8" QUANTITY 1 SCALE 1/1

ELECTRIC BOILER

3" × 1/2"
NP. TEXT 1/8" QUANTITY 1 SCALE 1/1

RADIATOR FAN 1
VFD OFF BYPASS

3" × 1/2"
NP. TEXT 1/8" QUANTITY 1 SCALE 1/1

RADIATOR FAN 2
VFD OFF BYPASS

3" × 1/2"
NP. TEXT 1/8" QUANTITY 1 SCALE 1/1

RADIATOR FAN 3
VFD OFF BYPASS

4" × 2"
NP. TEXT 1/8" QUANTITY 2 SCALE 1/1
4 SEE NOTE 4

MANUFACTURED BY:
CONTROLLED POWER, INC.
17909 BOTHELL EVERETT HWY. S.E. #102
BOTHELL, WA. 98012
(425)-485-1778
SERIAL NUMBER: 7760

2 1/2" × 1/2"
NP. TEXT 1/8" QUANTITY 1 SCALE 1/1

HEATER
OFF ON

NO MOUNTING HOLES

NOTES:

1. ALL NAMEPLATES SHALL BE BLACK FACE WITH WHITE LETTERS EXCEPT AS NOTED.
2. ALL NAMEPLATES SHALL HAVE PRESSURE SENSITIVE ADHESIVE ON BACK, 100 % COVERAGE.
3. ALL NAMEPLATES SHALL HAVE MOUNTING HOLES DRILLED AS INDICATED.
4. INDICATES THAT NAMEPLATE SHALL BE BRUSHED ALUMINUM WITH BLACK ENGRAVED LETTERS.

REV.	DATE	DESCRIPTION	BY
C	05-15-13	SHOP AS BUILT	GPN
B	04-03-13	REVISED PER REVIEW	GPN
A	03-25-13	SUBMITTAL	GPN

AEA PURCHASE ORDER No. 007750 CONTROLLED POWER JOB No. 7760

TITLE: NAMEPLATE ENGRAVING SCHEDULE, FABRICATION DIAGRAM

SCALE: NONE	DATE: 03-19-13	DWN. BY: GPN
DWG. No: 7760-6201-D	SHEET: 1 OF 1	CKD. BY: JMD

JOB: ST GEORGE POWERHOUSE GENERATOR SWITCHGEAR

NOTICE
THE DRAWINGS, INFORMATION AND SUBJECT MATTER HEREOF ARE THE CONFIDENTIAL, SOLE AND EXCLUSIVE PROPERTY OF CONTROLLED POWER, INC., AND ARE NOT TO BE COPIED, REPRODUCED OR USED IN ANY MANNER FOR ANY PURPOSE WHATSOEVER WITHOUT WRITTEN CONSENT OR DIRECTION.

ALASKA ENERGY AUTHORITY
RURAL ENERGY GROUP
813 W. NORTHERN LIGHTS BLVD.
ANCHORAGE, ALASKA 99503
HTTP://WWW.AIDEA.ORG

Plot date: 2013/9/16 – 12:37

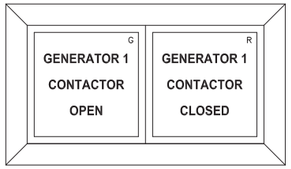

GEN 1 BREAKER ANNUNCIATOR
QTY 1

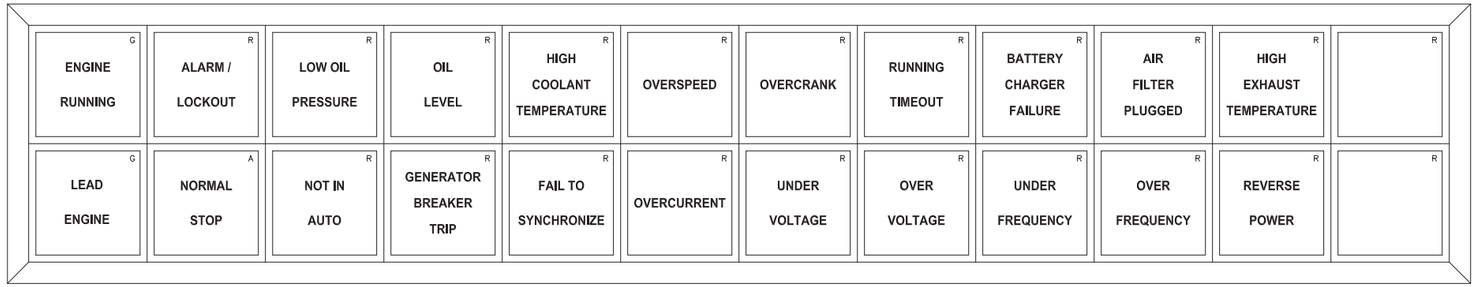

GENERATOR ANNUNCIATOR
QTY 4

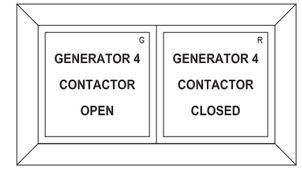

GEN 4 BREAKER ANNUNCIATOR
QTY 1

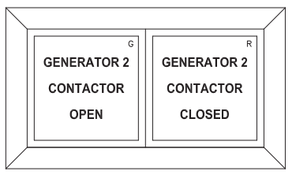

GEN 2 BREAKER ANNUNCIATOR
QTY 1

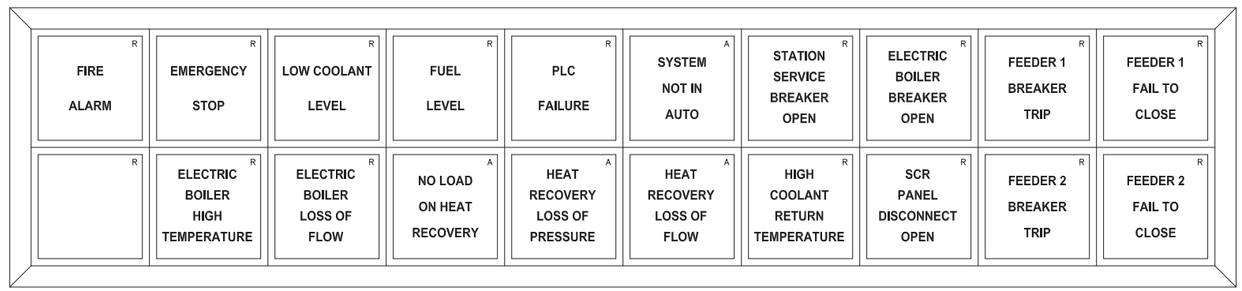

MASTER ANNUNCIATOR
QTY 1

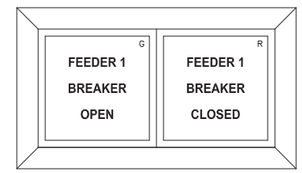

FEEDER 1 BREAKER ANNUNCIATOR
QTY 1

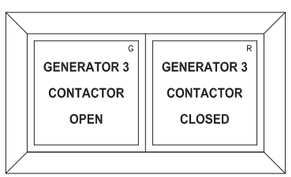

GEN 3 BREAKER ANNUNCIATOR
QTY 1

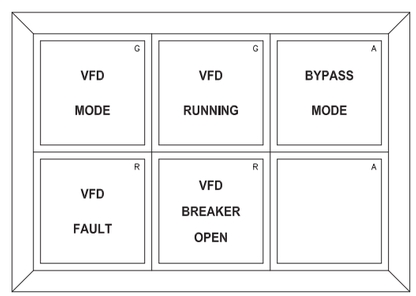

VFD ANNUNCIATOR
QTY 3

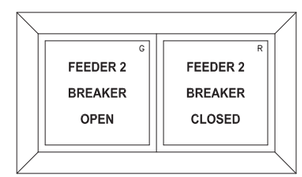

FEEDER 2 BREAKER ANNUNCIATOR
QTY 1

REV.	DATE	DESCRIPTION	BY
C	05-15-13	SHOP AS BUILT	GPN
B	04-03-13	REVISED PER REVIEW	GPN
A	03-25-13	SUBMITTAL	GPN

AEA PURCHASE ORDER No. 007750 CONTROLLED POWER JOB No. 7760

TITLE: ANNUNCIATOR WINDOWS, FABRICATION DIAGRAM

SCALE: NONE	DATE: 03-19-13	DWN. BY: GPN
DWG. No: 7760-6202-D	SHEET: 1 OF 1	CKD. BY: JMD

JOB: ST GEORGE POWERHOUSE GENERATOR SWITCHGEAR

NOTICE
THE DRAWINGS, INFORMATION AND SUBJECT MATTER HEREOF ARE THE CONFIDENTIAL, SOLE AND EXCLUSIVE PROPERTY OF CONTROLLED POWER, INC., AND ARE NOT TO BE COPIED, REPRODUCED OR USED IN ANY MANNER FOR ANY PURPOSE WHATSOEVER WITHOUT WRITTEN CONSENT OR DIRECTION.

ALASKA ENERGY AUTHORITY
RURAL ENERGY GROUP
813 W. NORTHERN LIGHTS BLVD.
ANCHORAGE, ALASKA 99503
HTTP://WWW.AIDEA.ORG

Plot date: 2013/9/16 – 12:36

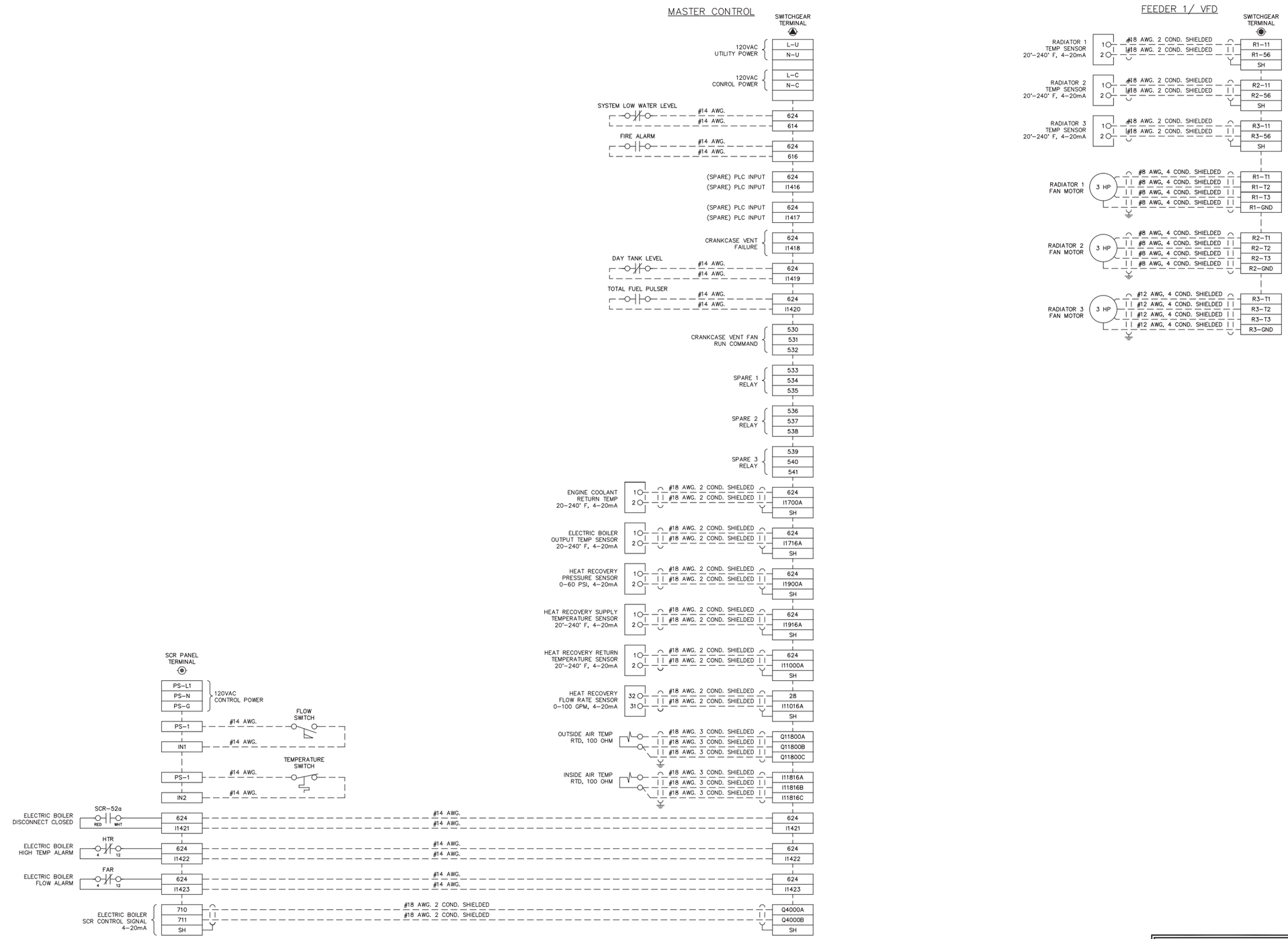

NOTE:

1. FOR GENERAL WIRING & CONSTRUCTION NOTES, SEE DRAWING No. 7760-3101-D.

REV.	DATE	DESCRIPTION	BY
C	05-15-13	SHOP AS BUILT	GPN
B	04-03-13	REVISED PER REVIEW	GPN
A	03-25-13	SUBMITTAL	GPN

AEA PURCHASE ORDER No. 007750 CONTROLLED POWER JOB No. 7760

TITLE: INTERCONNECTION DIAGRAM

SCALE: NONE | DATE: 03-19-13 | DWN. BY: GPN

DWG. No: 7760-7101-D | SHEET: 1 OF 1 | CKD. BY: JMD

JOB: ST GEORGE POWERHOUSE GENERATOR SWITCHGEAR

NOTICE
THE DRAWINGS, INFORMATION AND SUBJECT MATTER HEREOF ARE THE CONFIDENTIAL, SOLE AND EXCLUSIVE PROPERTY OF CONTROLLED POWER, INC., AND ARE NOT TO BE COPIED, REPRODUCED OR USED IN ANY MANNER FOR ANY PURPOSE WHATSOEVER WITHOUT WRITTEN CONSENT OR DIRECTION.

ALASKA ENERGY AUTHORITY
RURAL ENERGY GROUP
813 W. NORTHERN LIGHTS BLVD.
ANCHORAGE, ALASKA 99503
HTTP://WWW.AIDEA.ORG

Plot date: 2013/9/16 - 12:33

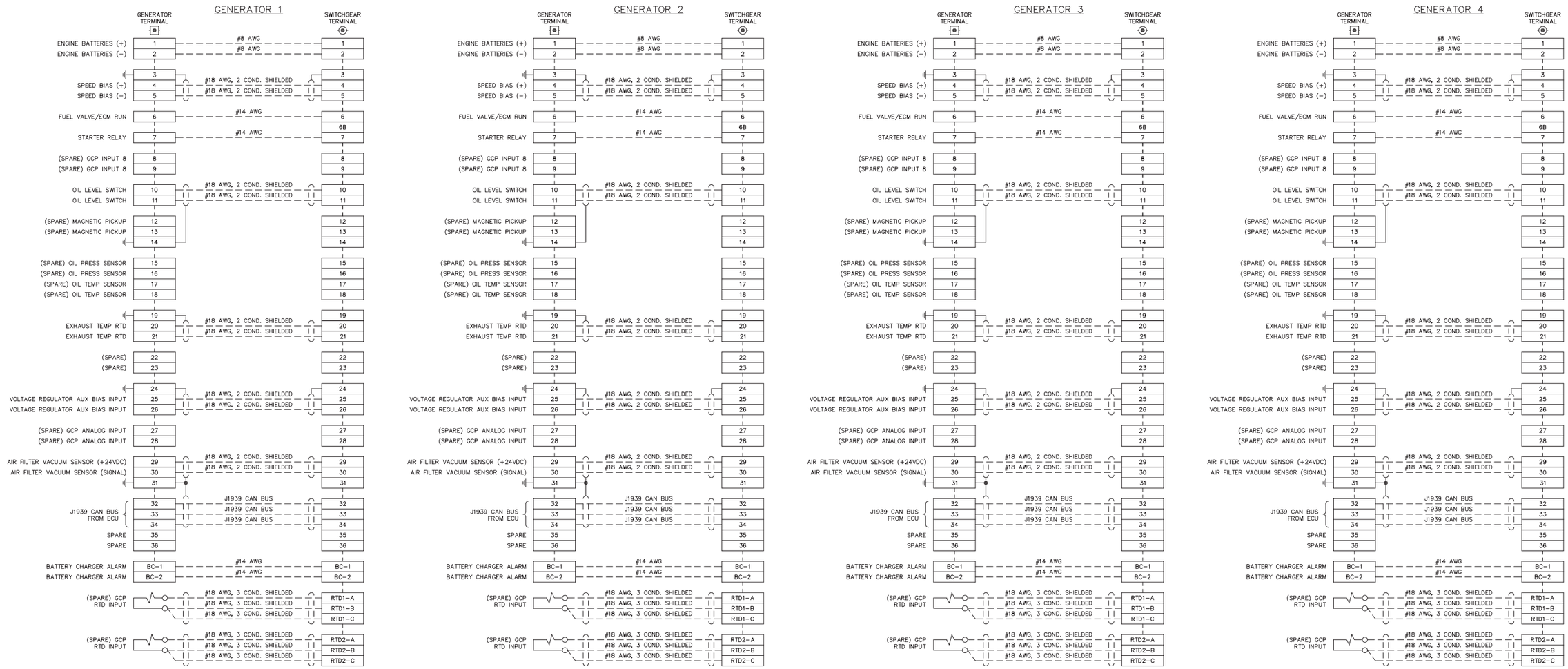

NOTE:

1. FOR GENERAL WIRING & CONSTRUCTION NOTES, SEE DRAWING No. 7760-3101-D.

REV.	DATE	DESCRIPTION	BY
C	05-15-13	SHOP AS BUILT	GPN
B	04-03-13	REVISED PER REVIEW	GPN
A	03-25-13	SUBMITTAL	GPN

AEA PURCHASE ORDER No. 007750 — CONTROLLED POWER JOB No. 7760

TITLE: INTERCONNECTION DIAGRAM

SCALE: NONE	DATE: 03-19-13	DWN. BY: GPN
DWG. No: 7760-7102-D	SHEET: 1 OF 1	CKD. BY: JMD

JOB: ST GEORGE POWERHOUSE GENERATOR SWITCHGEAR

NOTICE
THE DRAWINGS, INFORMATION AND SUBJECT MATTER HEREOF ARE THE CONFIDENTIAL, SOLE AND EXCLUSIVE PROPERTY OF CONTROLLED POWER, INC., AND ARE NOT TO BE COPIED, REPRODUCED OR USED IN ANY MANNER FOR ANY PURPOSE WHATSOEVER WITHOUT WRITTEN CONSENT OR DIRECTION.

ALASKA ENERGY AUTHORITY
RURAL ENERGY GROUP
813 W. NORTHERN LIGHTS BLVD.
ANCHORAGE, ALASKA 99503
HTTP://WWW.AIDEA.ORG

Plot date: 2013/9/16 – 12:55