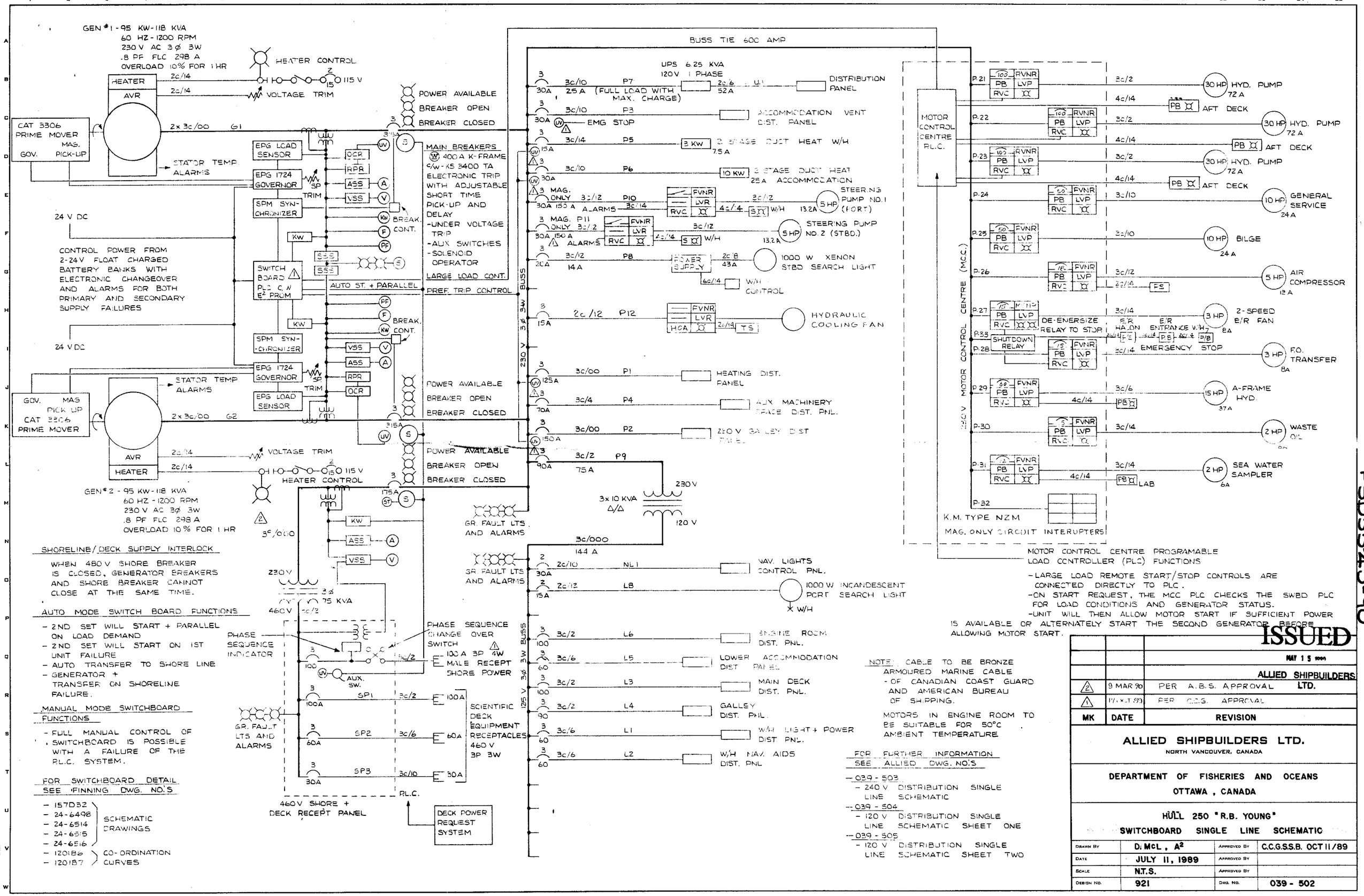
GEN #1 - 95 KW - 118 KVA
60 HZ - 1200 RPM
230 V AC 3 Ø 3W
.8 PF FLC 298 A
OVERLOAD 10% FOR 1 HR
HEATER CONTROL
HEATER
AVR
VOLTAGE TRIM
CAT 3306 PRIME MOVER
MAG. PICK-UP
GOV.
STATOR TEMP ALARMS
EPG LOAD SENSOR
EPG 1724 GOVERNOR
SPM SYN-CHRONIZER
24 V DC
CONTROL POWER FROM 2-24 V FLOAT CHARGED BATTERY BANKS WITH ELECTRONIC CHANGEOVER AND ALARMS FOR BOTH PRIMARY AND SECONDARY SUPPLY FAILURES
SWITCH BOARD PLC C/W E2 PROM
AUTO ST. + PARALLEL
BREAK. CONT.
POWER AVAILABLE
BREAKER OPEN
BREAKER CLOSED
MAIN BREAKERS
400 A K-FRAME C/W - KS 3400 TA ELECTRONIC TRIP WITH ADJUSTABLE SHORT TIME PICK-UP AND DELAY
-UNDER VOLTAGE TRIP
-AUX SWITCHES
-SOLENOID OPERATOR
LARGE LOAD CONT.
PREF. TRIP CONTROL
BUSS TIE 600 AMP
UPS 6.25 KVA 120 V 1 PHASE
DISTRIBUTION PANEL
ACCOMMODATION VENT DIST. PANEL
EMG STOP
2 STAGE DUCT HEAT W/H
2 STAGE DUCT HEAT ACCOMMODATION
STEERING PUMP NO. 1 (PORT)
STEERING PUMP NO. 2 (STBD.)
1000 W XENON STBD SEARCH LIGHT
HYDRAULIC COOLING FAN
HEATING DIST. PANEL
AUX MACHINERY SPACE DIST. PNL.
230 V 3Ø LEV DIST PANEL
3x 10 KVA Δ/Δ
GR. FAULT LTS AND ALARMS
NAV. LIGHTS CONTROL PNL.
1000 W INCANDESCENT PORT SEARCH LIGHT
ENGINE ROOM DIST. PNL.
LOWER ACCOMMODATION DIST PANEL
MAIN DECK DIST. PNL.
GALLEY DIST. PNL.
W/H LIGHT + POWER DIST. PNL.
W/H NAV. AIDS DIST. PNL
MOTOR CONTROL CENTRE R.L.C.
MOTOR CONTROL CENTRE (M.C.C.)
30 HP HYD. PUMP 72 A
AFT DECK
GENERAL SERVICE 24 A
BILGE 24 A
AIR COMPRESSOR 13 A
2-SPEED E/R FAN 8A
DE-ENERGIZE RELAY TO STOP
SHUTDOWN RELAY
EMERGENCY STOP
F.O. TRANSFER 8A
A-FRAME HYD. 37 A
WASTE OIL 6A
SEA WATER SAMPLER 6A
K.M. TYPE NZM
MAG. ONLY CIRCUIT INTERUPTERS
MOTOR CONTROL CENTRE PROGRAMABLE LOAD CONTROLLER (PLC) FUNCTIONS
-LARGE LOAD REMOTE START/STOP CONTROLS ARE CONNECTED DIRECTLY TO PLC.
-ON START REQUEST, THE MCC PLC CHECKS THE SWBD PLC FOR LOAD CONDITIONS AND GENERATOR STATUS.
-UNIT WILL THEN ALLOW MOTOR START IF SUFFICIENT POWER IS AVAILABLE OR ALTERNATELY START THE SECOND GENERATOR BEFORE ALLOWING MOTOR START.
GEN #2 - 95 KW - 118 KVA
60 HZ - 1200 RPM
230 V AC 3Ø 3W
.8 PF FLC 298 A
OVERLOAD 10% FOR 1 HR
SHORELINE/DECK SUPPLY INTERLOCK
WHEN 480 V SHORE BREAKER IS CLOSED, GENERATOR BREAKERS AND SHORE BREAKER CANNOT CLOSE AT THE SAME TIME.
AUTO MODE SWITCH BOARD FUNCTIONS
- 2ND SET WILL START + PARALLEL ON LOAD DEMAND
- 2ND SET WILL START ON 1ST UNIT FAILURE
- AUTO TRANSFER TO SHORE LINE
- GENERATOR + TRANSFER ON SHORELINE FAILURE.
MANUAL MODE SWITCHBOARD FUNCTIONS
- FULL MANUAL CONTROL OF SWITCHBOARD IS POSSIBLE WITH A FAILURE OF THE P.L.C. SYSTEM.
FOR SWITCHBOARD DETAIL SEE FINNING DWG. NO'S
- 157D32
- 24-6498
- 24-6514
- 24-6515
- 24-6516
SCHEMATIC DRAWINGS
- 120186
- 120187
CO-ORDINATION CURVES
PHASE SEQUENCE INDICATOR
PHASE SEQUENCE CHANGE OVER SWITCH
100 A 3P 4W MALE RECEPT SHORE POWER
SCIENTIFIC DECK EQUIPMENT RECEPTACLES 460 V 3P 3W
460 V SHORE + DECK RECEPT PANEL
P.L.C.
DECK POWER REQUEST SYSTEM
NOTE: CABLE TO BE BRONZE ARMOURED MARINE CABLE - OF CANADIAN COAST GUARD AND AMERICAN BUREAU OF SHIPPING.
MOTORS IN ENGINE ROOM TO BE SUITABLE FOR 50°C AMBIENT TEMPERATURE
FOR FURTHER INFORMATION SEE ALLIED DWG. NO'S
-039-503 - 240 V DISTRIBUTION SINGLE LINE SCHEMATIC
-039-504 - 120 V DISTRIBUTION SINGLE LINE SCHEMATIC SHEET ONE
-039-505 - 120 V DISTRIBUTION SINGLE LINE SCHEMATIC SHEET TWO
ISSUED
MAY 15 1990
ALLIED SHIPBUILDERS LTD.
MK DATE REVISION
9 MAR 90 PER A.B.S. APPROVAL
PER C.C.G. APPROVAL
ALLIED SHIPBUILDERS LTD.
NORTH VANCOUVER, CANADA
DEPARTMENT OF FISHERIES AND OCEANS
OTTAWA, CANADA
HULL 250 "R.B. YOUNG"
SWITCHBOARD SINGLE LINE SCHEMATIC
DRAWN BY D. McL, A2
APPROVED BY C.C.G.S.S.B. OCT 11/89
DATE JULY 11, 1989
SCALE N.T.S.
DESIGN NO. 921
DRG. NO. 039 - 502
PSD55-45-90