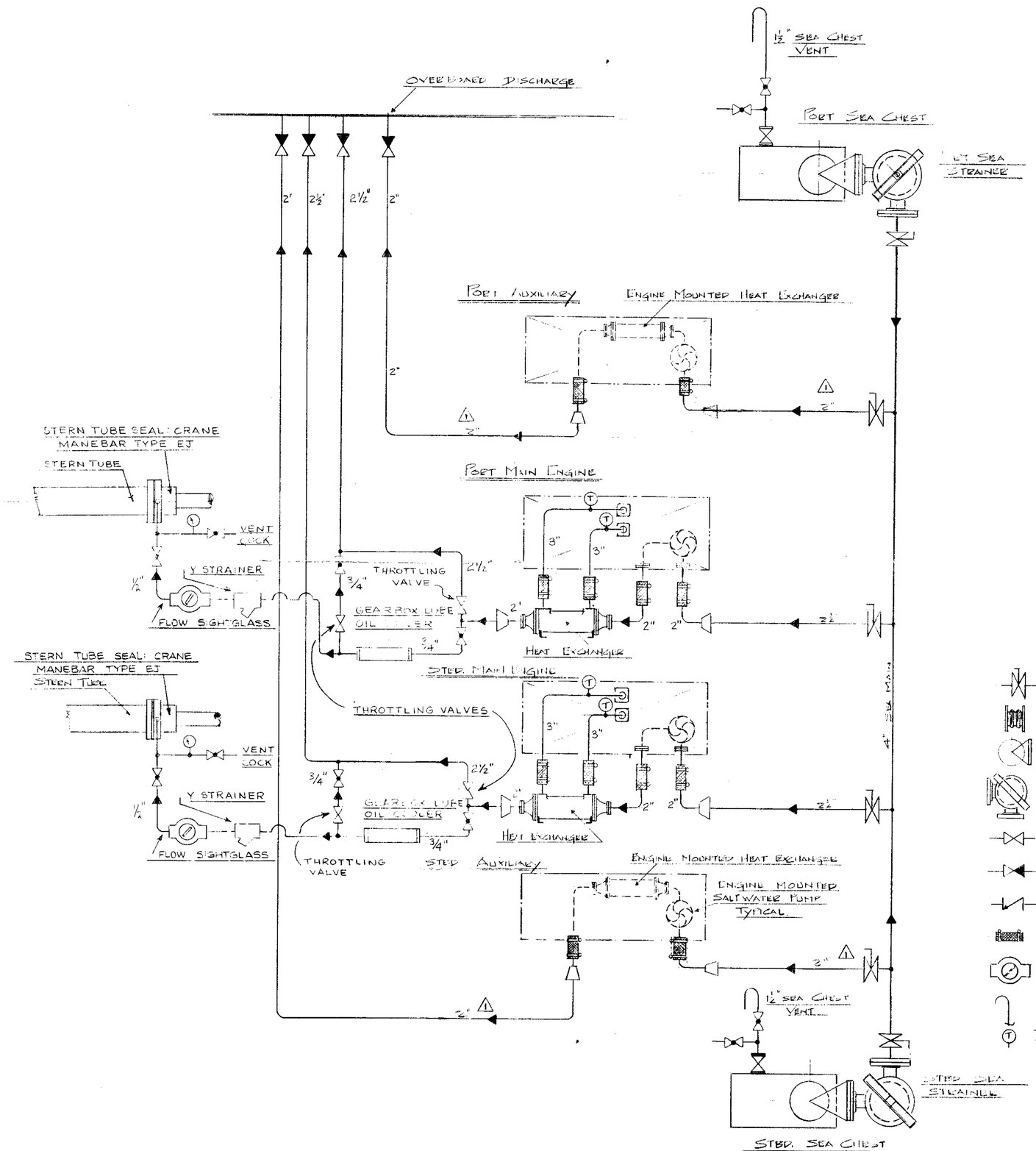

NOTES:

1. PIPE MATERIALS:
   - SEA MAIN - 90-10 COPPER NICKEL PIPE
   - ENGINE SALTWATER PIPE - 90-10 COPPER NICKEL PIPE.
   - ENGINE JACKET WATER PIPE - BLACK STEEL
   - REFERENCE: ALLIED SHIPBUILDERS LTD." PIPING STANDARDS
2. DIESEL PRIME MOVERS
   - MAIN ENGINE:
     - CATERPILLAR 3406 B ENGINE RATED AT 322 H.P. AT 1800 RPM.
   - AUXILIARY ENGINE:
     - CATERPILLAR 3306 ENGINE 95 kW AT 1200 RPM.

AS FITTED

KEY

- BUTTERFLY VALVE
- BELLOWS TYPE FLEXIBLE JOINT
- CAST IRON SEA VALVE
- ANGLE SEA STRAINER
- GLOBE VALVE
- GATE VALVE
- SWING CHECK VALVE
- FLEXIBLE HOSE
- FLOW SIGHT GLASS
- GOOSE NECK VENT
- TEMPERATURE GAUGE
- PIPE REDUCER
- ENGINE MOUNTED SALTWATER PUMP
- ENGINE MOUNTED HEAT EXCHANGER
- HEAT EXCHANGER

ISSUED
MAY 15 1989
ALLIED SHIPBUILDERS LTD.

NO.	DATE	REVISION
3	22 FEB 90	REVISE TO "AS FITTED" DRAWING
2	21 SEPT 1989	ENGINE OVERBOARDS REVISED
1	4 MAY 1989	SIZE REVISED 2½" → 2"

ALLIED SHIPBUILDERS LTD.
NORTH VANCOUVER, CANADA

DEPARTMENT OF FISHERIES AND OCEANS
OTTAWA, CANADA

HULL 250 "R.B. YOUNG"
ENGINE COOLING SCHEMATIC

DRAWN BY	C. K.	APPROVED BY	
DATE	APRIL 17, 1989	APPROVED BY	
SCALE	N.T.S.	APPROVED BY	
DESIGN NO.	921	DRG. NO.	039-202

PSD55-23-90