TRANSDUCER INSTALLATION MANUAL

wassp MULTIBEAM

SEE IT ALL

WASSP TRANSDUCER INSTALLATION MANUAL

This installation manual covers the installation recommendations for the WASSP 160kHz and WASSP 80kHz transducers.

This manual does not cover installation and setup of any associated WASSP system components.

DOCUMENT REVISION HISTORY

REVISION DATE	REASON FOR CHANGE	VERSION
April 2016	Compilation	1.0

RELATED DOCUMENTS

- WMB-X230 Installation Manual
- WMB-3250 Installation Manual
- WASSP DRX Installation Manual

Further documentation and updated specifications and installation manuals can be found at wassp.com

GENERAL NOTICES

WASSP Ltd. reserves the right to change the contents of this manual and any system specifications without notice.

Contact WASSP Ltd. regarding copying or reproducing this manual.

SAFETY NOTICES

The installer of the equipment is solely responsible for the correct installation of the equipment. WASSP Ltd. holds no responsibility for any damage associated with incorrect installation.

SUPPORT INFORMATION

For details on Registration, Support and Resources *see "7 Product Registration, Support and Resources" on page 21*

WARNINGS, CAUTIONS AND NOTES

Warnings, cautions, and notes are indicated by the following icons throughout this manual

WARNING indicates that if the instruction is not heeded, the action may result in loss of life or serious injury.

CAUTION indicates that if the instruction is not heeded, the action may result in equipment damage or software corruption.

NOTE indicates a TIP or additional information that can be helpful while performing a procedure

CONTENTS

1 Introduction **5**
2 Transducer Dimensions **6**
2.1. 160kHz Transducer 6
2.2. 80kHz Transducer 7
3 Transducer Mounting Methods **8**
3.1. Through Hull Mounting 8
3.2. Pole Mounting 9
4 General Considerations **10**
5 Assemblies **12**
5.1. Gland Assembly 12
5.2. Mounting the Cable Gland 12
5.3 cable Installation 14
5.3.1. Replacing / Repairing an RJ-45 Connector15
6 Mounting Assembly **16**
6.1. 160kHz Transducer Mounting 16
6.2. 80kHz Transducer Mounting Assembly 18
7 Product Registration, Support and Resources **21**

FIGURES

Figure 1. 160kHz Transducer Dimensions 6
Figure 2. 80kHz Transducer Dimensions 7
Figure 3. Through Hull Transducer Mounting 8
Figure 4. Placing the Transducer on the Keel 8
Figure 5. Pole Transducer Mounting 9
Figure 6. Transducer mounting locations for larger displacement hulls 11
Figure 7. Alloy / Plastic Gland Assembly Outline and Dimensions 12
Figure 8. Mounting the Gland Assembly 13
Figure 9. Gland Assembly - Cable Connectors 14

1 INTRODUCTION

The WASSP system uses a transducer intended to be either pole mounted or flush mounted inside the hull through a suitable opening to allow the bottom face of the transducer to be in contact with the sea water.

The transducer is a rectangular-shaped, low-profile transducer for through-hull mounting encased in a sealed sea chest made to suit the vessel's hull dead rise angle. Finite measurements and fabrication should be based on the physical transducer to allow for manufacturing tolerances.

A sea chest for housing and sealing the transducer should be designed and constructed by a reputable shipyard to suit the size and contours of the hull of each individual vessel. This must be sized and constructed accurately.

The sea chest provides a stable platform for the transducer and must be mounted as horizontal to the vessel's waterline as possible. An optional gland supplied by WASSP Ltd. in alloy, plastic, or steel, provides the transducer cable through-hull seal.

The transducer is supplied standard with a 10m cable. Different cable lengths are available. Please ask your WASSP representative for details.

2 TRANSDUCER DIMENSIONS

The following drawings give the overall dimensions of the two types of WASSP Transducer. The recommended cut-out dimensions for a mounting plate are also shown.

2.1. 160KHZ TRANSDUCER

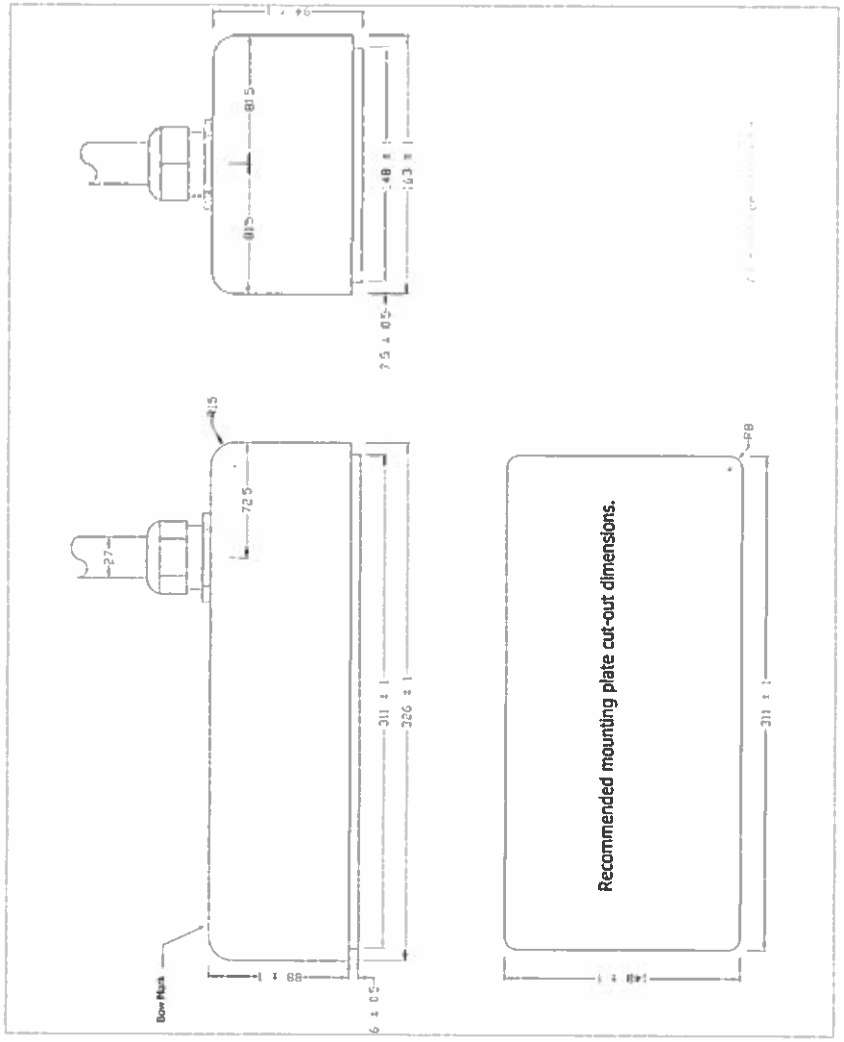

Figure 1. 160kHz Transducer Dimensions

2.2. 80KHZ TRANSDUCER

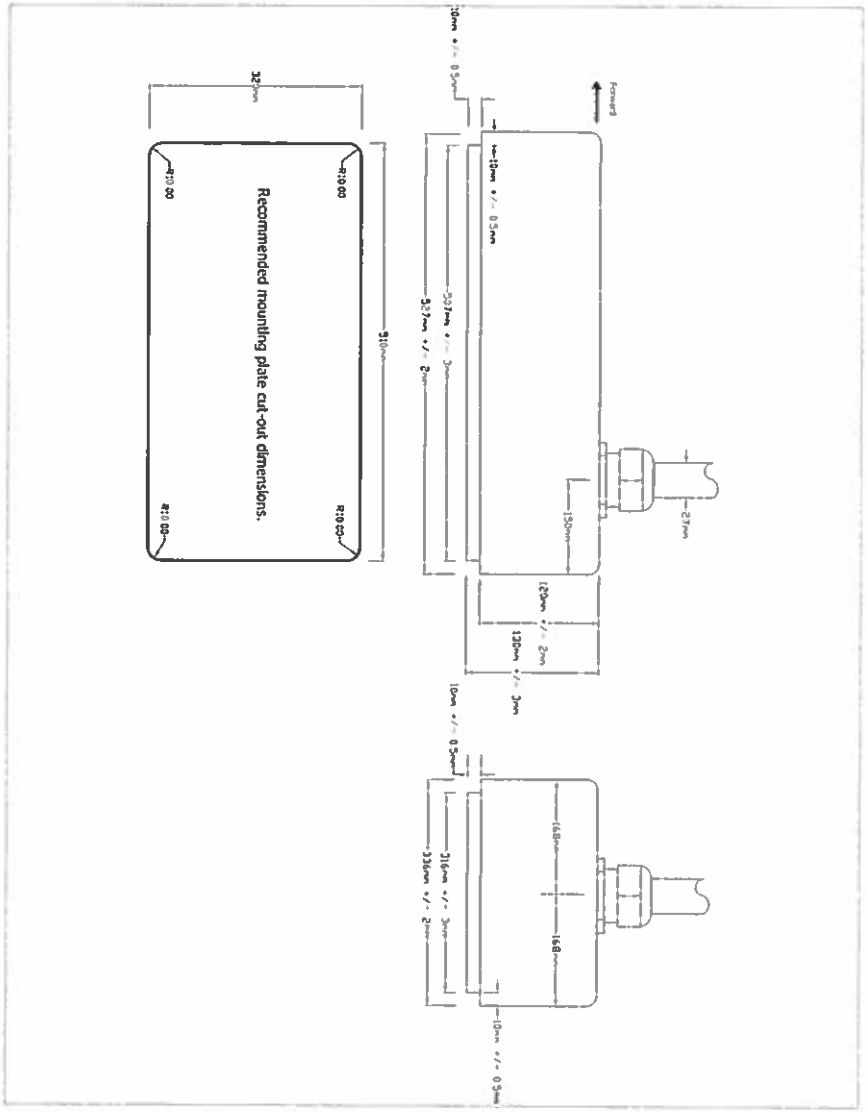

Figure 2 80kHz Transducer Dimensions

3 TRANSDUCER MOUNTING METHODS

3.1. THROUGH HULL MOUNTING

When mounting the transducer, ensure it is accurately running parallel to the keel in a bow-stern direction. See below.

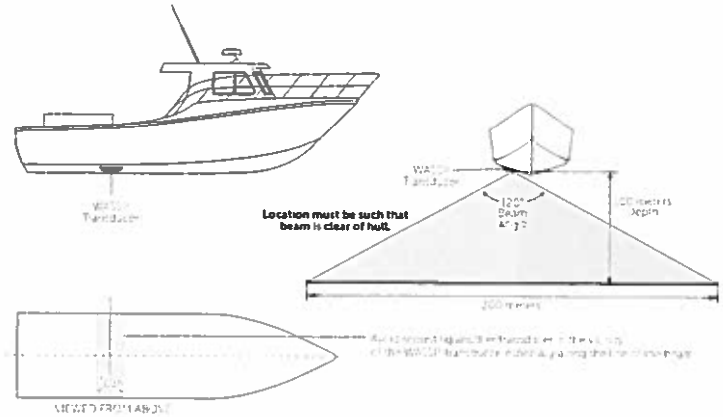

Figure 3. Through Hull Transducer Mounting

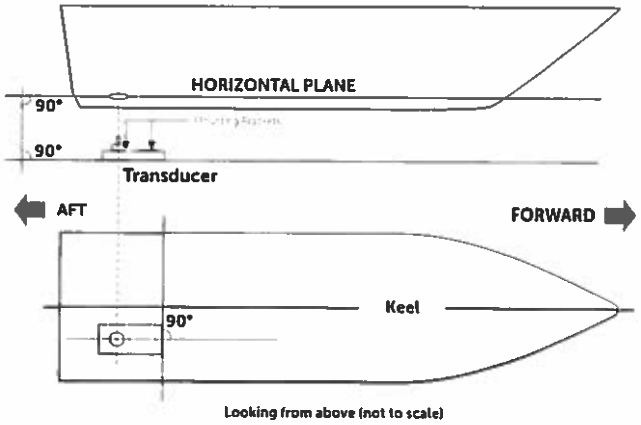

Figure 4. Placing the Transducer on the Keel

CAUTION: The above mounting example is provided as a guide. WASSP Ltd. recommend that a reputable boat builder is used to install the transducer to prevent damage to the vessel's hull.

3.2. POLE MOUNTING

The transducer can be used with a temporary mounting assembly. The assembly would typically incorporate transducer, and a position and motion sensor, and be deployed on a rigid mount over the side or the stern of the vessel such that it can be raised / lowered when required.

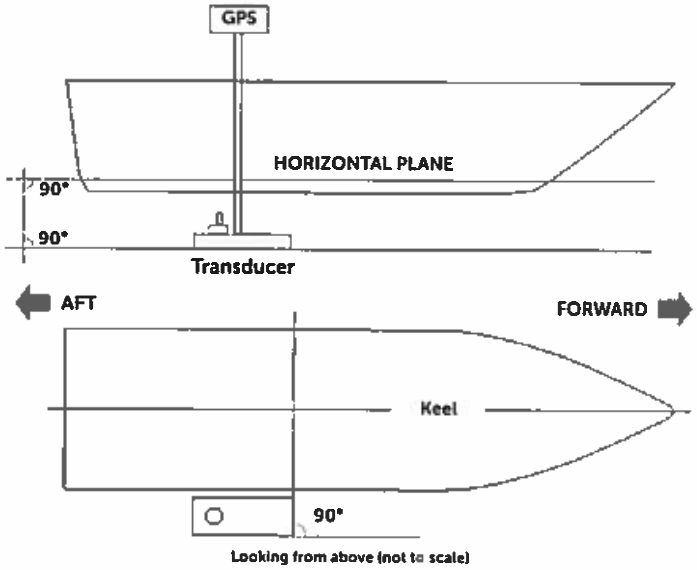

Figure 5. Pole Transducer Mounting

CAUTION: The above mounting example is provided as a guide. WASSP Ltd. recommend that a reputable boat builder is used to fabricate the pole mount assembly.
Any flex in the pole mount during operation will introduce errors.

4 GENERAL CONSIDERATIONS

The transducer is mounted on the hull below the water line, normally using a permanent sea chest. The transducer must be mounted so that it is aligned with the fore-aft axis of the vessel. It must also be mounted so that the flat underside of the transducer is as close to horizontal as possible

If the vessel has a keel, the transducer can be mounted somewhere along the length of it. If it is mounted on the hull, it should be far enough away from the keel so that the keel will not be detected within the 120° beam angle. Figure 6 on page 8 shows a sea chest type through-hull mounting designed specifically for a fast moving, alloy hull crayfish boat.

The performance of the system is directly related to the mounting location of the transducer, especially for high-speed cruising. The installation should be planned in advance, keeping in mind the fixed cable length of your transducer (5m / 10m / 20m) and the following factors.

- Air bubbles and turbulence caused by movement of the vessel seriously degrade the sounding capability of the transducer. The transducer should be located in a position with the smoothest water flow
- The transducer should not be mounted close to propellers because noise from propellers can adversely affect the performance of the transducer
- Mount the transducer inboard of lifting strakes as these create acoustic noise
- The transducer must always remain submerged, even when the boat is rolling, pitching or planing at high speed.
- A practical choice would be somewhere between a 1/3 and a 1/2 of the boat's length from the stern. For planing hulls, a practical location is generally towards the rear of the vessel, to ensure that the transducer is always submerged, regardless of the planing angle
- Do not mount another transducer near the WASSP transducer as it will interfere with the 120° beam

Planing hulls

On planing hulls the transducer obviously needs to be mounted in or on the aft part of the hull, which stays in the water when the vessel is on the plane

The transducer can be mounted either in a streamlined housing or blister on the hull or inside the hull in a specially prepared cofferdam, with the transducer face flush with the hull and faired to the hull shape

It is important that the part of the hull in front of the transducer is smooth and has no hull penetrations or attachments of any kind.

Displacement hulls

A practical choice is somewhere in the area between a ⅓ and a ½ of the vessel's length, from the bow. The transducer should be mounted in a housing or blister attached to the hull

The disturbed aerated water tends to be in a layer against the hull, it's thickness varies by

vessel's speed and sea conditions. Therefore the deeper the housing is, i.e. the further the transducer is away from the hull, the better the equipment will perform. Also on V-shaped hulls the housing should be mounted against or close to the keel, again to get deeper and away from aeration and turbulence. The 120 degree athwart ship pattern must be kept in mind when mounting the transducer. No part of the keel or hull should protrude into this pattern.

Larger displacement hulls with bow thruster

The best location on these vessels is in or against the keel, forward of a line just aft of the thruster cavity. Locations further aft are becoming heavily affected by aeration when the vessel pitches and air exhausts out of the thruster tunnel on the downward movement of the bow. This air creates havoc with the performance of any transducers further aft on the hull. "Figure 6. Transducer mounting locations for larger displacement hulls" suggest mounting locations for these types of vessels.

In these installations, the strength of the mounting becomes very important, as the transducer can be out of the water when the vessel pitches. Re-entry into the water exerts large forces on the transducer face and the mounting structure.

See "6.1. 160kHz Transducer Mounting" on page 16 and "6.2. 80kHz Transducer Mounting Assembly" on page 18 for mounting diagrams and instructions. These steps must be carried out accurately and completely

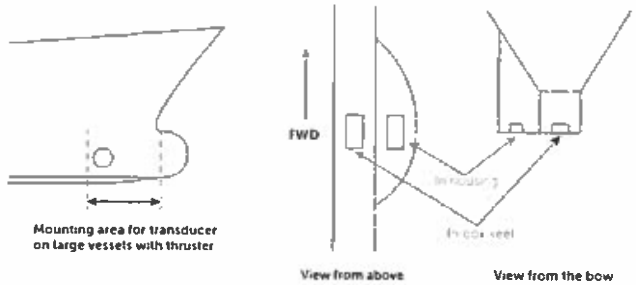

Figure 6. Transducer mounting locations for larger displacement hulls

CAUTION: Please see "6.2. 80kHz Transducer Mounting Assembly" on page 18. In particular pay attention to the torque tension of the mounting nuts and the requirement to fill any gaps that exist between the transducer body and the retaining with epoxy

5 ASSEMBLIES

5.1. GLAND ASSEMBLY

"Figure 7. Placing the Transducer on the Keel" shows the physical dimensions of the WASSP Ltd. supplied alloy / plastic gland assembly. The steel gland is different to below

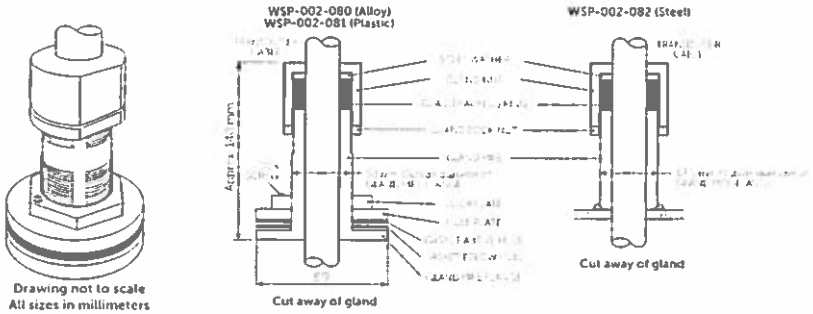

Figure 7 Alloy / Plastic Gland Assembly Outline and Dimensions

5.2. MOUNTING THE CABLE GLAND

See "Figure 8. Mounting the Gland Assembly" on page 13 and "Figure 9. Gland Assembly - Cable Connectors" on page 14.

In the external sea chest and fairing type installations, the cable gland forms a seal where the transducer cable passes through the hull. In low profile sea chest installations, the gland passes through the sea chest cover.

The gland pipe and a single gasket are the only parts of the gland that are located inside the sea chest or outside the hull, all other parts are attached to the gland pipe inside the vessel.

Gland Mounting Instructions

Depending on the type of installation, there are various ways of mounting the cable gland to the hull. The following example describes how to mount the gland through the hull and then feed the cable through the gland. Adapt the following procedure to suit your installation while taking the following into consideration

- Always use a good quality marine sealant to seal across areas that can leak.
- When installing the gland packing ring, apply soapy water to the inside of the packing ring and pass it over the transducer cable until it is sitting on top of the gland pipe. The soapy water allows the packing ring to slide easily down the cable. When sitting on top of the gland pipe, clean as much of the soapy water off as possible to ensure the packing ring grips the cable when pressure is applied by the gland nut.
- Tighten the gland nut by hand until secure. With the vessel in the water, check for leaks at the gland and if leaking slightly, tighten the gland nut with a spanner until the leak stops.

- When all leaks are stopped, tighten the gland lock nut against the gland nut.

1	Place the bottom gasket over the gland pipe and apply marine sealant to both sides of the gasket. See Figure 11 below
2	Push the gland pipe into the hole
3	Place the top gasket over the gland pipe and apply marine sealant to both sides of the gasket.
4	Place the plate over the gland pipe and onto the top gasket.
5	Screw the lock plate onto the gland pipe until a good joint is achieved. Clean away any excess marine sealant.
6	Feed the transducer cable through the gland. See "Figure 12. Gland Assembly - Cable Connectors" on page 14 for a set of steps to feed a RJ-45 type cable through the gland pipe.
7	Screw the gland lock nut as far as it can go onto the gland pipe.
8	Place the gland packing ring over the cable until it sits on top of the gland pipe
9	Place the steel washer and gland nut over the cable and screw the nut onto the gland pipe firmly by hand.
10	With the vessel in the water, check for leaks at the gland and if leaking slightly, tighten the gland nut with a spanner until the leak stops.
11	With all leaks stopped and while holding the gland nut with a spanner, tighten the gland lock nut against the gland nut with a spanner.

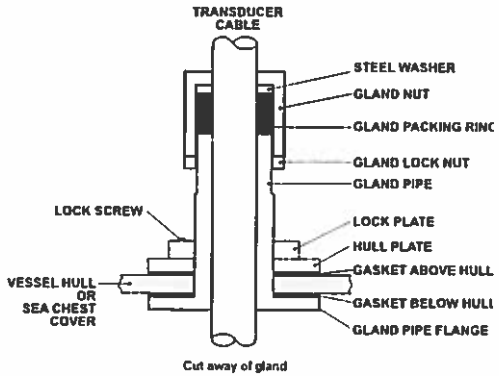

Figure 8 Mounting the Gland Assembly

5.3. CABLE INSTALLATION

The transducer cable consists of seven CAT-5 cables and one screened pair for the transmit connection.

To fit the RJ-45 connectors and cable through the gland, no special preparation is required.

The WASSP transceiver cable end has the RJ-45 connectors fitted with "staggered" cable lengths. This allows each RJ-45 connector and its associated cable to be fed through the gland fitting easily

Commencing with the black RJ-45 cable and black transmit cable, feed each cable in turn through the gland, finishing off with the grey RJ-45 connector and cable

Complete fitting and tightening the gland as shown in "Figure 8. Mounting the Gland Assembly" on page 13

NOTE Colour code for transmit cable conductors White, Black and Green

CAUTION DO NOT STRAIN THE TRANSDUCER CABLE!

Forcing the cable to bend, twist, or stretch beyond its means will damage the transducer and impair performance

Once the transducer has been installed, ensure that the transducer cable is not under tension. Use cable ties for similar) to secure the cable as necessary

Figure 9 Gland Assembly - Cable Connectors

5.3.1. Replacing / Repairing an RJ-45 Connector

If one or more of the RJ-45 connectors gets damaged during the installation process, the connector can be easily replaced. Wiring details and colour codes used are shown below.

The CAT5E cables used in the transducer cable follow standard CAT5 colour codes but the RJ-45 plug wiring is specific to the WASSP transceiver and does NOT conform to T568A or B

RJ-45 Plug Pin Number	CAT 5 conductor colour
1	Orange
2	Orange / White
3	Green
4	Green / White
5	Blue
6	Blue / White
7	Brown
8	Brown / White
Case	Screen / drain wire (soldered)

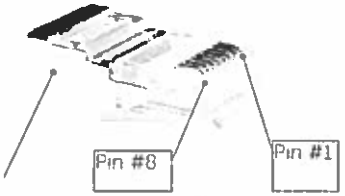

The screen / drain wire should be soldered onto the side of the RJ-45 connector. Scratch the side of the connector with something sharp before soldering to assist with the join.

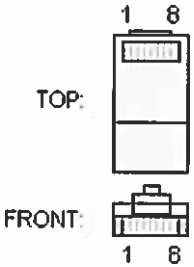

6 MOUNTING ASSEMBLY

6.1. 160KHZ TRANSDUCER MOUNTING

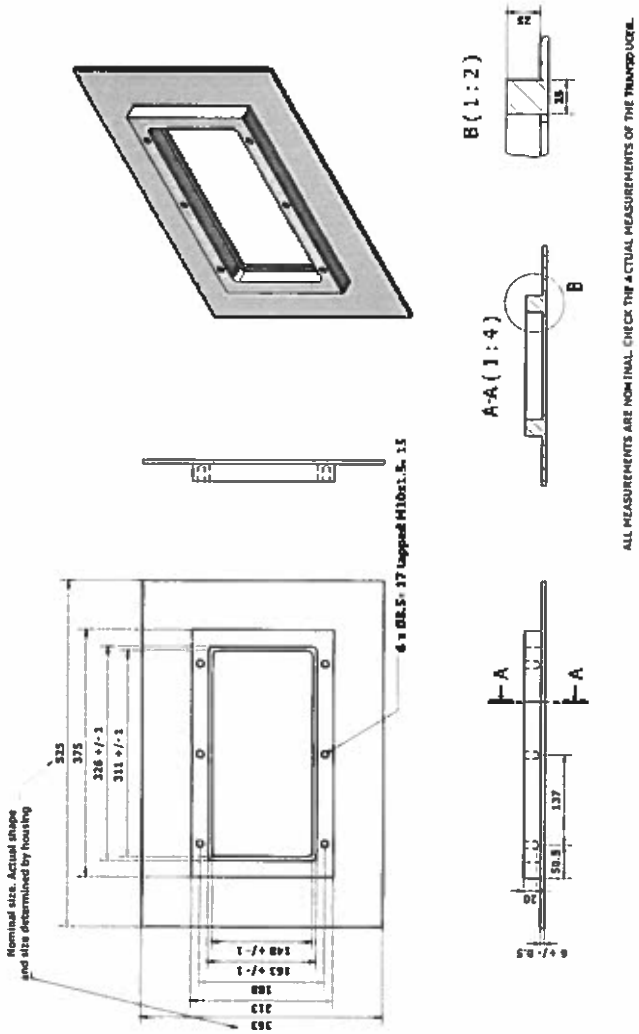

PARTS LIST

ITEM	QTY	PART NUMBER	DESCRIPTION
1	3	Angle iron clamp	40x40x5 mm mild steel
2	1	Mounting plate	Mild steel
3	1	Transducer	WSP-501-160
4	6	Threaded end	M10x1.5 120 mm
5	12	M10 nut	

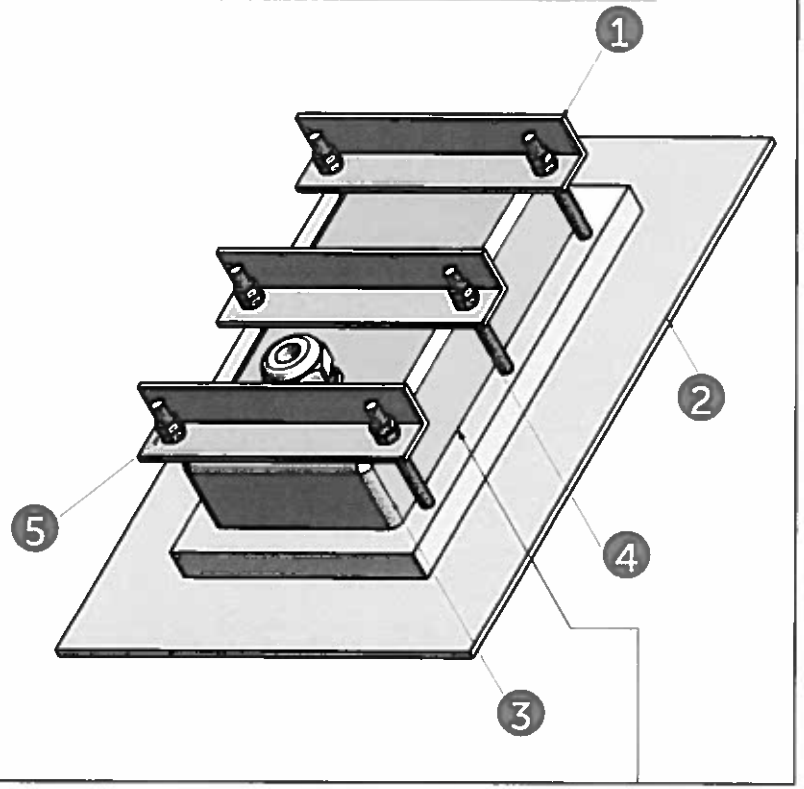

6.2. 80KHZ TRANSDUCER MOUNTING ASSEMBLY

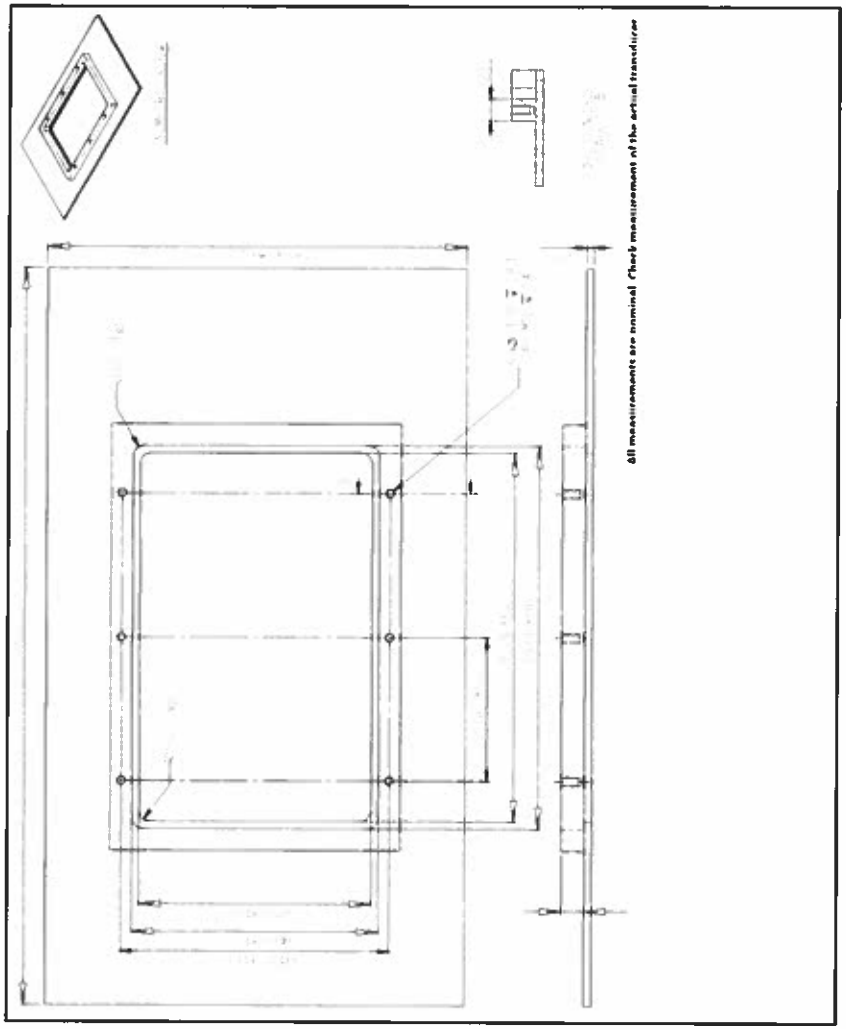

TRANSDUCER INSTALLATION MANUAL
wassp MULTIBEAM

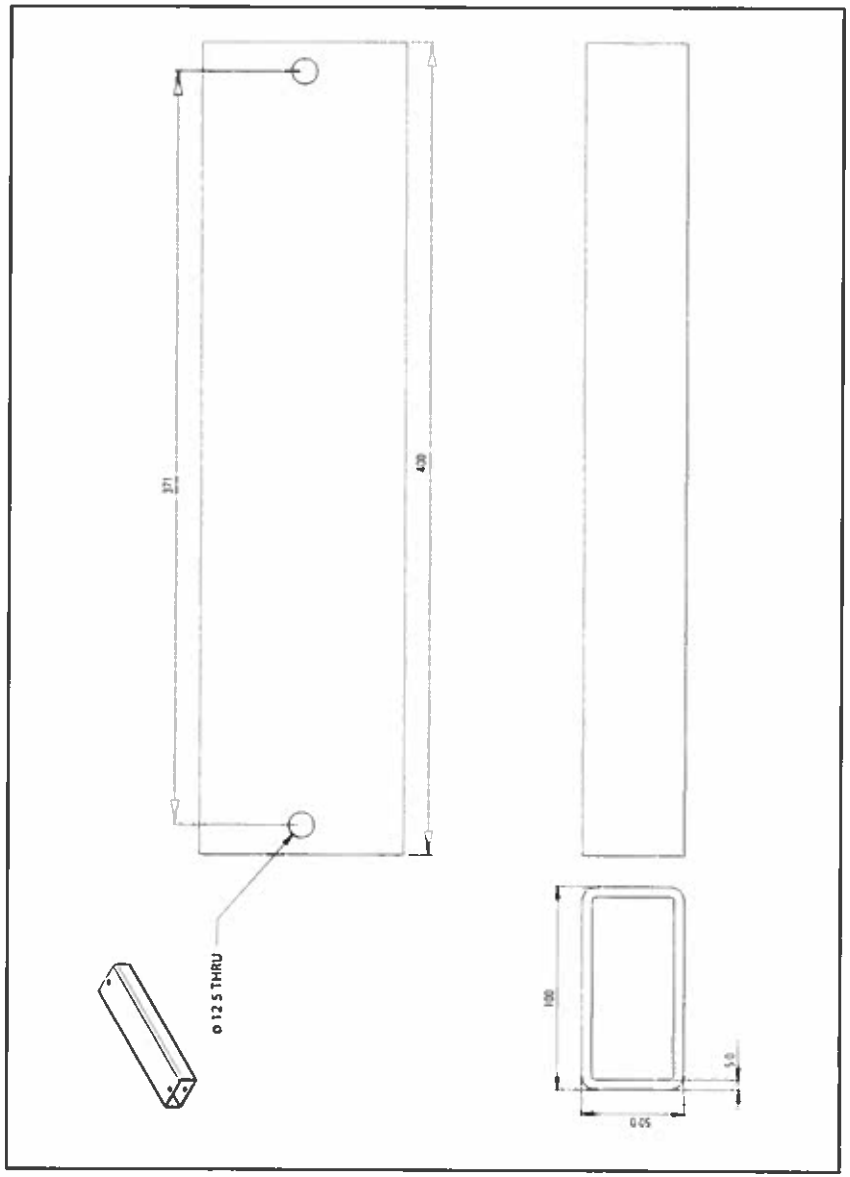

Tighten the nuts indicated by '4' to a torque of 15-20Nm

If any gaps exist between the transducer body '6' and the mounting frame '1' they will need to be filled by a water proof 24hr cure epoxy.

All measurements are nominal. Check measurement of the actual transducer.

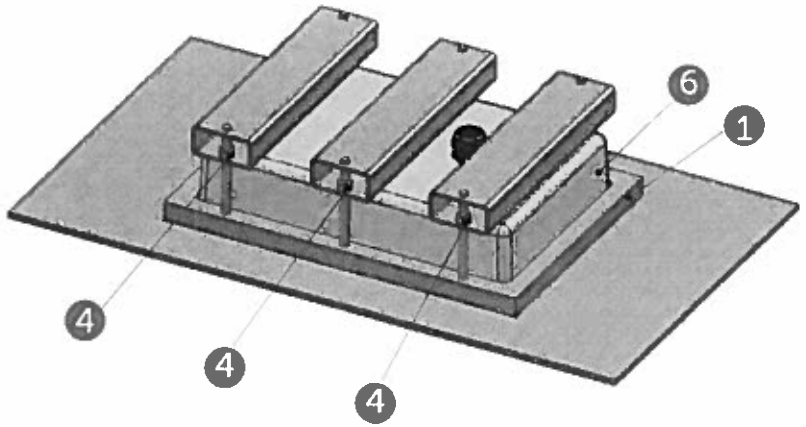

7 PRODUCT REGISTRATION, SUPPORT AND RESOURCES

TECHNICAL SUPPORT

If you require maintenance and/or repair contact your local dealer. A list of WASSP dealers and distributors is available at wassp.com

DRX technical support is available directly through

- Email: support@wassp.com
- Online http://wassp.com/support/ and click on 'Request Support'

LATEST RESOURCES

- For the latest version of manuals http://wassp.com/manuals/
- For software updates and release notes http://wassp.com/software-updates/
- For System drawings, mechanical drawings and declarations of conformity http://wassp.com/dealer-resources/

YOUR NOTES

ENL Group

wassp MULTIBEAM

SEE IT ALL