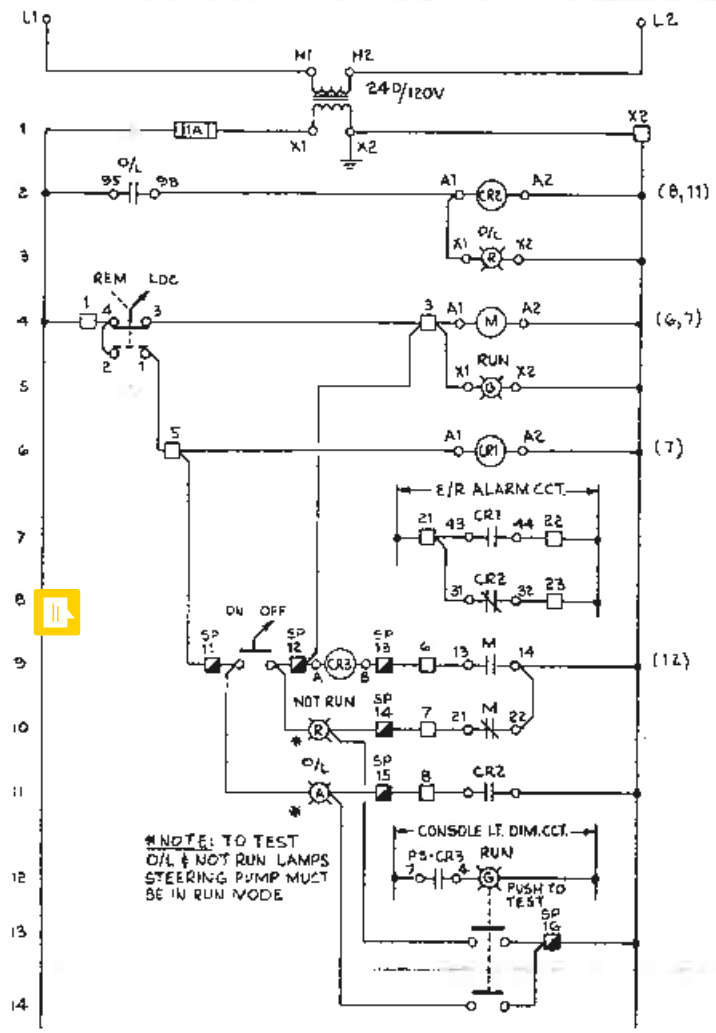

STEERING PUMP MOTOR CONTROL SCHEMATIC

(Nº1 PUMP SHOWN - Nº2 PUMP SAME)

☐ - TERM. IN MOTOR STARTER

◪ - TERM. IN W/H CENTRE CONSOLE

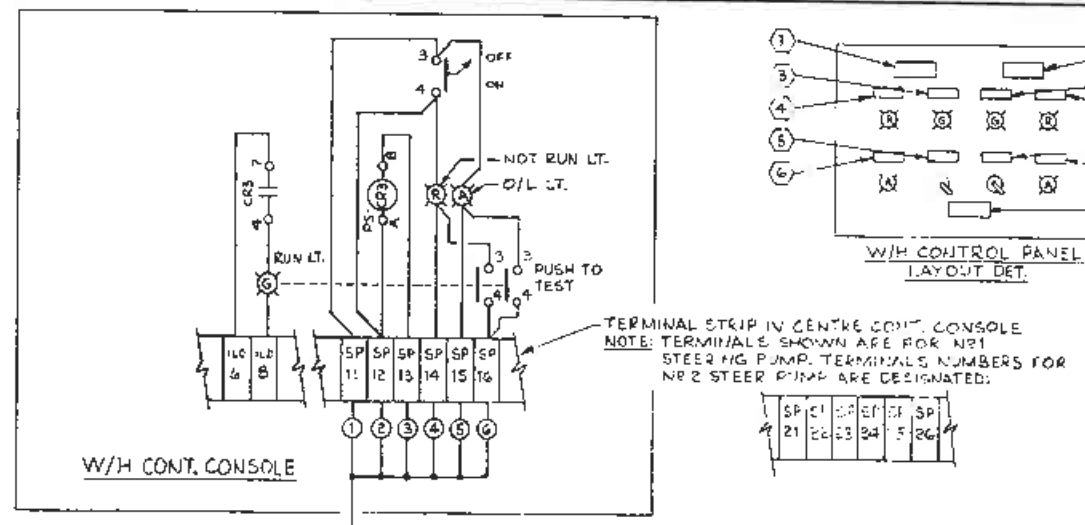

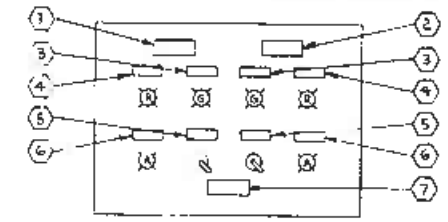

W/H CONTROL PANEL LAYOUT DET.

NAMEPLATE LIST				
ITM	DESCRIPTION	SIZE	COLOUR	QUANT.
1	STEERING PUMP Nº1	2½" x ¾"	BK/W	1
2	STEERING PUMP Nº2	2½" x ¾"	BK/W	1
3	MOTOR RUN	1½" x ½"	BK/W	2
4	MOTOR NOT RUN	1½" x ½"	BK/W	2
5	MOTOR OVERLOAD	1½" x ½"	BK/W	2
6	OFF ON	1½" x ½"	BK/W	2
7	PUSH BUTTON LIGHT TO TEST ALARM [illegible] MOTOR [illegible] SWITCHES	3" x ¾"	BK/W	1

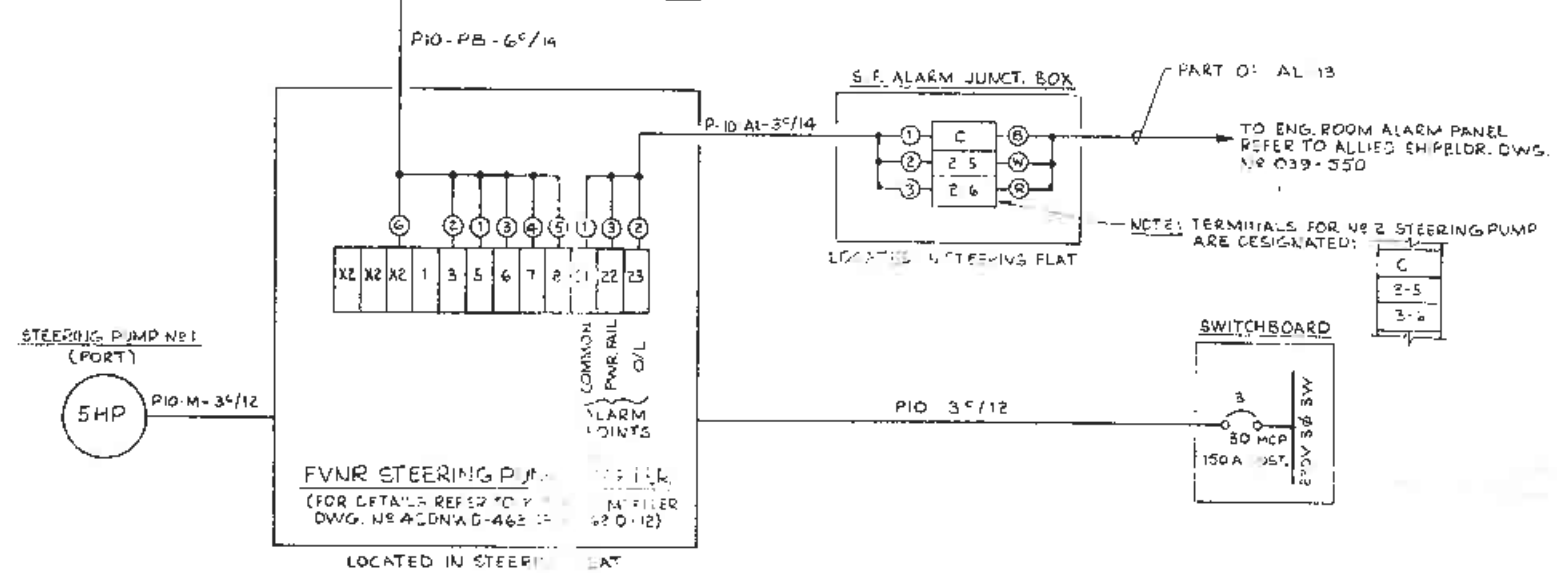

ISSUED

MAY 15 1990

ALLIED SHIPBUILDERS LTD.

ALLIED SHIPBUILDERS LTD.
NORTH VANCOUVER, CANADA

DEPARTMENT OF FISHERIES & OCEANS
OTTAWA, CANADA

HULL 250 "R.B. YOUNG"
STEERING PUMP MOTOR CONTROL

DRAWN BY	C.B.	APPROVED BY	
DATE	DEC. 14/89	APPROVED BY	
SCALE	N.A.	APPROVED BY	
DESIGN NO.	921	DWG. NO.	039-537

PSD 55-65-90