BETHEL
HANGAR
(EXISTING)
Bethel Armory (airport)
Feet
0
250

Hazardous materials shed
Proposed generator location
New Tank
Electrical line (trench)
Garage door
Man doors
Bethel Hangar
Bethel Armory (airport)
0
Feet
250

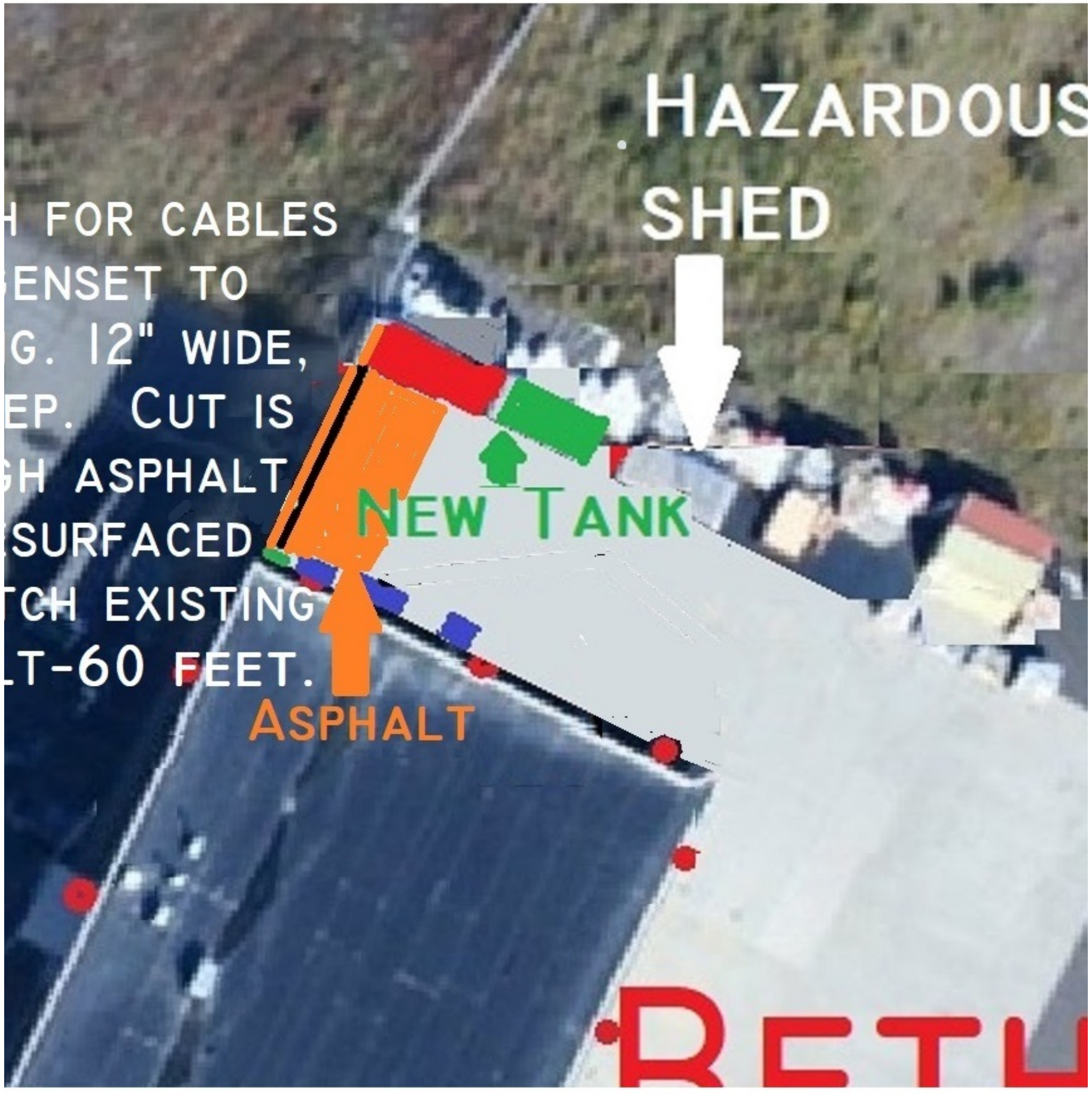
HAZARDOUS
SHED
H FOR CABLES
ENSET TO
G. 12" WIDE,
EP. CUT IS
GH ASPHALT
SURFACED
TCH EXISTING
LT-60 FEET.
NEW TANK
ASPHALT

08/14/2019 13:16

08/14/2019 13:16

36
NOTICE

Bethel Hangar Generator Project
Service Disconnect

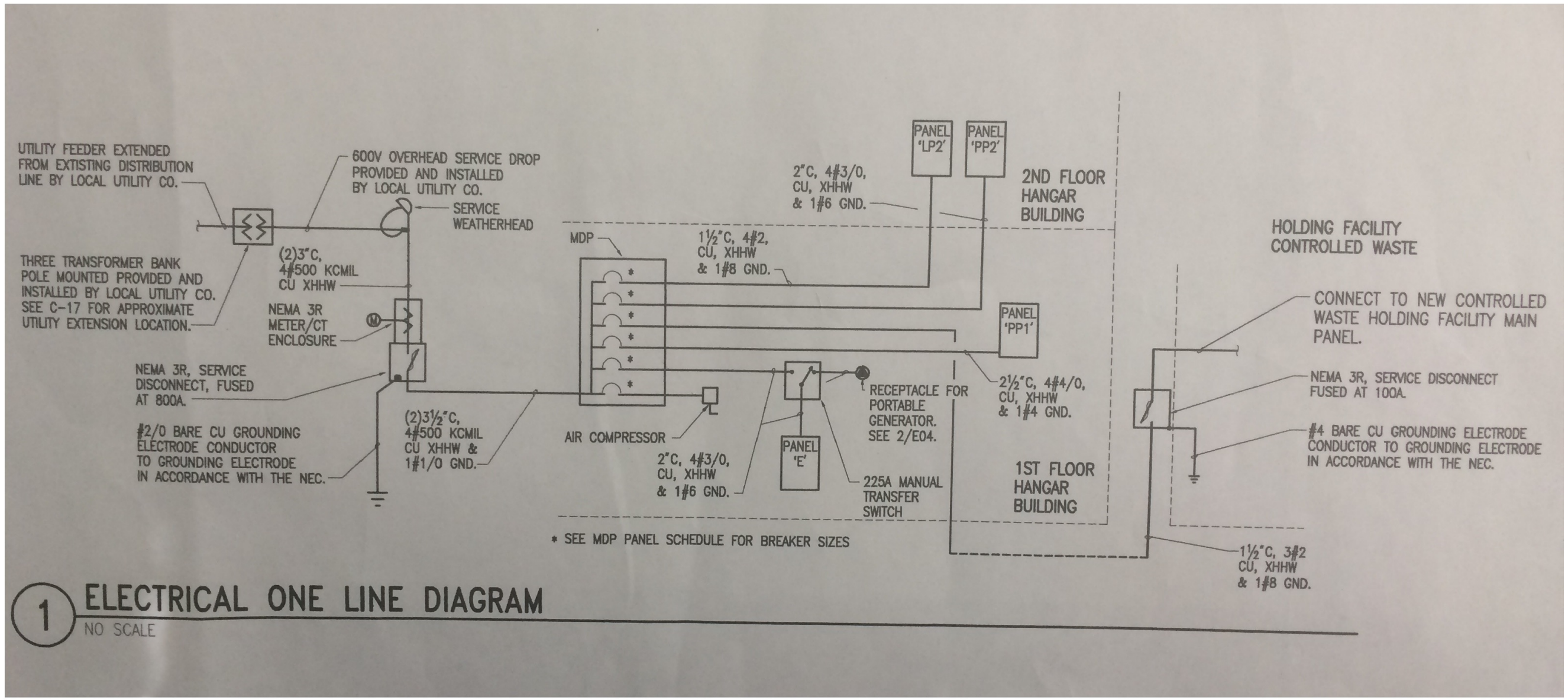

Bethel Hangar Standby
Generator Project

DISTRIBUTION SWITCHBOARD SCHEDULE "A"

LOCATION: RM.#108 VOLT 120/208 Ø 3 WIRE 4 AMP 600 MAIN 600A

ITEM	SWITCH ____ BREAKER ____	LOAD SERVED	LOAD KVA CONNECTED	D.F.	DEMAND	REMARKS
1.	150A 3P	PANEL 'B'	47.1	7	33	
2.	150A 3P	PANEL 'C'	41.5	7	29	
3.	100A 3P	PANEL 'E'	25.9	8	20.7	
4.	50A 3P	SUPPLY FAN (7½ HP)	8	1.0	8	
5.	30A 3P	EXHAUST FAN (5 HP)	5	1.0	5	
6.	100A 3P	SPARE	-	-	-	
7.	(3) AT 100A 3P	SPACES	-	-	-	
		TOTAL	127.5	.75	95.7	

CONNECTED LOAD KVA 127.5 AMPS 353

DEMAND FACTOR .75

DEMAND LOAD KVA 95 AMPS 263

SPARE CAPACITY (20%) KVA 25.5 AMPS 53

TOTAL DEMAND KVA 120.5 AMPS 338

AIC RATING: 22,000 MINIMUM FOR BREAKERS 65,000 FOR SWITCHBOARD

SURFACE X FLUSH ____

FREE STANDING ____

C.T. COMPARTMENT YES ☐ NO ☒

NO. C

CKT NO.	LO
1	LIGH
3	
5	
7	
9	
11	
13	
15	RO
17	SP
19	SP
21	D.
23	RO OI
25	
27	
29	
31	(3
33	(3
35	
37	SY
39	SP
41	

REMAR
MINIMU
SURFA

Bethel AAOF (Hangar) Diesel Generator Project
First Floor

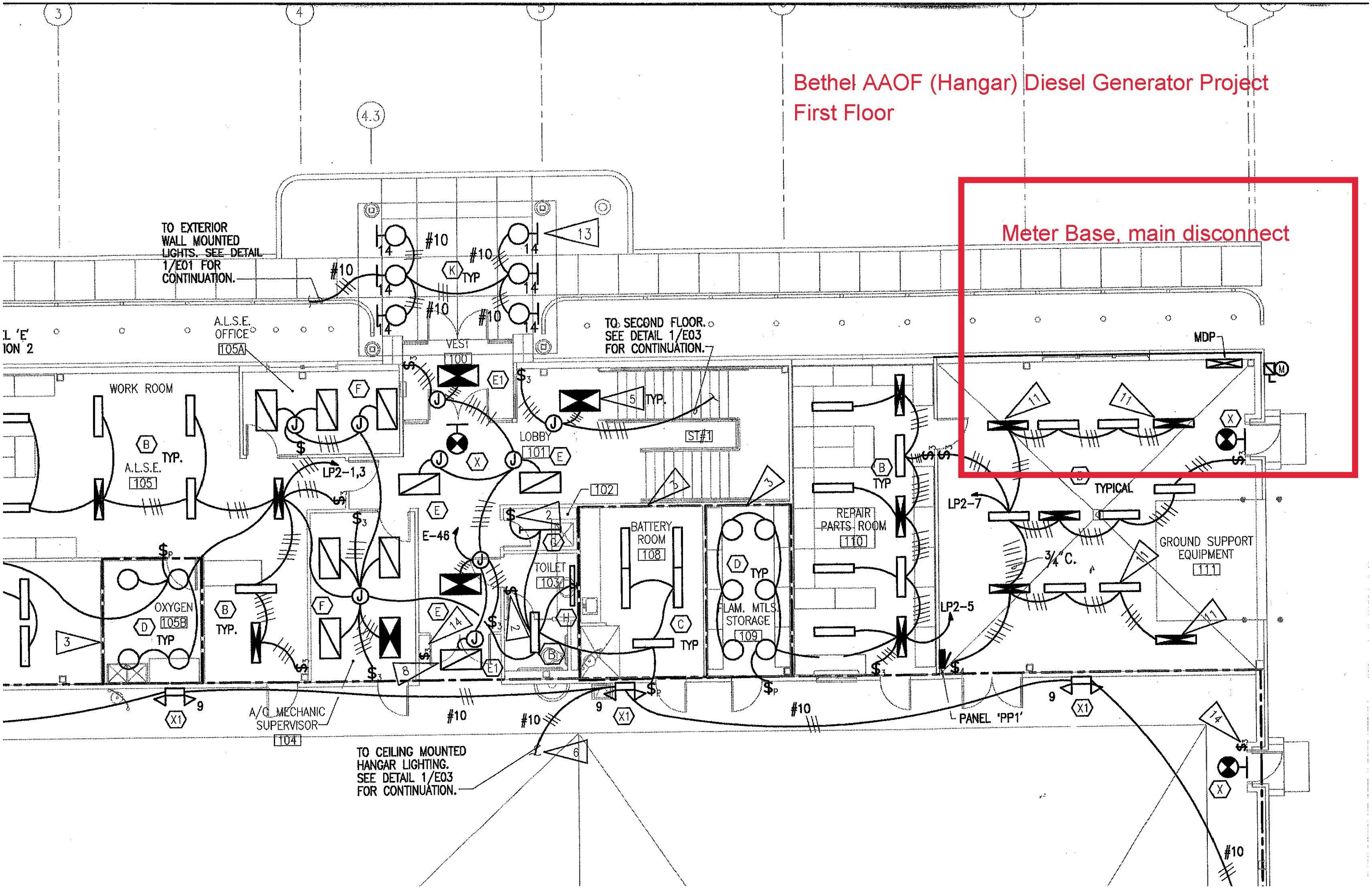

Bethel Hangar Generator Project
MDP

MDP

SQ.D TYPE I-LINE | 120/208V,3ø,4W | SURFACE MTD. | 800A MLO

CIRC	POLE	AMPS	SERVICE	VOLT-AMPS A		VOLT-AMPS B		VOLT-AMPS C		SERVICE	AMPS	POLE	CIRC
1		100	PANEL 'LP2'	10,388	13,830					PANEL 'PP2'	200		2
3						10,857	15,110						4
5	3							10,790	13,656			3	6
7		225	PANEL 'E'	17,427	5,800					AIR COMPRESSOR	90		8
9						18,806	5,800						10
11	3							16,588	5,800			3	12
13		225	PANEL 'PP1	23,060	9,600					CONTROLLED WASTE FAC.	100		14
15						23,390	9,600					2	16
17	3							26,270		SPACE	–	1	18
19		200	SPARE	–									20
21						–							22
23	3							–					24
			TOTAL V-A	80,105		83,563		73,104		236,772	VA		
			TOTAL AMPS	668		696		609		657	A		

A.I.C. RATING: 10,000A

Bethel Hangar Generator Project
Panel E Section I

PANEL E (SECTION 1)

SQ.D TYPE NQOD — 120/208V,3ϕ,4W — SURFACE MTD. — 400A MLO

	CIRC	POLE	AMPS	SERVICE	VOLT-AMPS A		VOLT-AMPS B		VOLT-AMPS C		SERVICE	AMPS	POLE	CIRC
	1	1	15	CUH-1, EF-5, FSDs	650	1175					GP-1	15	1	2
	3		20	EF-2 & 3			1392	1175			CP-3			4
	5		15	UH-2, 3, &4, EF-4					864	1175	CP-4			6
	7		20	RECPT. BOILER ROOM	540	1000					UH-1, WH-1, CP-5 & 6	20		8
*	9		30	RAIN LEADER HEAT TRACE			675	–			SPARE			10
*	11			HANGAR SUMP HEAT TRACE					675	–				12
*	13		20	SEWAGE TANK HEAT TRACE	700	1600					CP-1	30		14
	15			SPARE			–	1600						16
*	17			HANGAR DOOR HEAT TRACE					1250	1600			3	18
	19			SPARE	–	1600					CP-2	30		20
	21		30	LS-1			2110	1600						22
	23								2110	1600			3	24
	25	3			2110	720					B-2	15		26
	27		20	AIRCRAFT FUEL DISPENSER			828	720						28
	29	2							828	720			3	30
	31		30	WP-1 & 1B	1600	720					B-1	15		32
	33						1600	720						34
	35	3							1600	720			3	36
	37		15	JP-1	720	500					VF-1	15		38
	39						720	500						40
	41	3							720	500			3	42
				SECTION 1 V-A		13,635		13,640		14,362		41,637	VA	
				SECTION 1 AMPS		114		114		120		116	A	
				TOTAL V-A		25,757		27,136		28,198		81,091	VA	
				TOTAL AMPS		215		226		235		225	A	

A.I.C. RATING: 10,000A

* PROVIDE 30mA GFI EQUIPMENT BREAKER FOR ALL HEAT TRACE CIRCUITS.

Bethel Hangar Generator Project
Panel LP2

PANEL LP2

SQ.D TYPE NQOD — 120/208V,3ø,4W — SURFACE MTD. — 225A MLO

CIRC	POLE	AMPS	SERVICE	VOLT-AMPS A		VOLT-AMPS B		VOLT-AMPS C		SERVICE	AMPS	POLE	CIRC
1	1	20	LIGHTS 1ST FLOOR SOUTH AREA	1660	1543					LTS. 2ND FL. CREW, BATH	20	1	2
3			LIGHTS 1ST FLOOR CENTER AREA			1450	1037			LTS. BREAK, FLIGHT PLAN, MECH.			4
5			LIGHTS FLAM. STOR. & PARTS RM.					1750	1855	LTS. OPERATIONS			6
7			LIGHTS GSE	750	1250					LTS. SAFETY BREIF, OPP. SPEC.			8
9		30	LIGHTS HANGAR			2000	1185			EXTERIOR LIGHTS	20		10
11	2							2000	1185			2	12
13		30	LIGHTS HANGAR	2000	1185					EXTERIOR LIGHTS	20		14
15	2					2000	1185					2	16
17		30	LIGHTS HANGAR					2000	–	SPARE	20	1	18
19	2			2000	–								20
21		30	LIGHTS HANGAR			2000	–						22
23	2							2000		SPACE	–		24
25	1	–	SPACE										26
27													28
29													30
31													32
33													34
35													36
37													38
39													40
41													42
			TOTAL V-A		10,388		10,857		10,790		32,035	VA	
			TOTAL AMPS		87		90		90		89	A	

A.I.C. RATING: 10,000A

Bethel Hangar Generator Project
Panel E- section 2

PANEL E (SECTION 2)

SQ.D TYPE NQOD — 120/208V,3ø,4W — SURFACE MTD. — 400A MLO

CIRC	POLE	AMPS	SERVICE	VOLT-AMPS A		VOLT-AMPS B		VOLT-AMPS C		SERVICE	AMPS	POLE	CIRC
43	1	20	GENERAL RECEPT. 1ST FLR.	1260	800					CORRIDOR LIGHTS 2ND FL	20	1	44
45			GENERAL RECEPT. 2ND FLR.			1080	1166			CORRIDOR LIGHTS 1ST FL			46
47			UH-5 & 6 FIRE SMOKE DAMP.					1056	720	UH-9	15		48
49			TELEPHONE TERM. BACK.	500	720								50
51		25	UH-7			1700	720					3	52
53			UH-8					1700	2030	LTS HANGAR	20		54
55		20	BOILER ROOM LIGHTS	512	2030							2	56
57			FIRE ALARM PANEL			500	2030			LTS HANGAR	20		58
59			CONTROL PANEL						2030			2	60
61			SPARE		2100					HANGAR DOOR	35		62
63							2100						64
65									2100			3	66
67					2100					HANGAR DOOR	35		68
69							2100						70
71									2100			3	72
73		NA	SPACE		2100					CRANE	35		74
75							2100						76
77									2100			3	78
79										SPARE	20	1	80
81													82
83													84
			TOTAL V-A	12,122		13,496		13,836			39,454	VA	
			TOTAL AMPS	101		112		115			110	A	

A.I.C. RATING: 10,000A

Bethel Hangar Generator Project
Panel PP1

PANEL PP1

SQ.D TYPE NQOD — 120/208V,3Ø,4W — SURFACE MTD. — 225A MLO

CIRC	POLE	AMPS	SERVICE	VOLT-AMPS A		VOLT-AMPS B		VOLT-AMPS C		SERVICE	AMPS	POLE	CIRC
1	1	20	HANGAR RECPT. NORTH EAST	720	0					SPARE	50		2
3						720	0					2	4
5			HANGAR RECPT. SOUTH WEST					900	4800	208V HANGAR RECPT.	50		6
7				720	4800							2	8
9						720	4800			208V HANGAR RECPT.	50		10
11			GSE RECEPTACLES					900	4800			2	12
13				900	4800					208V HANGAR RECPT.	50		14
15			1ST FLOOR OFFICE RECPT.			1080	4800					2	16
17								900	4800	208V HANGAR RECPT.	50		18
19				900	4800							2	20
21						900	3450			WWRS-1 RECYCLER	30		22
23								720	3450			2	24
25				720	1200					WWRS-1 REPRESSURE	20	1	26
27			HEADBOLT HEATERS			1500	1920			WWRS-1 SUMP PUMP	15		28
29								1500	500	AHU-1			30
31				1500	500								32
33						1500	500					3	34
35								1500		SPACE	–	1	36
37				1500									38
39						1500							40
41								1500					42
TOTAL V-A				23,060		23,390		26,270		72,720 VA *			
TOTAL AMPS				192		195		219		202 A			

A.I.C. RATING: 10,000A

* DEMAND LOAD = 51,660VA (144A)

Bethel Hangar Generator Project
Panel PP2

PANEL PP2

SQ.D TYPE NQOD — 120/208V,3ϕ,4W — SURFACE MTD. — 225A MLO

CIRC	POLE	AMPS	SERVICE	VOLT-AMPS A		VOLT-AMPS B		VOLT-AMPS C		SERVICE	AMPS	POLE	CIRC
1	1	20	RECEPT. CREW QUARTERS	720	720					RECEPT. SAFETY BREIFING	20	1	2
3			RECEPT. CREW QUARTERS			720	900			RECEPT. SAFETY BREIFING			4
5			RECEPT. BREAKROOM COUNTER					360	540	RECEPT. MECHANICAL			6
7			RECEPT. BREAKROOM, LOCKERS	1080	1080					RECEPT. OPERATIONS			8
9			RECEPT. WOMENS ROOM			360	1080			RECEPT. FLIGHT INSTRUCTIONS			10
11			RECEPT. MENS ROOM					360	1080	RECEPT. SUPER. AIRCRAFT PILOT			12
13			RECEPT. FLIGHT PLAN, BREAKRM.	900	210					UH-7 & 8			14
15			RECEPT. OPERATIONS SPEC.			900	1670			EF-1	25		16
17			RECEPT. COMMUNICATIONS					720	1296	CF-1 HANGAR	20		18
19			SPARE	–	720					HANGAR CORD REEL RECEP.			20
21			RECEPT. OPERATIONS			360	720						22
23			SPARE					900	–	SPARE			24
25				–	–								26
27						–	–						28
29								–	–				30
31		35	HANGAR DOOR	2100	2100					CRANE	35		32
33						2100	2100					3	34
35	3							2100	2100				36
37		35	HANGAR DOOR	2100	2100					AHU-1	35		38
39						2100	2100						40
41	3							2100	2100			3	42
			TOTAL V-A		13,830		15,110		13,656		42,596	VA	
			TOTAL AMPS		115		126		114		118	A	

A.I.C. RATING: 10,000

SQUARE D

NQOD PANELBOARD
TABLERO NQOD

CATALOG NO. No. DE CATALOGO	SERIES SERIE
NQOD442L225CU	E2

MADE IN U.S.A. HECHO EN E.U.A.

MAX. AMPS A max	VOLTS AC V	PH FASES	WIRE HILOS
225	208Y/120	3	4
	240	3	3
	240/120 (DELTA)	3	4

7

EL DISPARO AUTOMATICO ES INDICADO POR LA POSICION INTERMEDIA DE LA PALANCA ENTRE CERRADO (ON) Y ABIERTO (OFF). PARA RESTAURAR SERVICIO MOVER LA PALANCA HACIA OFF Y LUEGO HACIA ON.

AUTOMATIC TRIP IS INDICATED BY HANDLE POSITIO MIDWAY BETWEEN ON AND OFF. RESTORE SERVICI BY MOVING HANDLE TO OFF THEN ON.

80110-389-

SQUARE D COMPANY

PERU PLANT

F.O. 12 — 11416685 019

MADE IN U.S.A. 80043-258-02

CATALOG NUMBER
12114668501G
MAIN AMP
600
SERIES
E1
VOLTS
208Y/120
PH.
3
WIRE
4
SEE RATING OF MAIN
BREAKER INSTALLED
SQUARE D
LOAD
CENTER
BOARD
DANGER
DANGER

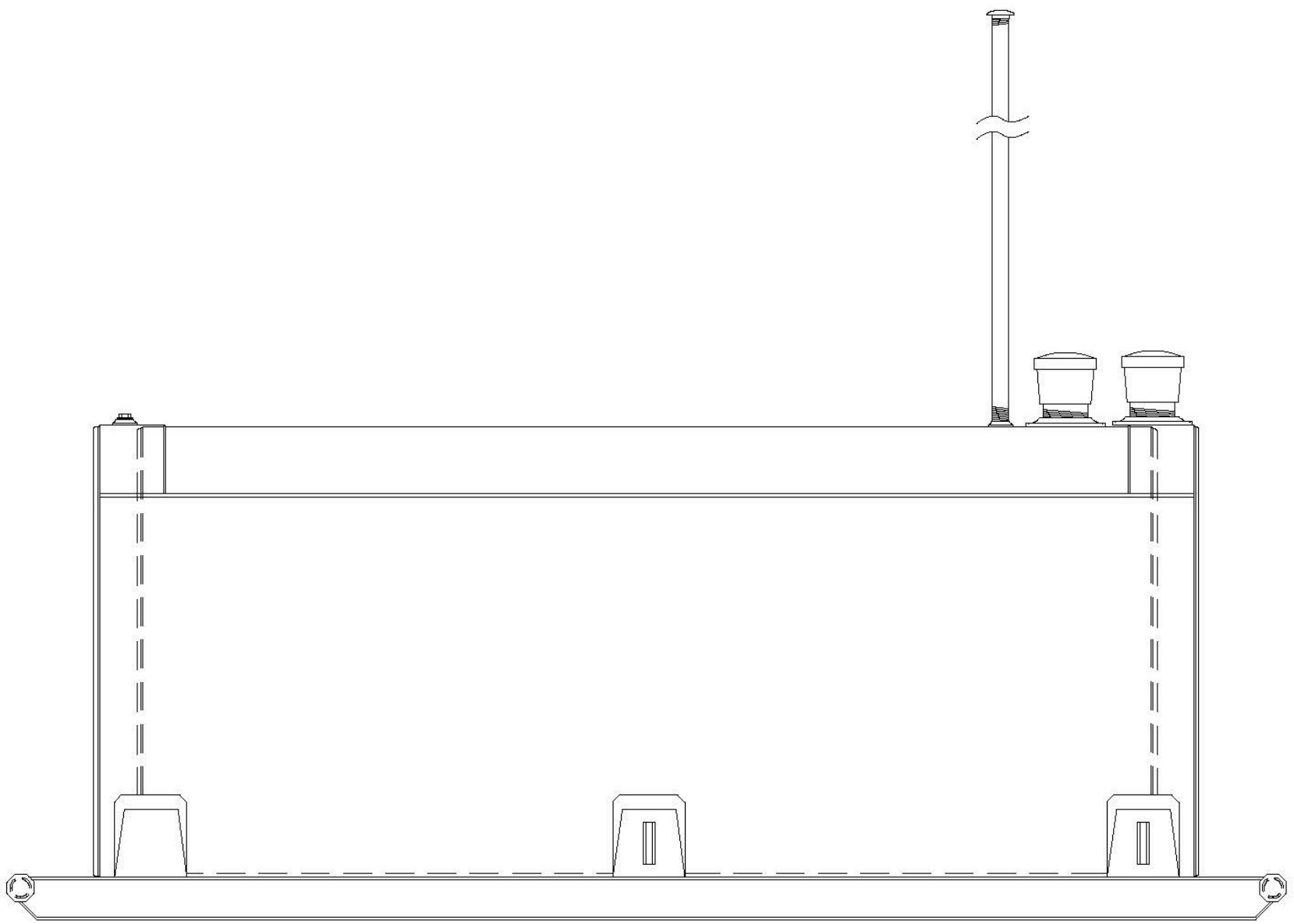

3/16"
1,500
GALLON
STEEL
DOUBLE WALL • ABOVEGROUND
F921
STORAGE TANK
Diesel Fuel

MODEL	ENCLOSURE WEIGHT KG [LBS]
ALUMINIUM SOUND	317 [700]

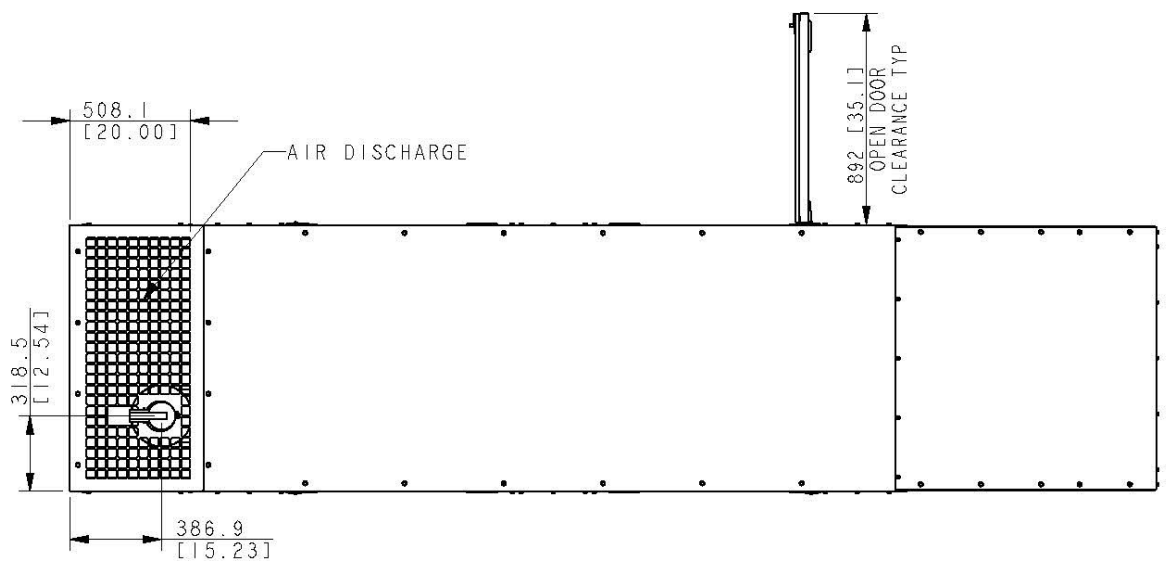

NOTES:

1. IF TANK IS ORDERED, ENCLOSURE MOUNTS DIRECTLY TO TANK
2. TANK MAY EXTEND BEYOND ENCLOSURE (DISCHARGE END ONLY)

DIMENSIONS IN [ ] ARE INCH EQUIVALENTS

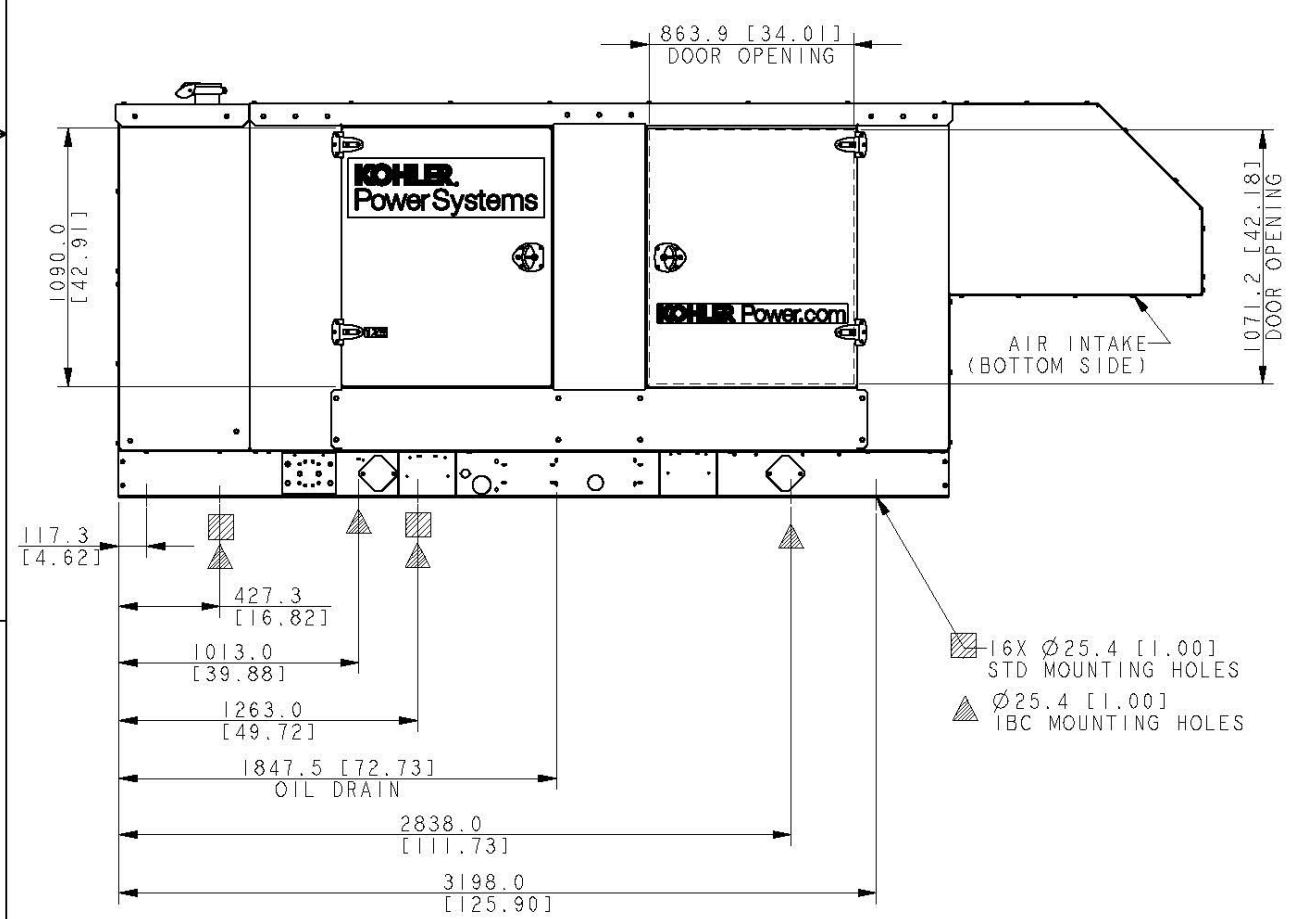

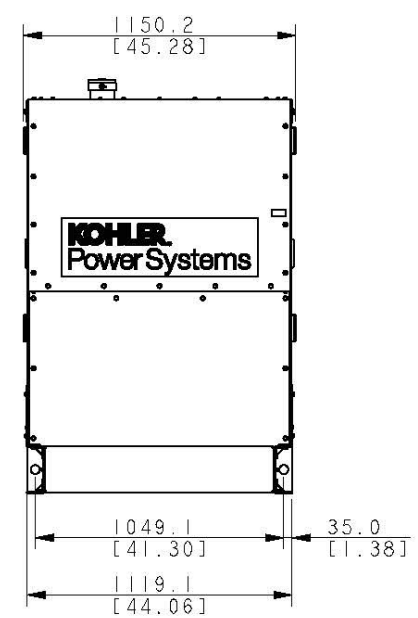

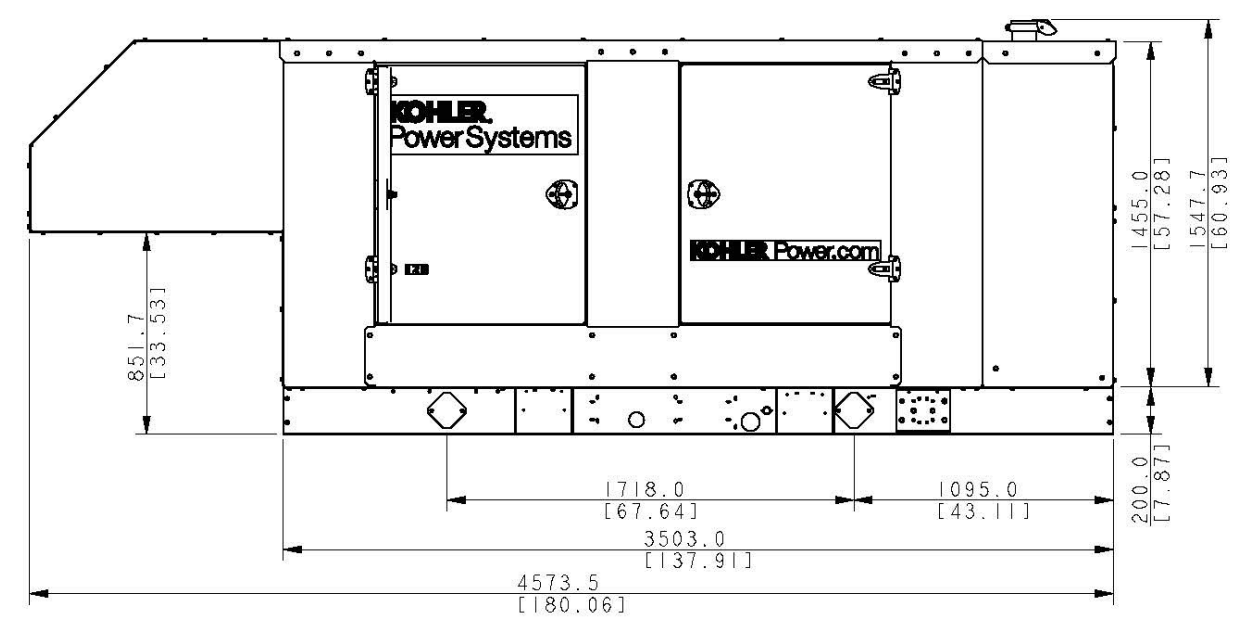

125 MODEL 4S11, 4S13, 4R12X, 4R13X, 4T13X
150 MODEL 4S13, 4S15, 4R13X, 4T13X, 4S12X, 4S13X
RECONNECTABLE
IMPROVE MOTOR STARTING (IMS) RECONNECTABLE
600V & 1 PHASE ALTERNATORS
4045HF285 & 6068HF285 JOHN DEERE TIER III

REV	DATE	ON COMPOSITE DWGS, SEE PART NO. FOR REVISION LEVEL	BY
-	12-23-14	NEW DRAWING [CT88261]	PKK

UNLESS OTHERWISE SPECIFIED -
1) DIMENSIONS ARE IN MILLIMETERS
2) TOLERANCES ARE:
X.XX ± 0.25
X.X ± 1.0
X ± 1.5
ANGLES ± 0° 30'
SURFACE FINISH MAX.
THIRD ANGLE PROJECTION

APPROVALS		DATE
DRAWN	PKK	12-23-14
CHECKED	CCL	12-23-14
APPROVED	DA	12-23-14

KOHLER CO. METRIC PRO-E

POWER SYSTEMS, KOHLER, WI 53044 U.S.A.

THIS DRAWING IN DESIGN AND DETAIL IS KOHLER CO. PROPERTY AND MUST NOT BE USED EXCEPT IN CONNECTION WITH KOHLER CO. WORK. ALL RIGHTS OF DESIGN OR INVENTION ARE RESERVED.

TITLE **DIMENSION PRINT**

SCALE 0.07 | CAD NO. | SHEET 1 of 1

DRG NO. **ADV-8763** | D

FIRE PULL
STATION
08/14/2019 13:26

PROPANOL 99%
0083M02320
FLAMMABLE LIQUID
3
20290
08/14/2019 13:26

SPRINKLER FIRE
08/14/2019 13:27

ESSENCE
08/14/2019 13:28

HUGGIES
08/14/2019 13:28