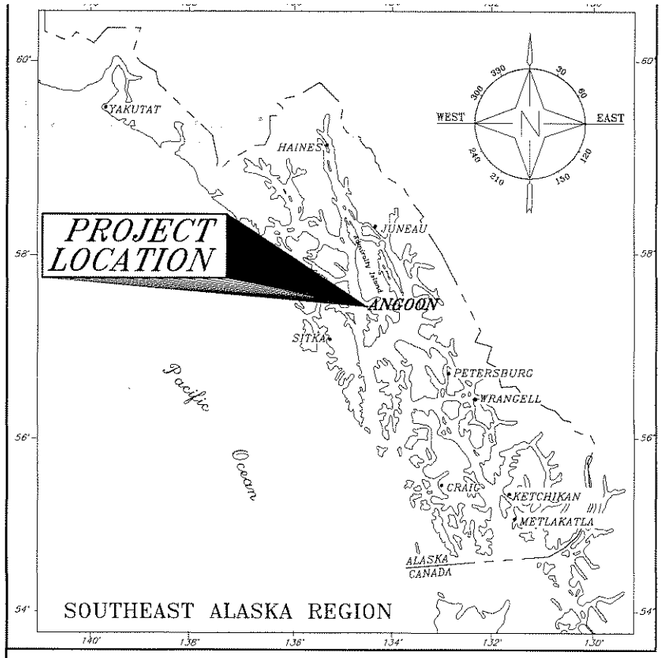

Location Map

DESIGNED BY
STATE OF ALASKA
DEPARTMENT OF TRANSPORTATION
AND PUBLIC FACILITIES
S O U T H E A S T R E G I O N

A PROJECT AT

ANGOON, ALASKA

ANGOON FERRY TERMINAL IMPROVEMENTS

PROJECT NO. 68502/AK-03-0080

RE-BID

INDEX OF SHEETS

SHEET NO.	DESCRIPTION
1	Title Sheet
2	Bid Schedule & General Notes
3	Survey Control & Property Boundaries
4	Demolition Plan
5	Site Plan
6	Marine Site Plan – Existing & New Structures
7	Pile Data
8	Miscellaneous Uplands Improvements
9	Bridge Head Gate
10–11	Transfer Bridge General Plan & Elevation
12–14	Shoreward Bearings
15–18	Transfer Bridge Details
19–20	Seaward Bridge Bearings
21	Ramp & Apron General Layout
22–23	Bridge Float
24–27	Platform
28–37	Ramp
38–40	Apron
41–42	Float Restraint Collars
43	Skiff Fenders
44–46	Float-Mounted Stern Fenders
47	Dolphins N1, N2, S1, & S2
48	Dolphin S3
49–53	Dolphins N3 & N7
54–56	Dolphins N4, N5, & N6
57	Fender Panels
58–59	Miscellaneous Details
60	Pile Rock Socket & Tension Anchor Details
61	Signage
E1–11	Electrical

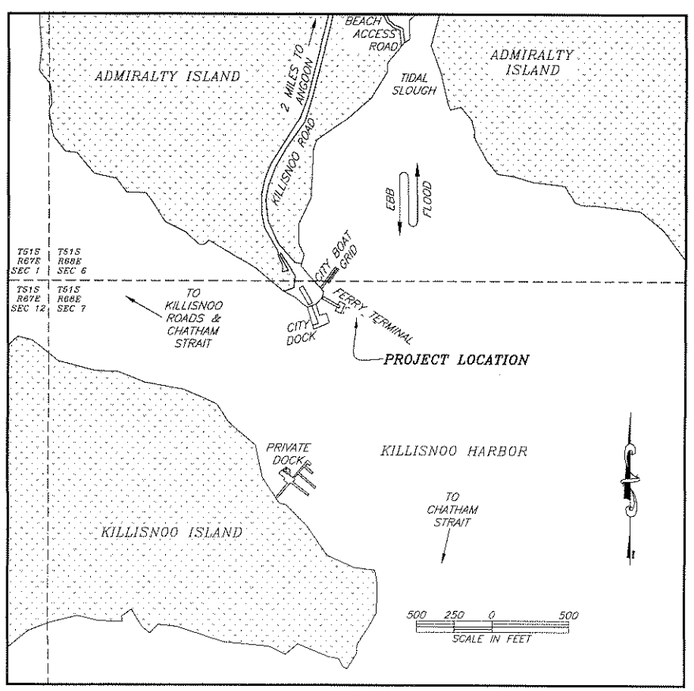

Vicinity Map

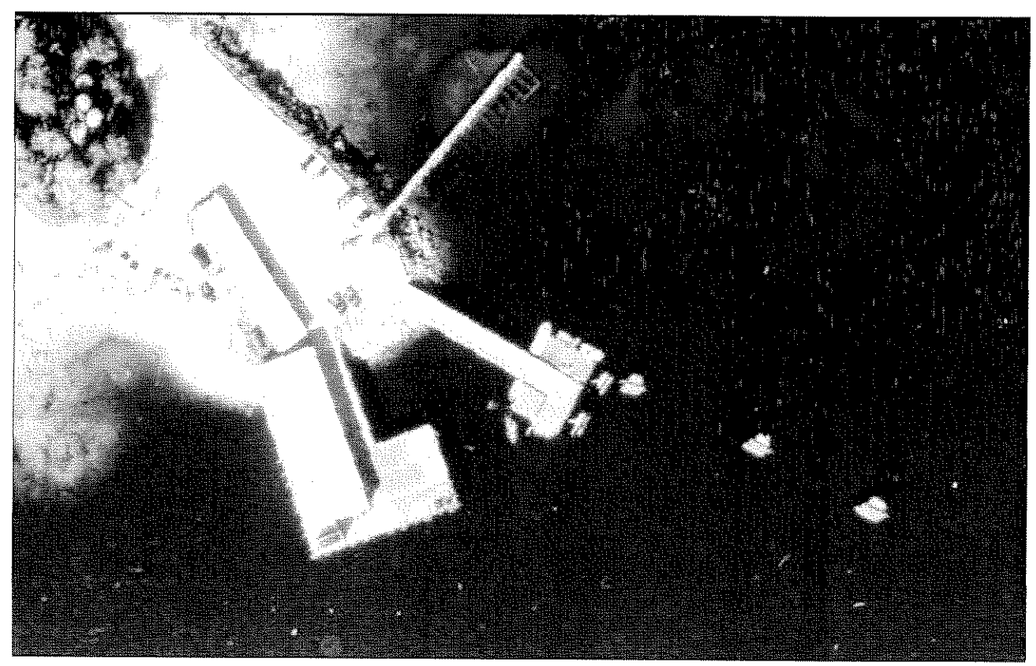

Existing Terminal Site

THE FOLLOWING STANDARD DRAWINGS APPLY TO THIS PROJECT:

F-01.01	L-03.10	S-01.00
G-00.01	L-23.01	S-05.01
G-04.07	S-00.10	S-30.03

TIDAL DATA (ft)	
EHW	+19.0
MHHW	+14.1
MHW	+13.2
MTL	+7.4
MLW	+1.6
MLLW	0.0
ELW	−5.5

STATE OF ALASKA
DEPARTMENT OF TRANSPORTATION
AND
PUBLIC FACILITIES
SOUTHEAST REGION

APPROVED Victor Winters Date 3.24.10
Regional Preconstruction Engineer
Victor M. E. Winters, P.E.

APPROVED Cindy Hughes Date 4.28.10
Director, S.E. Region
Gary L. Davis

CERTIFIED TRUE & CORRECT AS-BUILT OF ACTUAL FIELD CONDITION:

Construction Project Manager Date

PROJECT NUMBER: 68502

DATE: March, 2010

SHEET 1 OF 72

STATE OF ALASKA 49th Kirk D. Miller CE-8550 REGISTERED PROFESSIONAL ENGINEER
3/29/10

Addendum No. 1
Attachment No. 3

ABBREVIATIONS

AASHTO	American Association of State Highway & Transportation Officials
Abut	Abutment
ACZA	Ammoniacal copper zinc arsenate
AISC	American Institue of Steel Construction
Alum	Aluminum
ASTM	American Society for Tesing & Materials
ATS	Alaska Tideland Survey
AWS	American Welding Society
bf	Flange width
BOP	Beginning of project
Brg	Bearing
Btm	Bottom
Btwn	Between
C	Structural steel channel
C-bore	Counterbore
C/C	Center to center
CF	Cross frame
CJP	Complete joint penetration
CL	Centerline
℄	Centerline
Clr	Clear
Cntr	Center
Conc	Concrete
Conn	Connection
CS	Contingent sum
Ctsk	Countersink
CU	Cubic
CVN	Charpy V-Notch
D	Web depth
dbl	Double
Desc	Description
DL	Dead Load
Ea	Each
Econ Hd	Economy head
EHW	Extreme high water
Elev	Elevation
ELW	Extreme low water
Est	Estimated
FB	Flat bar
Flng	Flange
FS	Far side
g	Gage
Ga	Gage
Galv	Galvanized
Gr	Grade
h	Girder depth
hd	Head
HDPE	High density polyethylene plastic
HP	Structural steel H-shaped members
Hrz	Horizontal
HSS	Hollow structural section
Ht	Height
ID	Inside diameter
IR	Inside radius
L	Length or Structural steel angle
Le	End distance
LF	Linear foot
LIW	Load indicating washer
LL	Live load, or lane load
Loc	Location(s)
LRFD	Load & Resistance Factor Design
LS	Lump Sum
M	Structural steel H-shaped member
MC	Structural steel channel
Mfr	Manufacturer
MHHW	Mean higher high water
MHW	Mean high water
MI	Malleable iron
MLLW	Mean lower low water
MLW	Mean low water
Mrk'd	Marked
MT	Structural steel tees mode from respective H-shaped members
MTL	Mean tide line
NAD	North American Datum
No	Number
NS	Non-shrinking, or near side
OC	On center
OD	Outside diameter
O/O	Out to out
OPP	Opposite
OR	Outside radius
Ortho	Orthogonal
pen	Penetration
PL	Plate
℗	Plate
Plcs	Places
Qty	Quantity
R	Radius
Req	Required
Req'd	Required
Rnd	Round
S	Structural steel H-shaped members, or spacing
SAE	Society of Automotive Engineers
Sec	Section
Sht	Sheet
Sp	Space
Spcs	Spaces
Specs	Specifications
sqr	Square
SS	Stainless steel
ST	Structural steel tees made from respective H-shaped members
STA	Station
Std	Standard
Symm	Symmetric
T	Thick
T&B	Top and bottom
tf	Flange thickness
TFE	Tetrafluoroethylene (PTFE-polytetrafluoroethylene -Teflon polymer)
tw	Web thickness
Typ	Typical
UHMW	Ultra high molecular weight polyethylene plastic
UON	Unless otherwise noted
USS	United States Survey
vert	Vertical
W	Wide or Structural steel H-shaped member
WP	Work point
wt	Weight
WT	Structural steel tees made from respective H-shaped members
X-frame	Cross frame
XS	Extra strong (pipe)
XXS	Double extra strong (pipe)

BID SCHEDULE

ITEM NO.	ITEM	EST. UNIT	ESTIMATE QUANTITY
202 (1)	DEMOLITION & REMOVAL	L.S.	ALL REQUIRED
202 (13)	TERMINAL CLOSURE PRICE ADJUSTMENT	C.S.	ALL REQUIRED
504 (1)	TRANSFER BRIDGE	L.S.	ALL REQUIRED
504 (2)	SHOREWARD & SEAWARD BEARINGS	L.S.	ALL REQUIRED
504 (3)	STEEL BRIDGE FLOAT SYSTEM	L.S.	ALL REQUIRED
504 (4)	PLATFORM, RAMP & APRON, & ASSOCIATED LIFT & FRAMING SYSTEMS	L.S.	ALL REQUIRED
504 (5)	FLOAT STERN FENDERS & FRAMING	L.S.	ALL REQUIRED
504 (6)	FLOAT RESTRAINT PILE COLLARS	EACH	4
504 (7)	BRIDGE FLOAT ANODES, SKIFF FENDERS & CLEATS	L.S.	ALL REQUIRED
504 (8)	3-PILE FLOAT RESTRAINT DOLPHIN CAP (N1 & S1)	EACH	2
504 (9)	3-PILE FLOAT RESTRAINT & MOORING DOLPHIN CAP (N2 & S2)	EACH	2
504 (10)	3-PILE FLOATING FENDER DOLPHIN CAP (S3)	EACH	1
504 (11)	5-PILE FLOATING FENDER DOLPHIN CAP & LADDER (N3, & N7)	EACH	2
504 (12)	3-PILE HANGING FENDER DOLPHIN CAP & LADDER (N4, N5, & N6)	EACH	3
504 (13)	FENDER PANEL & RUBBER FENDERS (N4, N5, & N6)	EACH	3
504 (14)	BRIDGE GATE & GUARDRAIL RESTORATION	L.S.	ALL REQUIRED
505 (1)	30" DIA. X 1/2" WALL PIPE PILE, FURNISHED	L.F.	540
505 (2)	30" DIA. X 1/2" WALL PIPE PILE, DRIVEN	EACH	7
505 (3)	24" DIA. X 3/4" WALL PIPE PILE, FURNISHED	L.F.	361
505 (4)	24" DIA. X 3/4" WALL PIPE PILE, DRIVEN	EACH	3
505 (5)	24" DIA. X 1/2" WALL PIPE PILE, FURNISHED	L.F.	783
505 (6)	24" DIA. X 1/2" WALL PIPE PILE, DRIVEN	EACH	8
505 (7)	20" DIA. X 1/2" WALL PIPE PILE, FURNISHED	L.F.	1424
505 (8)	20" DIA. X 1/2" WALL PIPE PILE, DRIVEN	EACH	16
505 (9)	150 LB PILE ANODE	EACH	20
505 (10)	DRILLED ROCK SOCKET OR PIN PILE	EACH	2
518 (1)	TENSION PILE ANCHORS	EACH	32
520 (1)	FLOATING FENDER & MOORING CROWN (S3)	L.S.	ALL REQUIRED
520 (2)	FLOATING FENDER, RISER & MOORING CROWNS (N3)	L.S.	ALL REQUIRED
520 (3)	FLOATING FENDER, RISER & MOORING CROWNS (N7)	L.S.	ALL REQUIRED
611 (3)	RIPRAP, CLASS II	L.S.	ALL REQUIRED
615 (7)	SIGNS	L.S.	ALL REQUIRED
640 (1)	MOBILIZATION & DEMOBILIZATION	L.S.	ALL REQUIRED
640 (4)	WORKER MEALS AND LODGING, or PER DIEM	L.S.	ALL REQUIRED
641 (1)	EROSION & POLLUTION CONTROL ADMINISTRATION	L.S.	ALL REQUIRED
641 (2)	TEMPORARY EROSION AND POLLUTION CONTROL	C.S.	ALL REQUIRED
642 (1)	CONSTRUCTION SURVEYING	L.S.	ALL REQUIRED
644 (1)	FIELD OFFICE	L.S.	ALL REQUIRED
644 (8)	VEHICLES & SKIFF	L.S.	ALL REQUIRED
662 (1)	ELECTRICAL POWER, LIGHTING & CONTROL SYSTEMS	L.S.	ALL REQUIRED

LEGEND

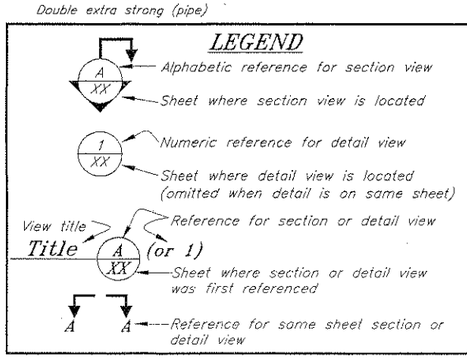

-GENERAL NOTES-

Specifications: Per Contract Documents for Project No. AK-03-0080 ~ 68502

Design Standards: AISC Steel Construction Manual 13th Ed. LRFD
AASHTO LRFD Bridge Design Specifications 4th Ed. - 2007 w/ 2008 Interim Revisions

Design Loads: Berthing - 50 kips
Mooring - 30 kips

Design Vessels: Alaska Marine Highway System - M/V Fairweather/Chenega, M/V Aurora/LeConte, M/V Lituya
Inter-Island Ferry Authority - M/V Prince of Wales/Stikine

Bridge: See Bridge Notes, Sheet 11

Materials

Steel Shapes & Plates:

Plates & Shapes -	ASTM A36, unless otherwise noted
Hollow Structural Sections -	ASTM A500 Gr. B
HP -	ASTM A572 Gr. 50
Pipe -	ASTM A53 Gr. B
Stainless Steel -	ASTM A276 Type 316
W -	ASTM A992

Charpy Group 2 impact requirements shall apply where noted on Plans

Piling: API 5L X52, or ASTM A252 Gr. 3, or ASTM A709 Gr. 50 fabricated to API 2B

Steel Grating: ASTM A709 Gr. 50, welded-bar type, serrated top, thickness & bar spacings as noted on Plans

UHMW: Ultra High Molecular Weight Polyethylene Plastic ASTM D4020

Fasteners: Per specs

Aluminum:

Plates -	ASTM 5086 H112
Shapes -	ASTM 6061-T6

Rebar:

Ladder rungs -	ASTM A706 Gr. 60
Other -	ASTM A615 Gr. 60

Sawn Timber: S4S Douglas Fir No. 1 or better per WCLIB/WWPA grading rules
Pressure treated with ACZA to 0.6 pfc retention

Protective Coatings

All Steel, Piling, & Weldments: Galvanized after fabrication per specs, unless otherwise noted

Bridge Float: Exterior coating per Plans & specs, System 1

Transfer Bridge, Vehicle Platform, Ramp, & Apron: See Bridge Notes, Sheet 11

Piling

Materials & Size: Per above & as per Pile Table & Plans

Tips: Per specs, driving shoes required on all piles, APF 14001 or equal

Driving & Anchoring Rqmt's: Per specs, Pile Table, & Plans

Welds

All welding shall be performed by qualified persons in accordance with AWS D1.1 and D1.5 as applicable.

All aluminum welding shall be performed in accordance with AWS D1.2.

Unless otherwise noted on the plans, all fillet welds are 1/4" minimum size.

DO NOT SCALE FROM THESE DRAWINGS USE DIMENSIONS

DESIGNED BY: Staff

STATE OF ALASKA 49th Kirk D. Miller CE-8550 REGISTERED PROFESSIONAL ENGINEER 5/21/10

CHECKED BY: K. Miller
DRAFTED BY: M. Walters

STATE OF ALASKA
DEPARTMENT OF TRANSPORTATION
& PUBLIC FACILITIES
S.E. REGION DESIGN & ENGINEERING SERVICES DIVISION

Angoon Ferry Terminal Improvements, Re-Bid

Bid Schedule & General Notes ADDENDUM NO. One

PATH: Q:\Ang\68502\MF\Specs\Rebid 3-10\02 Estimate of Quantities & General Notes_Addendum 1.
PLOT: PSPACE 1=1 Tab: Layout1 Fri, 21/May/10 08:57AM

REVISIONS NO	DATE	DESCRIPTION	PROJECT DESIGNATION	YEAR	SHEET NO.	TOTAL SHEETS
			68502	2010	2	72

Field-Located STA 5+00

Contractor must center STA 5+00 on field-surveyed location of shoreward bearing swivel pin and apply project centerline bearing as given.

H&V BASIS
Angoon Ferry Terminal Improvements
Project # 68502

HORIZONTAL CONTROL

Horizontal Control for this project is based on the DOT/PF 2003 Angoon Grid.

Project Specific Basis of Horizontal Control

1001 : 2" brass cap located atop abutment to Grid dock mrk'd "RM2_C3_TR-A_ATS1026".
ANG-Grid N 600000.0000 FT US, E 300000.0000 FT US

1003 : 2 1/2" brass cap located in a well in Kootznahoo Road.
ANG-Grid N600253.8610 FT US, E 299716.3525 FT US

Bearing 1003-1001: S 48°10'19" E

VERTICAL CONTROL

The Vertical Datum for ANG Grid 2003 is MLLW based on a series of 6 tide shots taken between 9/9-11/2003. Observed was compared to predicted at Juneau tide gauge and the offset was applied to Angoon predicted tides.

The Project Specific Basis of Vertical Control is 1001 (RM2) having an accepted elevation of 24.41 feet above MLLW.

UNITS ARE US SURVEY FEET. DATUM IS NAD83(96). VERTICAL IS MLLW BASED ON A SERIES OF TIDE SHOTS

POINT	LOCAL NORTH	LOCAL EAST	ORTHO HT	DESC
6	599940.8515	299984.2501	25.26	GPS_PK/WASHER_AFT-6
7	600322.1389	299845.1753	21.81	BC2"_WCMC4_AFT-7
1000	599933.1381	300006.0625	24.43	GPS_BC2"_RM1_C3/C8_TR-A_ATS1026
1001	600000.0000	300000.0000	24.41	GPS_BC2"RM2_C3_TR-A_ATS1026_RM-2
1002	600018.6371	299771.8317	37.54	PRIMON_CC-POST2.5"_USLM-2
1003	600253.8610	299716.3525	42.08	CL_MON_DOT

DO NOT SCALE FROM THESE DRAWINGS USE DIMENSIONS

DESIGNED BY: Staff
3-12-10
STATE OF ALASKA 49TH Timothy Reed No. 10613 REGISTERED PROFESSIONAL LAND SURVEYOR
CHECKED BY: T. Reed
DRAFTED BY: M. Walters

STATE OF ALASKA
DEPARTMENT OF TRANSPORTATION
& PUBLIC FACILITIES
S.E. REGION DESIGN & ENGINEERING SERVICES DIVISION

Angoon Ferry Terminal
Improvements, Re-Bid

Property Boundaries
& Survey Control

PATH: Q:\Ang\68502\MF\Planset\03 Property Boundaries & Survey Control.dwg
PLOT: PSPACE 1=1 Tab: Property Boundaries & Survey Control Fri, 12/Mar/10 02:30PM

REVISIONS			PROJECT DESIGNATION	YEAR	SHEET NO.	TOTAL SHEETS
NO.	DATE	DESCRIPTION	68502	2010	3	72

A.T.S. 1017
TRACT B
LESSEE:
CITY OF ANGOON

Field-Located STA 5+00

Center of shoreward bearing beam swivel pin = STA 5+00

℄ bearing = S 61°46'35" E
= ℄ new bridge, ramp, apron, & float

Remove existing transfer bridge

Remove & salvage existing bridge float units, see specs

Existing abutment to remain

NRS
Center King Pile
STA 6+31.0 LT 32.0

N1
Center King Pile
STA 6+62.5 LT 16.5

E1
Center Pile Cap
STA 6+84.0 LT 29.0

Remove existing float restraint dolphins

Salvage existing windsock from this structure

E2
Center Pile Cap
STA 7+85.0 LT 34.5

SRS
Center King Pile
STA 6+31.0 RT 32.0

S1
Center King Pile
STA 6+62.5 RT 16.5

Remove existing stern fender dolphins

Photo taken from here

Remove existing vehicle platform

S 61°46'35" E

E3
Center Pile Cap
STA 8+85.0 LT 34.5

Remove existing side fender dolphins

Existing city dock outside of project limits

A.T.S. 1017
TRACT A
LESSEE:
CITY OF ANGOON

A.T.S. 1026
TRACT B
STATE OF ALASKA

A.T.S. 1026
TRACT A
STATE OF ALASKA
FERRY TERMINAL

7+00
7+50
8+00
8+50
9+00
Project ℄

Notes:

1) Reference As-Built Plans, & Pile Driving Logs for details not shown.

2) Some or all existing pipe piles may be anchored to bedrock with steel rod & grout.

3) All existing piles to be completely removed. Rock anchors may be cut off at mudline.

4) Reference Sheet 6 for limitations of operations and construction sequencing requirements.

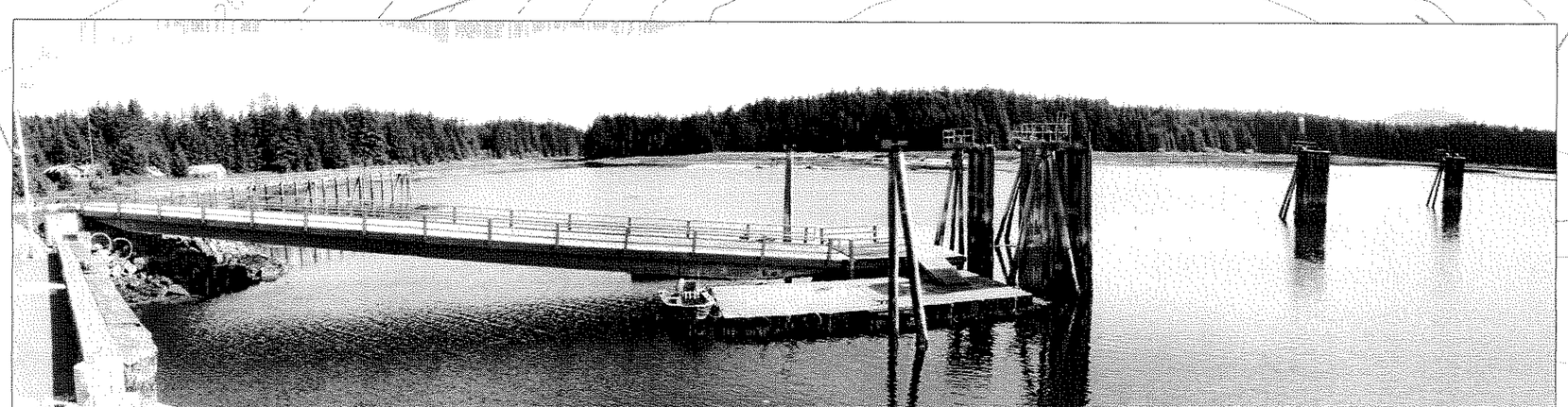

20 0 20 40 80
GRAPHIC SCALE (ft)

DO NOT SCALE FROM THESE DRAWINGS USE DIMENSIONS

DESIGNED BY: Staff

STATE OF ALASKA
49th
Kirk J. Miller
CE-8550
REGISTERED PROFESSIONAL ENGINEER
3/12/10

CHECKED BY: K. Miller
DRAFTED BY: M. Walters

STATE OF ALASKA
DEPARTMENT OF TRANSPORTATION
& PUBLIC FACILITIES
S.E. REGION DESIGN & ENGINEERING SERVICES DIVISION

Angoon Ferry Terminal
Improvements, Re-Bid

Demolition Plan

PATH: Q:\Ang\68502\MF\Planset\04 Demolition Plan.dwg
PLOT: PSPACE 1=1 Tab: Demolition Plan Fri, 12/Mar/10 10:23AM

REVISIONS			PROJECT DESIGNATION	YEAR	SHEET NO.	TOTAL SHEETS
NO.	DATE	DESCRIPTION	68502	2010	4	72

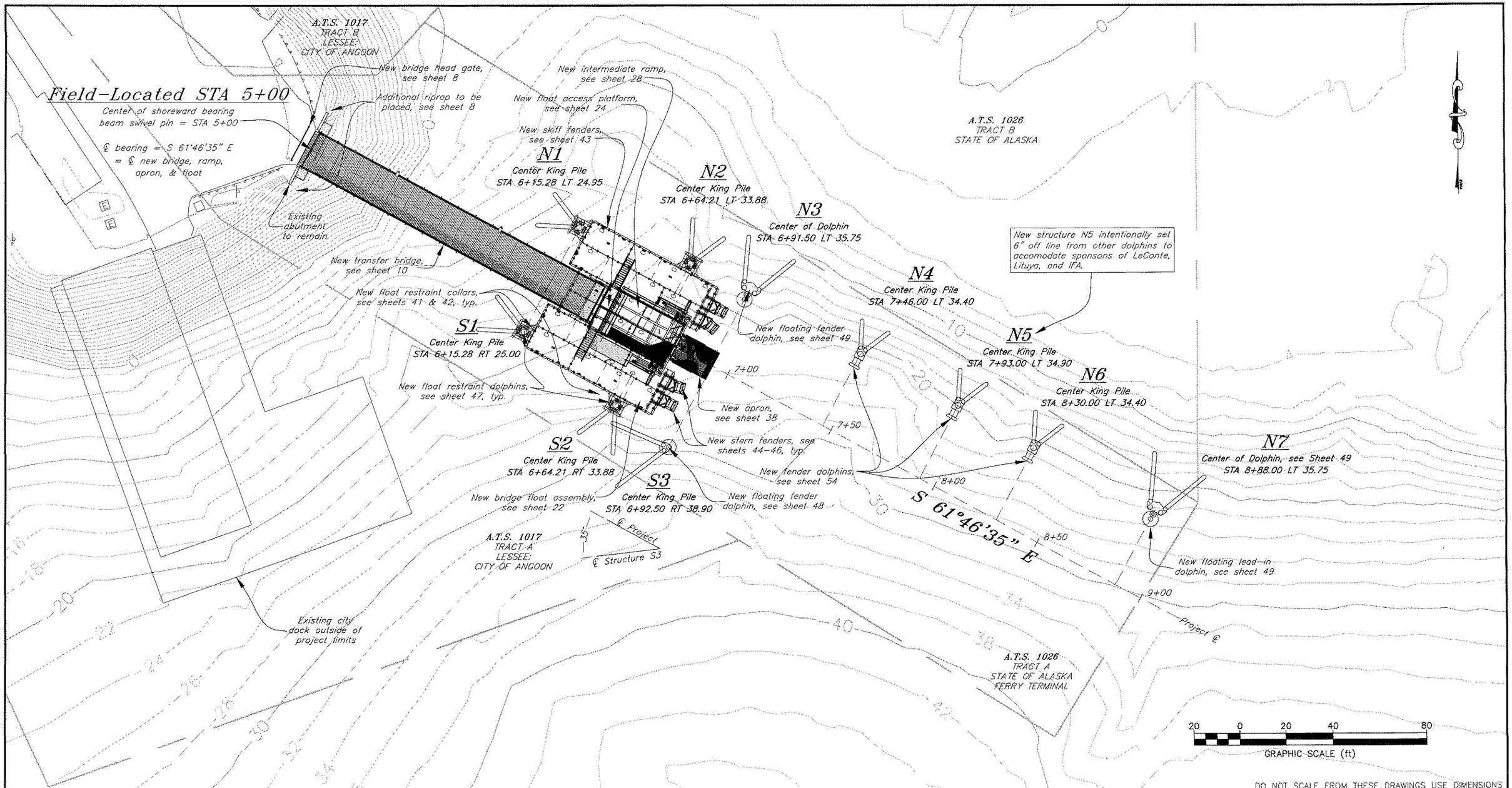

DO NOT SCALE FROM THESE DRAWINGS USE DIMENSIONS

DESIGNED BY: Staff

STATE OF ALASKA 49th Kirk D. Miller CE-8550 REGISTERED PROFESSIONAL ENGINEER

3/12/10

CHECKED BY: K. Miller

DRAFTED BY: M. Walters

STATE OF ALASKA
DEPARTMENT OF TRANSPORTATION
& PUBLIC FACILITIES
S.E. REGION DESIGN & ENGINEERING SERVICES DIVISION

Angoon Ferry Terminal Improvements, Re-Bid

Site Plan

PATH: Q:\Ang\68502\MF\Planset\05 Site Plan.dwg

PLOT: PSPACE 1=1 Tab: Site Plan

Fri, 12/Mar/10 10:42AM

REVISIONS			PROJECT DESIGNATION	YEAR	SHEET NO.	TOTAL SHEETS
NO.	DATE	DESCRIPTION	68502	2010	5	72

Addendum No. 1
Attachment No. 4

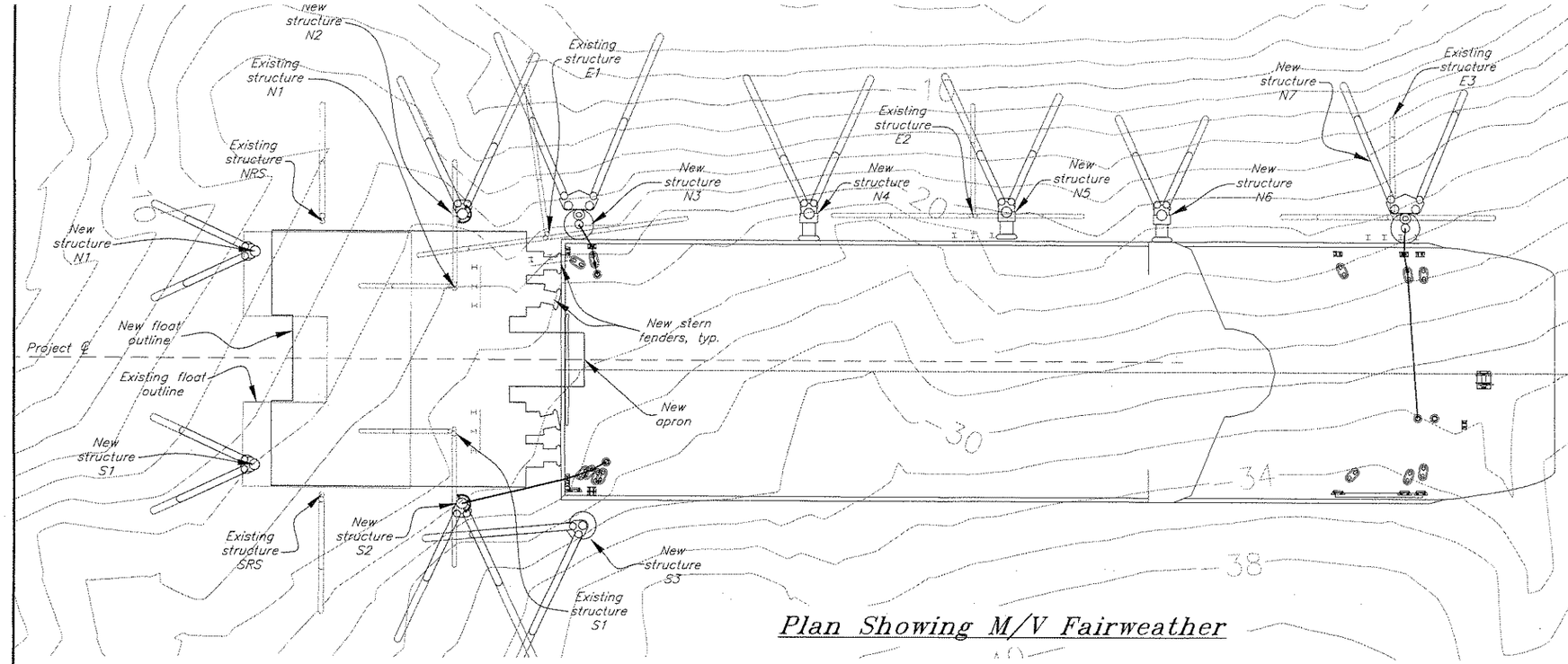

Plan Showing M/V Fairweather

16 0 16 32 64
GRAPHIC SCALE (ft)

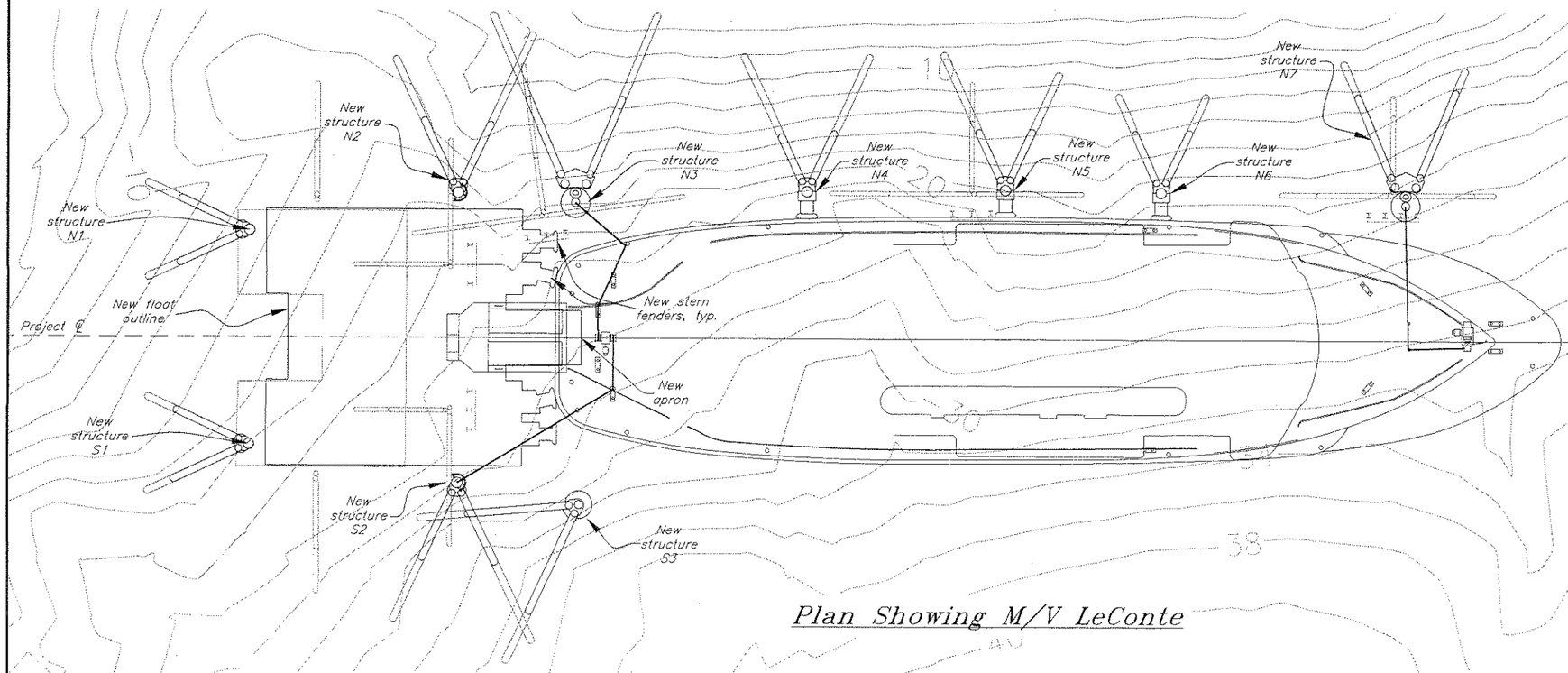

Plan Showing M/V LeConte

CONSTRUCTION LIMITATIONS AND SEQUENCING NOTES:

1. CONSTRUCTION PHASING PLAN – Prior to starting any excavation, disassembly, demolition, or other field work, the Contractor shall provide a detailed construction phasing plan. The plan shall describe the intended sequence of removal and installation of vehicle/pedestrian transfer structures, mooring and berthing structures, and associated items required for safe use of the terminal. No work may commence on site until the construction phasing plan has been approved by the Engineer.

2. AUTHORIZED TERMINAL CLOSURES – The Contractor shall sequence all demolition and construction to maintain ferry service in accordance with published ferry schedules, except during authorized terminal closures or when authorized in writing. The Contractor is authorized to close the terminal to ferry and local use from September 15 through October 15, 2010 and September 1 through September 30, 2011. During these two periods, the Contractor is allowed exclusive use of the terminal site for execution of the work.

3. UNAUTHORIZED TERMINAL CLOSURES – For each occurrence that a scheduled AMHS vessel is prevented from using the facility, a terminal closure price adjustment (deduction in contract payments) will be assessed under Bid Item 203(13). Coordinate with AMHS for the latest ferry schedules and updates when scheduling construction activities.

4. CLEAR ACCESS TO BERTH – Prior to scheduled AMHS ferry arrivals, the Contractors equipment and operations shall be moved to locations that will not affect the safe access, berthing, and transfer operations.

5. REQUIRED MOORING STRUCTURES – Unless otherwise approved, a minimum of three mooring structures must be provided at quarter, midship, and foremidship locations when vessels are scheduled to be in port. Existing structures shall not be removed until new structures are in place that will satisfy safe berthing requirements for the vessel. The Contractor shall assist the vessel in attaching and removing mooring lines if existing mooring lines are removed or replacement mooring lines are inaccessible by ship–based personnel.

6. REMOVAL OF TRANSFER BRIDGE – The existing transfer bridge, bridge support float, and existing berthing structures N1 and S1 shall be removed or otherwise made inoperable only during authorized terminal closures.

7. PUBLIC USE SKIFF MOORAGE – The existing bridge support float serves as temporary skiff moorage for local residents. To the extent feasible, the Contractor shall allow continued use of the existing or new bridge float providing the Contractor's activities are not impacted and public safety is maintained. The Contractor may prevent use of the existing float at their discretion based on public safety or impact to scheduled construction operations. The Contractor shall post appropriate local and public notices and otherwise barricade entrance to the shore side of the transfer bridge and/or the floats to discourage or prevent use of the float when necessary.

DO NOT SCALE FROM THESE DRAWINGS USE DIMENSIONS

DESIGNED BY: Staff

STATE OF ALASKA 49th Kirk D. Miller CE-8550 REGISTERED PROFESSIONAL ENGINEER 5/21/10

CHECKED BY: K. Miller
DRAFTED BY: M. Wolters

STATE OF ALASKA
DEPARTMENT OF TRANSPORTATION
& PUBLIC FACILITIES
S.E. REGION DESIGN & ENGINEERING SERVICES DIVISION

Angoon Ferry Terminal
Improvements, Re-Bid

Marine Site Plan
Existing & New Structures
ADDENDUM NO. One

PATH: O:\Ang\68502\MF\Specs\Rebid 3-10\06 Marine Site Plan – Existing & New Structures_Addend
PLOT: PSPACE 1=1 Tab: Existing & New Structures Fri, 21/May/10 08:54AM

REVISIONS			PROJECT DESIGNATION	YEAR	SHEET NO	TOTAL SHEETS
NO.	DATE	DESCRIPTION	68502	2010	6	72

Pile Data

Structure	Pile	Size	Pile Anchoring	Required Strength (kips)		Elevation (ft)			Est. Length (ft)			
				Uplift	Bearing	Est. Tip	Est. Mudline	Cutoff	20x1/2	24x1/2	24x3/4	30x1/2
N1	King	30x1/2	Tension Anchor	310	310	-45	-15	+24.00	–	–	–	69
	Batter 1	20x1/2	Tension Anchor	250	250	-35	-13	+28.50	67	–	–	–
	Batter 2	20x1/2	Tension Anchor	250	250	-35	-12	+28.50	67	–	–	–
N2	King	30x1/2	Tension Anchor	310	310	-55	-17	+24.00	–	–	–	79
	Batter 1	20x1/2	Tension Anchor	250	250	-55	-15	+28.50	88	–	–	–
	Batter 2	20x1/2	Tension Anchor	250	270	-75	-12	+28.50	109	–	–	–
N3	Fender	24x3/4	Rock Socket	–	–	-80*	-18	53.50	–	–	134	–
	Vertical 1	24x1/2	Tension Anchor	250	280	-65	-17	38.73	–	104	–	–
	Vertical 2	24x1/2	Tension Anchor	250	280	-65	-17	38.73	–	104	–	–
	Batter 1	24x1/2	Tension Anchor	210	390	-75	-11	45.81	–	127	–	–
	Batter 2	24x1/2	Tension Anchor	210	390	-75	-11	45.81	–	127	–	–
N4	King	30x1/2	Tension Anchor	310	390	-70	-22	+13.00	–	–	–	83
	Batter 1	20x1/2	Tension Anchor	250	390	-75	-13	+21.00	101	–	–	–
	Batter 2	20x1/2	Tension Anchor	250	390	-75	-16	+21.00	101	–	–	–
N5	King	30x1/2	Tension Anchor	310	390	-70	-20	+13.00	–	–	–	83
	Batter 1	20x1/2	Tension Anchor	250	390	-75	-15	+21.00	101	–	–	–
	Batter 2	20x1/2	Tension Anchor	250	390	-60	-16	+21.00	85	–	–	–
N6	King	30x1/2	Tension Anchor	310	390	-55	-21	+13.00	–	–	–	68
	Batter 1	20x1/2	Tension Anchor	250	390	-45	-16	+21.00	70	–	–	–
	Batter 2	20x1/2	Tension Anchor	250	390	-45	-17	+21.00	70	–	–	–
N7	Fender	24x3/4	Rock Socket	–	–	-60*	-23	53.50	–	–	114	–
	Vertical 1	24x1/2	Tension Anchor	250	280	-45	-22	38.73	–	84	–	–
	Vertical 2	24x1/2	Tension Anchor	250	280	-45	-22	38.73	–	84	–	–
	Batter 1	24x1/2	Tension Anchor	210	390	-40	-15	45.81	–	79	–	–
	Batter 2	24x1/2	Tension Anchor	210	390	-35	-18	45.81	–	74	–	–
S1	King	30x1/2	Tension Anchor	310	310	-50	-18	+24.00	–	–	–	74
	Batter 1	20x1/2	Tension Anchor	250	250	-35	-17	+28.50	67	–	–	–
	Batter 2	20x1/2	Tension Anchor	250	250	-35	-15	+28.50	67	–	–	–
S2	Vertical 2	30x1/2	Tension Anchor	310	310	-60	-24	+24.00	–	–	–	84
	Batter 1	20x1/2	Tension Anchor	250	270	-75	-20	+28.50	109	–	–	–
	Batter 2	20x1/2	Tension Anchor	250	250	-60	-17	+28.50	93	–	–	–
S3	King	24X3/4	Tension Anchor	340	370	-75	-29	+37.50	–	–	113	–
	Batter 1	20x1/2	Tension Anchor	250	400	-70	-32	+43.50	120	–	–	–
	Batter 2	20x1/2	Tension Anchor	250	400	-60	-27	+43.50	109	–	–	–
								Est. Total Length (ft)	20x1/2: 1,424	24x1/2: 783	24x3/4: 361	30x1/2: 540

Drive all piles to bedrock or practical refusal. Install with tension anchors or rock sockets as indicated. See Plans & Specifications.

* Tip elevation shown assumes fully socketed 24x3/4 pile. Adjust estimated tip elevations and pile lengths accordingly for pin-pile alternate detailed on Sheet 60. Note that, if the pin-pile alternate is chosen, no 16x1/2 piles have been estimated in this table. See specs.

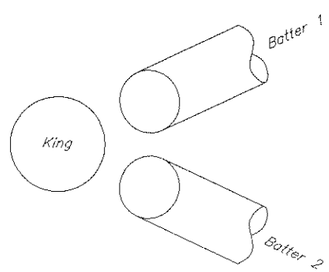

3-pile Structures

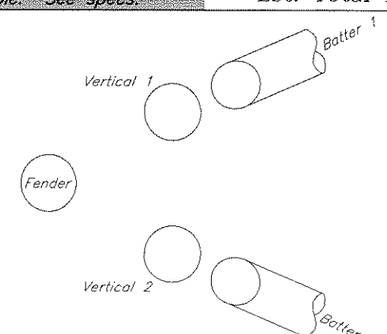

5-pile Structures

DO NOT SCALE FROM THESE DRAWINGS USE DIMENSIONS

DESIGNED BY: Staff

STATE OF ALASKA 49th Kirk D. Miller CE-8550 REGISTERED PROFESSIONAL ENGINEER 3/17/10

CHECKED BY: K. Miller

DRAFTED BY: M. Walters

STATE OF ALASKA
DEPARTMENT OF TRANSPORTATION
& PUBLIC FACILITIES
S.E. REGION DESIGN & ENGINEERING SERVICES DIVISION

Angoon Ferry Terminal
Improvements, Re-Bid

Pile Data

PATH: Q:\Ang\68502\MF\Planset\07 Pile Data.dwg
PLOT: PSPACE 1=1 Tab: Pile Table Fri, 12/Mar/10 10:58AM

REVISIONS NO.	DATE	DESCRIPTION	PROJECT DESIGNATION	YEAR	SHEET NO.	TOTAL SHEETS
			68502	2010	7	72

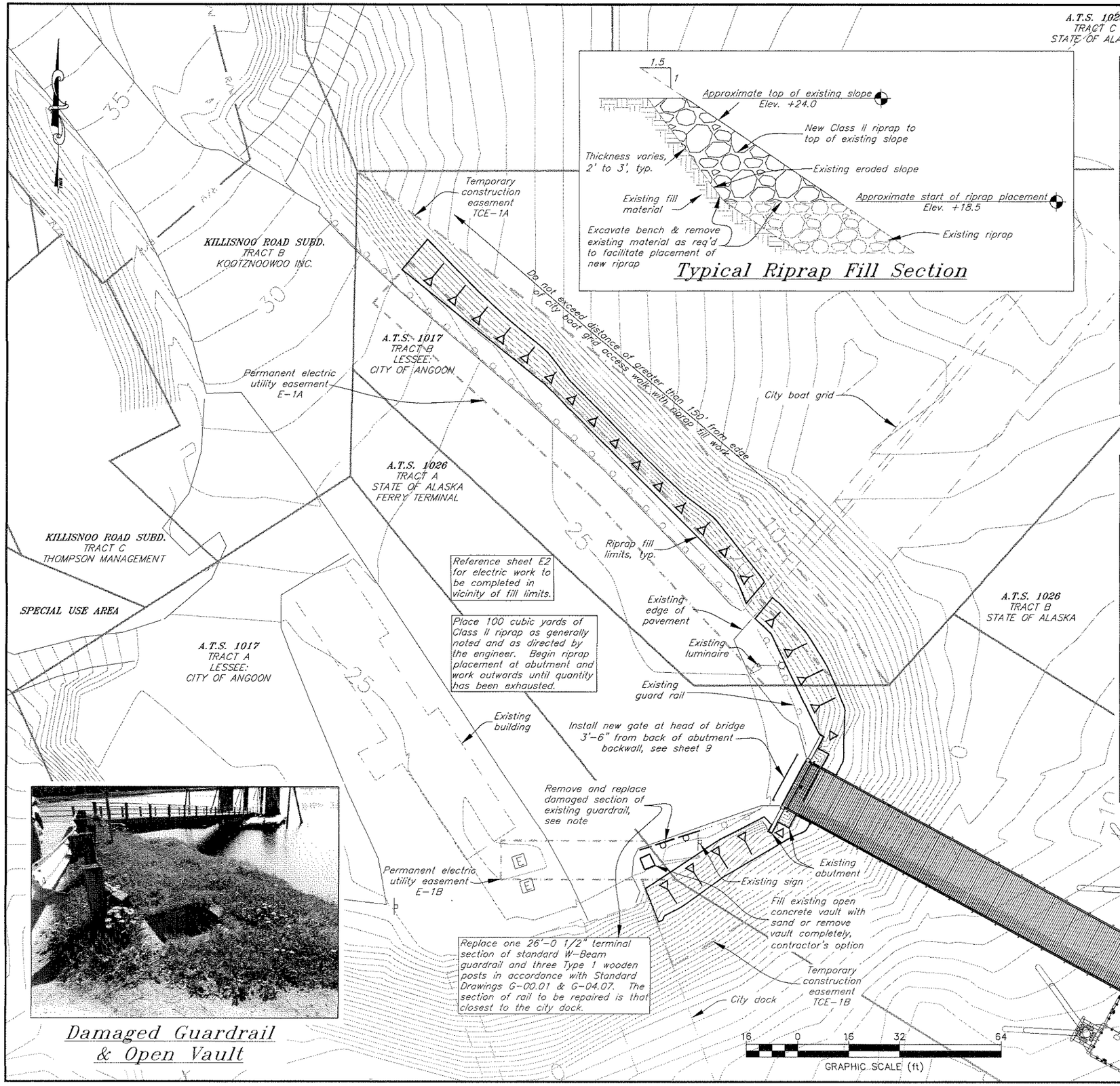

Typical Riprap Fill Section

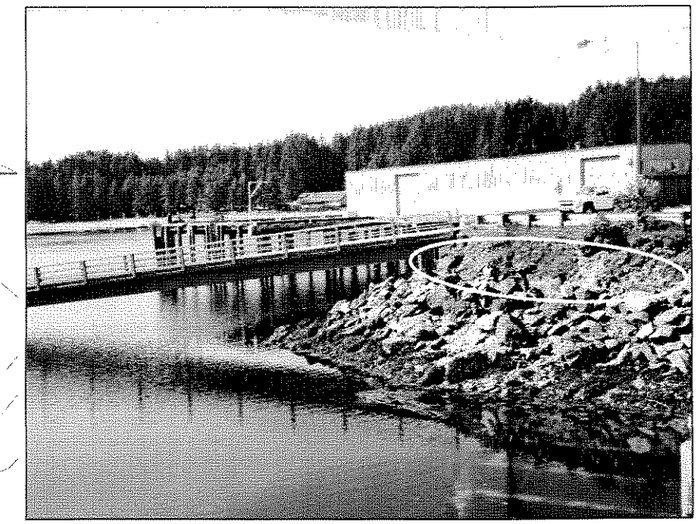

North Side of Abutment

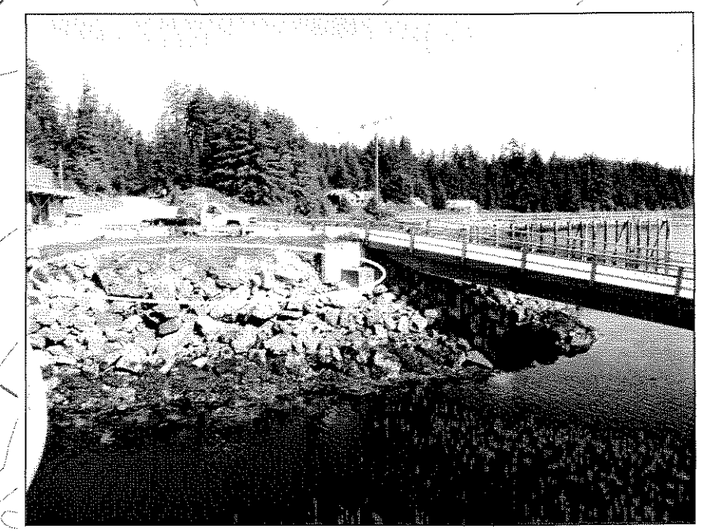

South Side of Abutment

Damaged Guardrail & Open Vault

DO NOT SCALE FROM THESE DRAWINGS USE DIMENSIONS

DESIGNED BY: Staff

STATE OF ALASKA 49th Kirk D. Miller CE-8550 REGISTERED PROFESSIONAL ENGINEER

3/17/10

CHECKED BY: K. Miller

DRAFTED BY: M. Walters

STATE OF ALASKA
DEPARTMENT OF TRANSPORTATION
& PUBLIC FACILITIES
S.E. REGION DESIGN & ENGINEERING SERVICES DIVISION

Angoon Ferry Terminal Improvements, Re-Bid

Miscellaneous Uplands Improvements

PATH: Q:\Ang\68502\MF\Planset\C8 Shore Protection Repair & Bridge Head Gate Placement.dwg

PLOT: PSPACE 1=1 Tab: Riprap & Gate Placement Fri, 12/Mar/10 02:40PM

REVISIONS			PROJECT DESIGNATION	YEAR	SHEET NO.	TOTAL SHEETS
NO.	DATE	DESCRIPTION	68502	2010	8	72

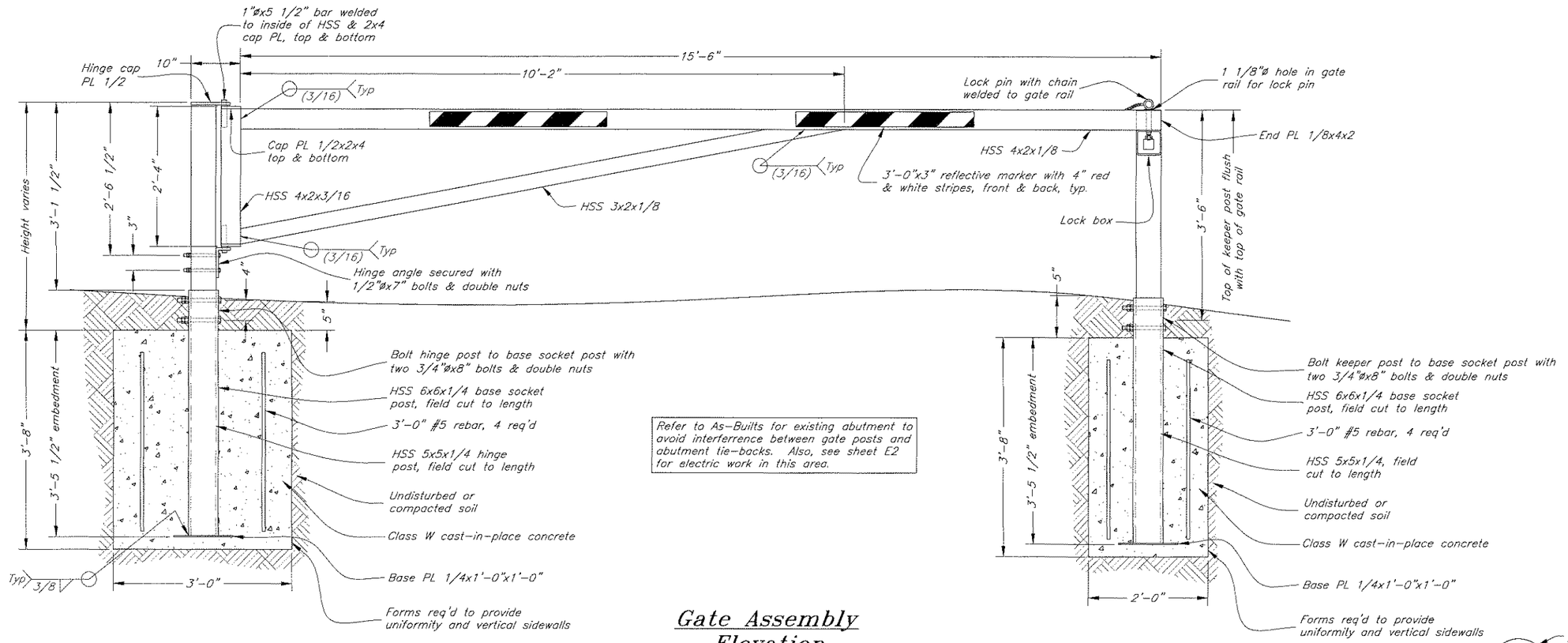

Refer to As-Builts for existing abutment to avoid interferrence between gate posts and abutment tie-backs. Also, see sheet E2 for electric work in this area.

Gate Assembly Elevation

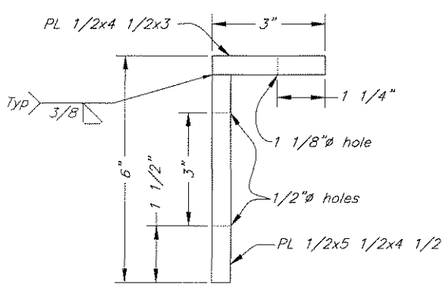

Side Elevation Hinge Angle

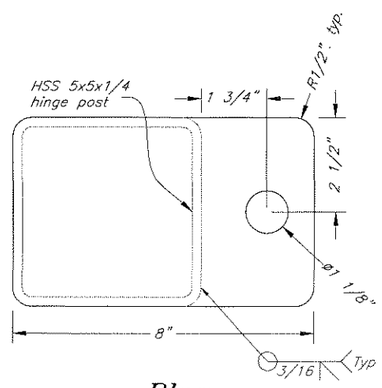

Plan Hinge Cap PL 1/2

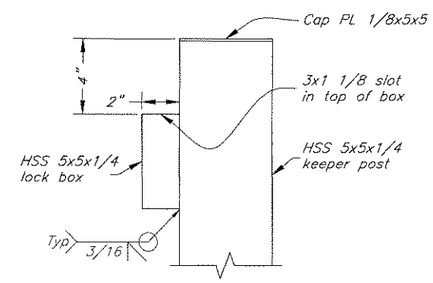

Side Elevation Lock Box

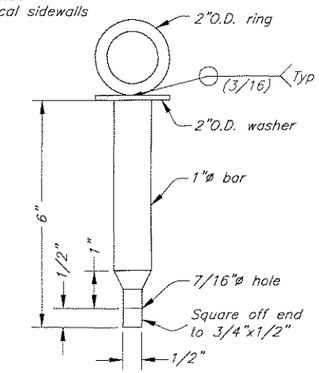

Lock Pin

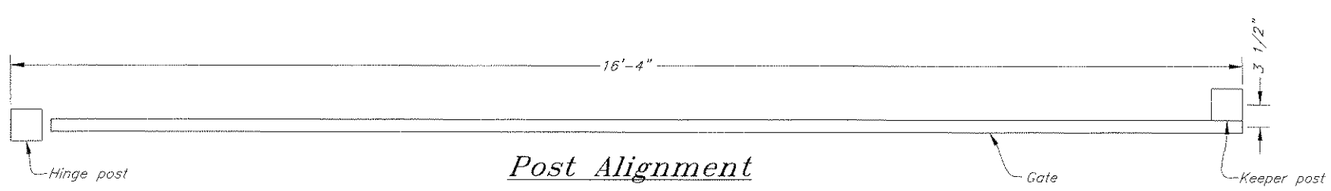

Post Alignment

DO NOT SCALE FROM THESE DRAWINGS USE DIMENSIONS

DESIGNED BY: Staff

STATE OF ALASKA 49th Kirk D. Miller CE-8556 REGISTERED PROFESSIONAL ENGINEER 3/17/10

CHECKED BY: T. Doggett
DRAFTED BY: M. Wolfers

STATE OF ALASKA
DEPARTMENT OF TRANSPORTATION
& PUBLIC FACILITIES
S.E. REGION DESIGN & ENGINEERING SERVICES DIVISION

Angoon Ferry Terminal Improvements, Re-Bid

Bridge Head Gate

PATH: O:\Ang\68502\MF\Planset\09 Bridge Head Gate.dwg
PLOT: PSPACE 1=1 tab: Gate Fri, 12/Mar/10 11:00AM

REVISIONS NO.	DATE	DESCRIPTION	PROJECT DESIGNATION	YEAR	SHEET NO.	TOTAL SHEETS
			68502	2010	9	72

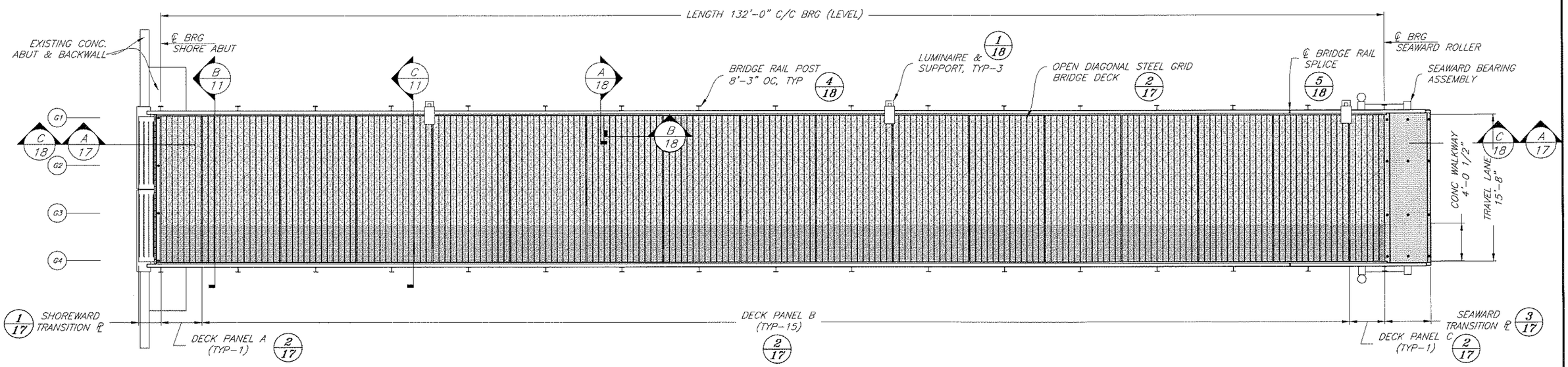

Plan

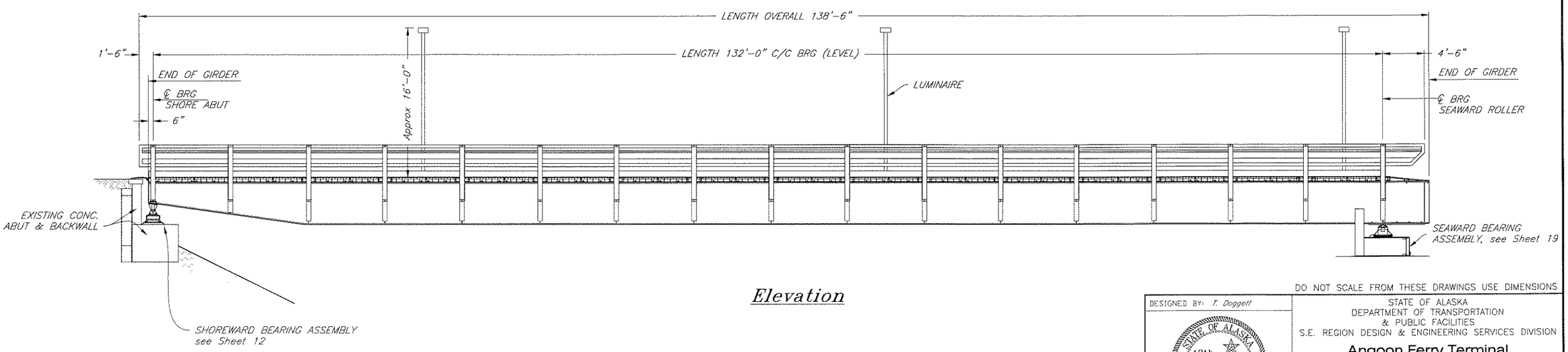

Elevation

DO NOT SCALE FROM THESE DRAWINGS USE DIMENSIONS

DESIGNED BY: T. Doggett

STATE OF ALASKA 49th Timothy H. Doggett CE-9027 REGISTERED PROFESSIONAL ENGINEER 3-12-10

CHECKED BY: T. Arndt

DRAFTED BY: T. Doggett

STATE OF ALASKA
DEPARTMENT OF TRANSPORTATION
& PUBLIC FACILITIES
S.E. REGION DESIGN & ENGINEERING SERVICES DIVISION

Angoon Ferry Terminal Improvements, Re-Bid

132' Transfer Bridge General Plan & Elevation

PATH: Q:\Ang\68502\MF\Planset\10 Bridge Plan & Elev.dwg

PLOT: PSPACE 1=1 Tab: PLAN & ELEVATION Fri, 12/Mar/10 11:02AM

REVISIONS			PROJECT DESIGNATION	YEAR	SHEET NO.	TOTAL SHEETS
NO.	DATE	DESCRIPTION	68502	2010	10	72

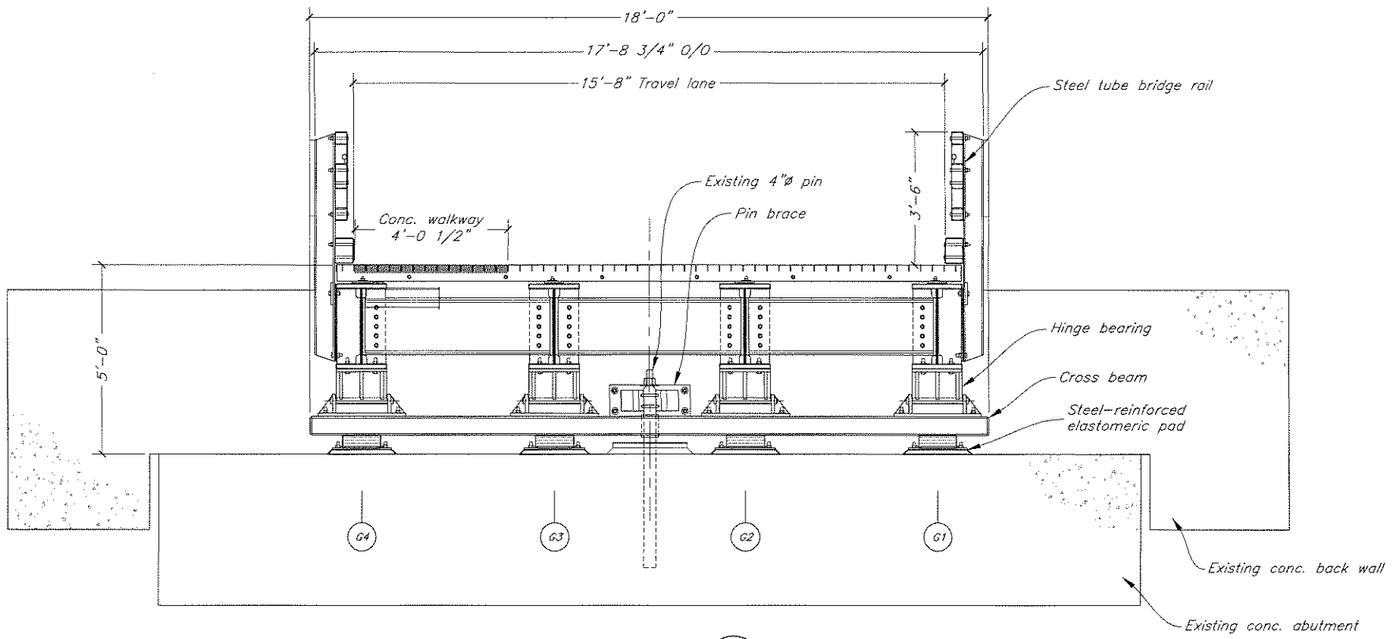

Section B/10

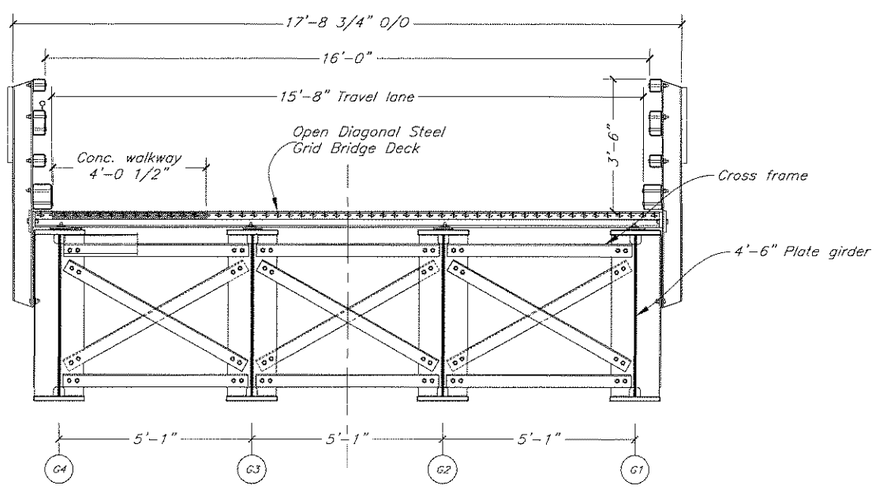

Section C/10

NOTES: Following notes apply to Transfer Bridge, Platform, Ramp, and Apron assemblies

DESIGN SPECIFICATIONS:

AASHTO LRFD Bridge Design Specifications 4th Ed./2007 with 2008 Interim Revisions
AISC Steel Construction Manual 13th Ed. LRFD

DESIGN BASIS:

Live load - HL-93
Basic wind speed - Vfm = 100 mph
Snow = 70 psf (ramp only)
Multiple presence factor = 1.08 (ADTT<100)
Dynamic allowance = 1.33 Live, 1.15 Fatigue
Deflection criteria - LL deflection < Span/800
As (Site Class E) = 0.356 g

MATERIALS: All structural steel shall be produced domestically.

I-Girder flanges & web	ASTM A709 Gr50
Stiffeners, connection plates, and misc. plate	ASTM A709 Gr36
Cross frames, diaphragms, lateral bracing	ASTM A709 Gr36
W-Sections	ASTM A992
Hollow Structural Sections	ASTM A500 GrB
Pipe	ASTM A53 GrB, API 5L-X42 PSL 1
Hex head bolts, washers & nuts	ASTM A325 Type I, F436, & A563
Round head bolts, washers & nuts	ASTM A307
Countersunk head bolts, washers & nuts	ASTM A449 Type I, F436, & A563
Welded studs, plate washers, & nuts	ASTM A276, Type 316L (stainless steel)
5-3/16" deep open grid diagonal steel deck with main rail spacing of 7 1/2" OC	ASTM A709 Gr50

CHARPY V-NOTCH:

Design drawings identify the main load carrying members. All structural steel as designated on the Plans shall receive Charpy V-Notch testing for Temperature Zone 2 in accordance with ASTM A709 as noted below:

1. Tension components of redundant members, designated "T" on the Plans, shall be tested in accordance with Table 8 of ASTM A709.
2. Tension components of fracture critical members, designated "F" on the Plans, shall be tested in accordance with Table 9 of ASTM A709.
3. Non-tension components or secondary members are unmarked and do not require impact testing.

STEEL FABRICATION:

Fabricators of structural steel shall have AISC Major Steel Bridge (CBR) certification. Fracture Critical Endorsement is required for fabrication of fracture critical members.

WELDING:

Welding details and the welding operations shall be in accordance with the current edition of the AASHTO/AWS D1.5 Bridge Welding Code. Welding of tubular elements and stainless steels shall be in accordance with the current edition of AWS D1.1 Structural Welding Code - Steel and D1.6 Structural Welding Code - Stainless Steel, respectively. Welding procedures shall be submitted and approved prior to welding on project. Nondestructive testing shall be performed as required by AASHTO/AWS D1.5 Bridge Welding Code.

BOLTED CONNECTIONS:

Unless otherwise noted, all bolted connections shall use 7/8" diameter ASTM A325 bolts installed per the Research Council on Structural Connections (RCSC). High strength bolts shall be pretensioned using load indicating washers. As noted on the Plans, hardened and/or plate washers are required at slotted and oversize holes.

PROTECTIVE COATINGS:

I-Girders shall be spray metallized with Zn or Zn/Al alloy and coated with pigmented sealer system in conformance with Project Specs. (Section 513 - System 10), SSPC-CS 23.00, and AWS C2.18.

Miscellaneous Shapes, Cross frames, Diaphragms, Plates, and Decking shall be hot dip galvanized in conformance with ASTM A123.

The surfaces of transition plates subject to pedestrian traffic shall be coated with non-skid coating in conformance with Project Specs. (Section 513 - System 7A or 7B, as indicated on the Plans).

DO NOT SCALE FROM THESE DRAWINGS USE DIMENSIONS

DESIGNED BY: T. Doggett
STATE OF ALASKA 49th Timothy H. Doggett CE-9027 REGISTERED PROFESSIONAL ENGINEER
3.12.10
CHECKED BY: T. Arndt
DRAFTED BY: T. Doggett

STATE OF ALASKA
DEPARTMENT OF TRANSPORTATION
& PUBLIC FACILITIES
S.E. REGION DESIGN & ENGINEERING SERVICES DIVISION

Angoon Ferry Terminal
Improvements, Re-Bid

132' Transfer Bridge
Typ. Sections & General
Notes

PATH: Q:\Ang\68502\MF\Planset\11 Bridge Sections.dwg
PLOT: PSPACE 1=1 Tab: SECTIONS Fri, 12/Mar/10 01:46PM

REVISIONS			PROJECT DESIGNATION	YEAR	SHEET NO.	TOTAL SHEETS
NO.	DATE	DESCRIPTION	68502	2010	11	72

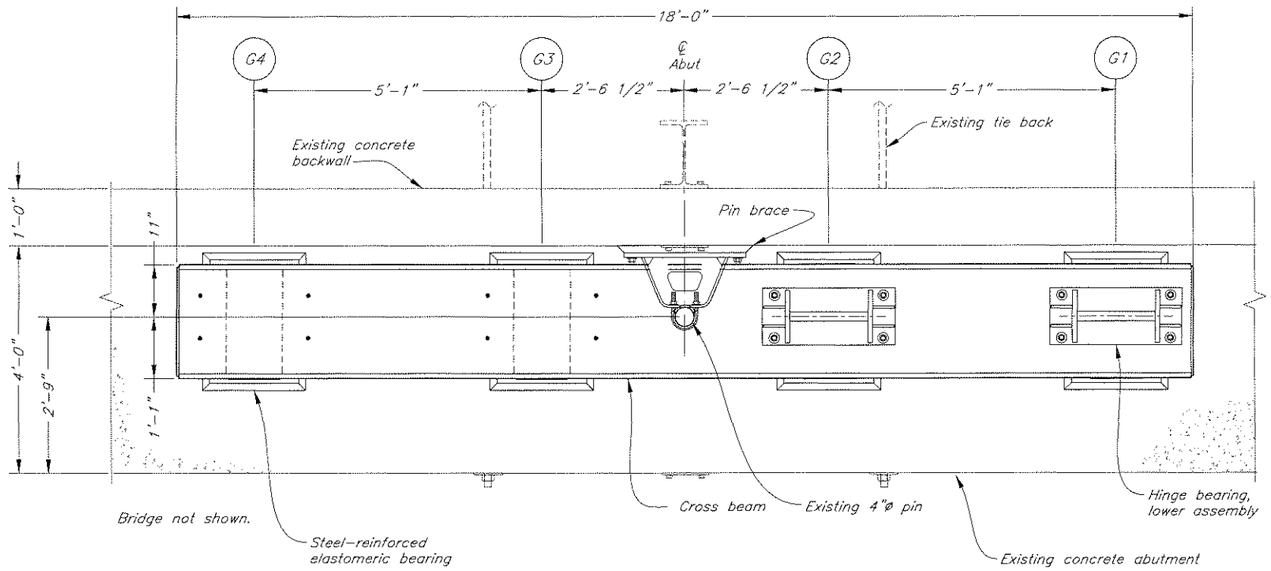

Abutment Bearings Plan

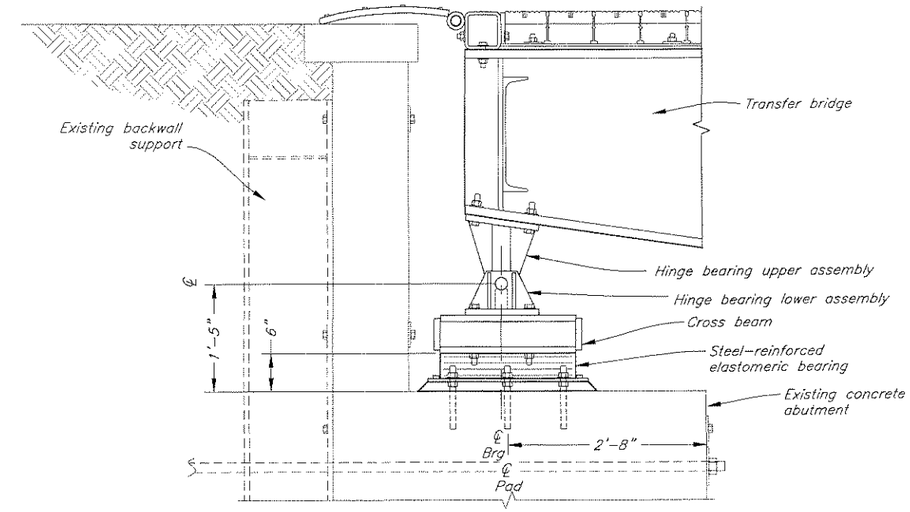

Section A-A

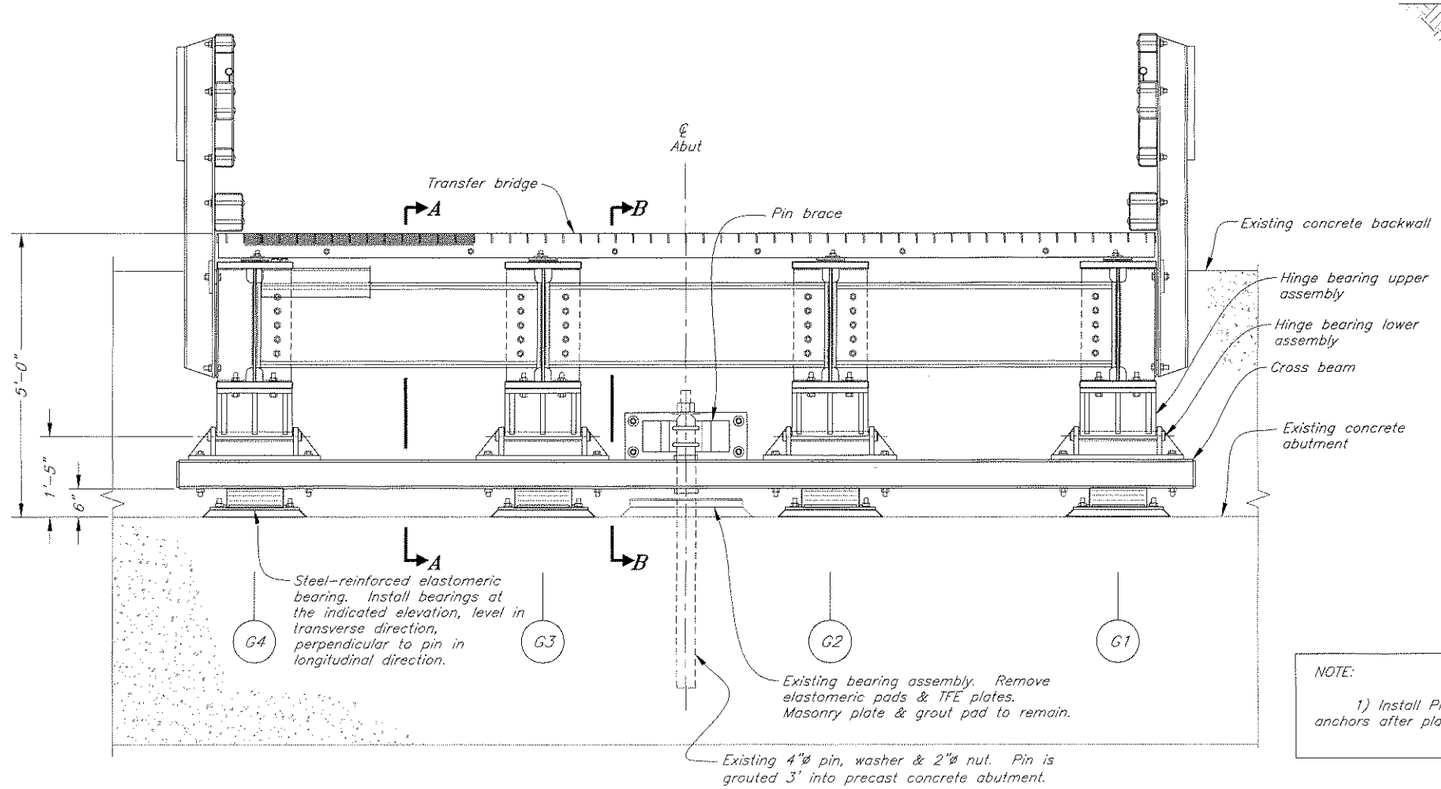

Abutment Bearings Elevation

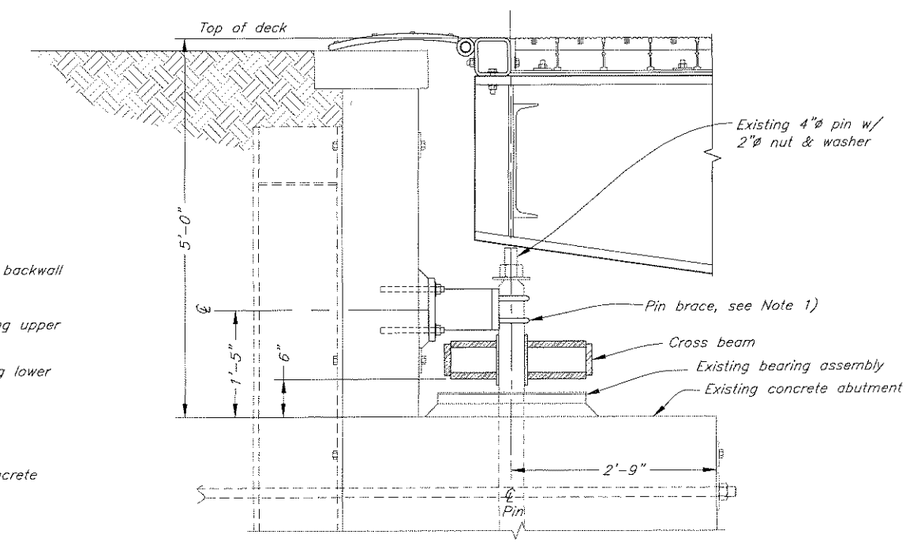

Section B-B

NOTE:

1) Install Pin Brace and adhesive anchors after placing cross beam.

DO NOT SCALE FROM THESE DRAWINGS USE DIMENSIONS

DESIGNED BY: T. Doggett

STATE OF ALASKA 49th Timothy H. Doggett CE-9027 REGISTERED PROFESSIONAL ENGINEER

4.20.10

CHECKED BY: T. Arndt

DRAFTED BY: T Doggett/ C Furman

STATE OF ALASKA
DEPARTMENT OF TRANSPORTATION
& PUBLIC FACILITIES
S.E. REGION DESIGN & ENGINEERING SERVICES DIVISION

Angoon Ferry Terminal Improvements, Re-Bid

Shoreward Bearings

PATH: O:\Ang\68502\MF\Planset\ACAD-12-14 Abutment Bridge Bearings.dwg

PLOT: PSPACE 1=1 Tab: Elev Plan Section Tue, 20/Apr/10 02:24PM

REVISIONS			PROJECT DESIGNATION	YEAR	SHEET NO.	TOTAL SHEETS
NO.	DATE	DESCRIPTION	68502	2010	12	72

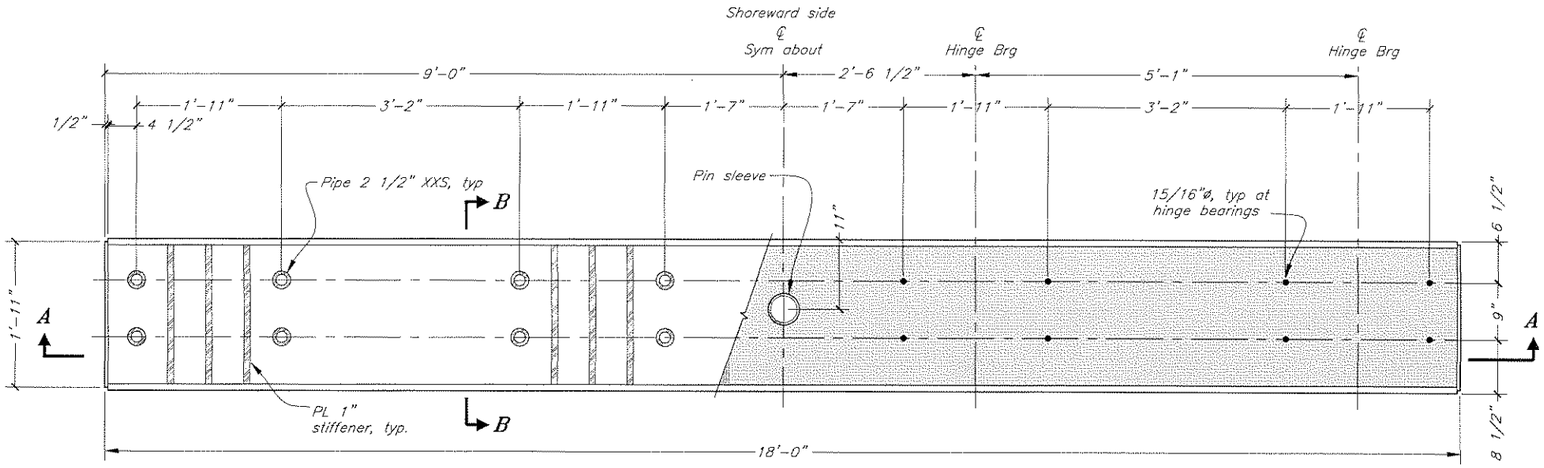

NOTES:

1) Field-installed anchors:
Install adhesive anchors using HILTI brand HIT-RE 500-SD two-component epoxy adhesive, or equivalent, in accordance with the manufacturer's recommended installation instructions, using the recommended mixing dispenser. Anchors are high strength, continuously threaded rod, ASTM A 193 Gr B7, with nuts and washers. Anchors shall be hot dip galvanized. Diameter and minimum embedment shown on the drawings.

Cross Beam Plan

Section View

Top View

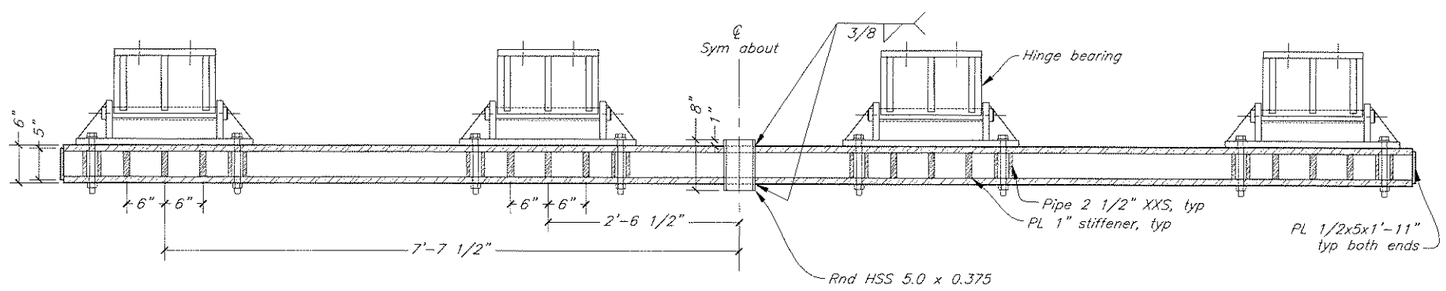

Section A-A

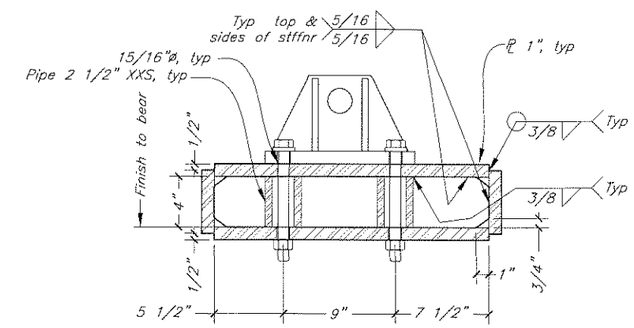

Section B-B

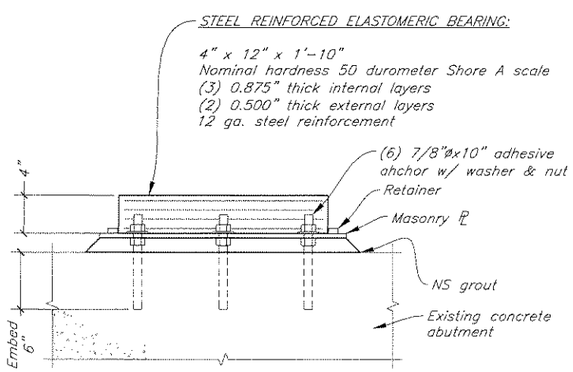

Elevation View

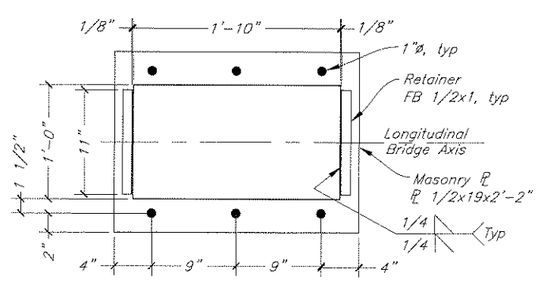

Top View

Set masonry plate and bearing pads as specified in Std Spec. 504-3.02 ERECTION 8. Setting Shoes and Bearings

Steel-Reinforced Elastomeric Bearing

DO NOT SCALE FROM THESE DRAWINGS USE DIMENSIONS

DESIGNED BY: T. Doggett

STATE OF ALASKA
Timothy H. Doggett
CE-9027
49th
REGISTERED PROFESSIONAL ENGINEER
4-20-10

CHECKED BY: T. Arndt
DRAFTED BY: T. Doggett/C. Furman

STATE OF ALASKA
DEPARTMENT OF TRANSPORTATION & PUBLIC FACILITIES
S.E. REGION DESIGN & ENGINEERING SERVICES DIVISION

Angoon Ferry Terminal Improvements, Re-Bid

Shoreward Bearing Details

PATH: Q:\Ang\68502\MF\Planset\ACAD-12-14 Abutment Bridge Bearings.dwg
PLOT: PSPACE 1-1 Tab: Cross Beam & Pads Tue, 20/Apr/10 02:24PM

REVISIONS			PROJECT DESIGNATION	YEAR	SHEET NO.	TOTAL SHEETS
NO.	DATE	DESCRIPTION				
			68502	2010	13	72

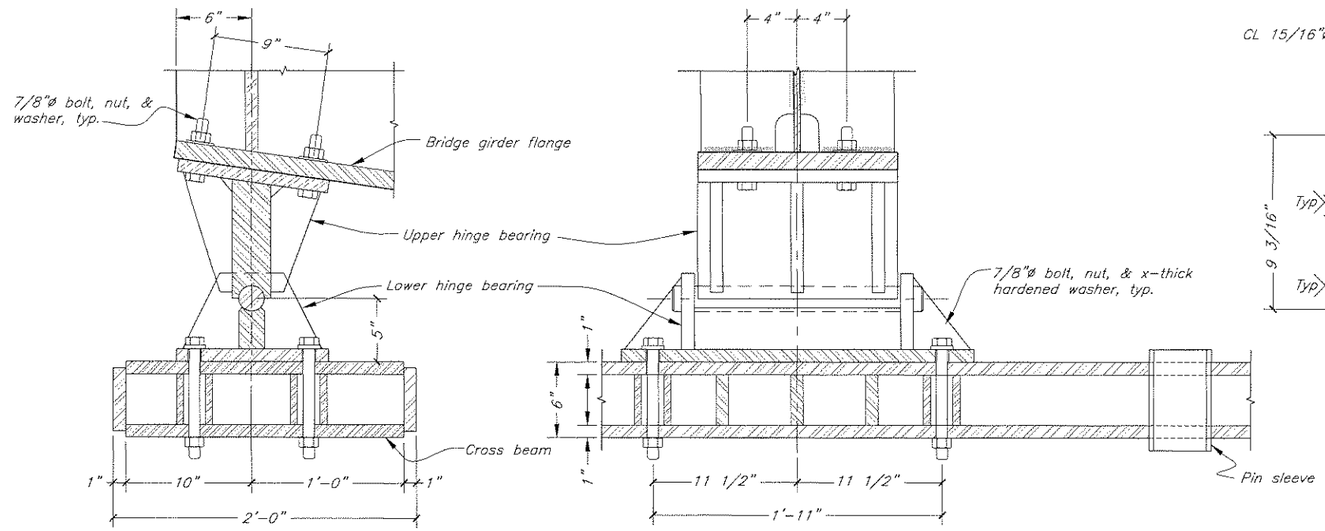

Hinge Bearing Assembly

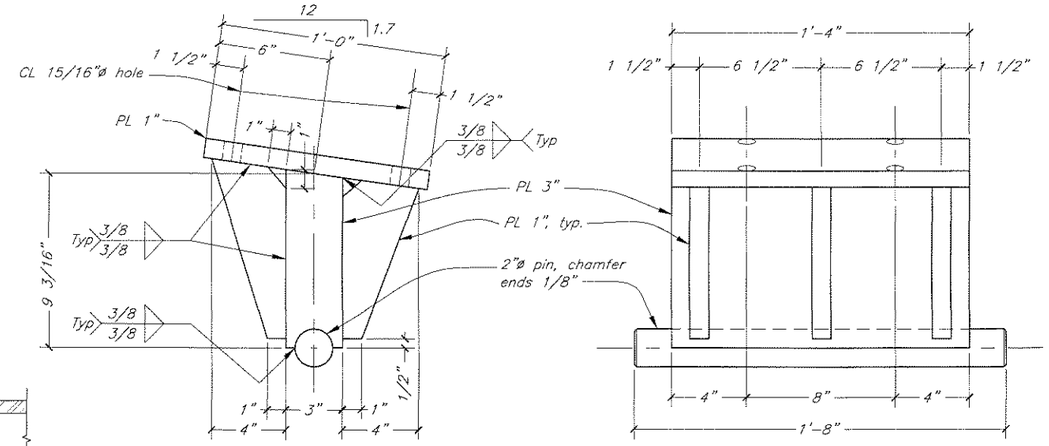

Upper Hinge Bearing

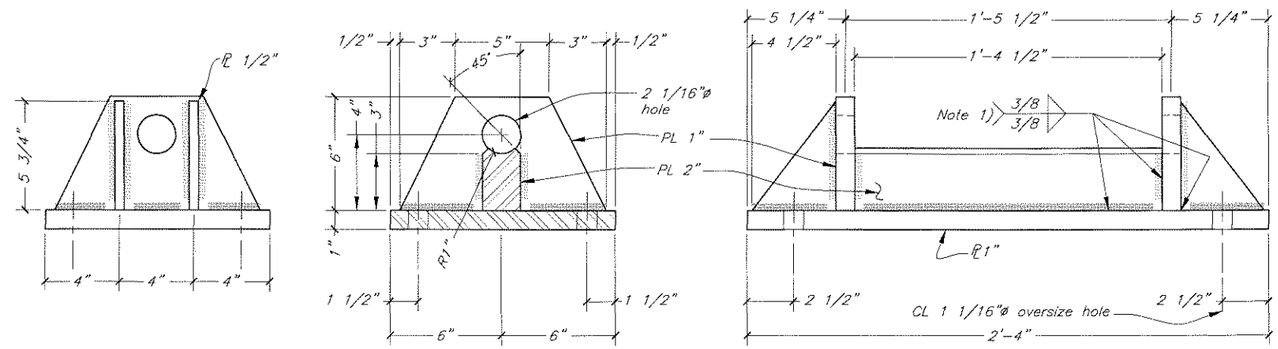

Lower Hinge Bearing

Note
1) Terminate weld 1/2" from inside corner

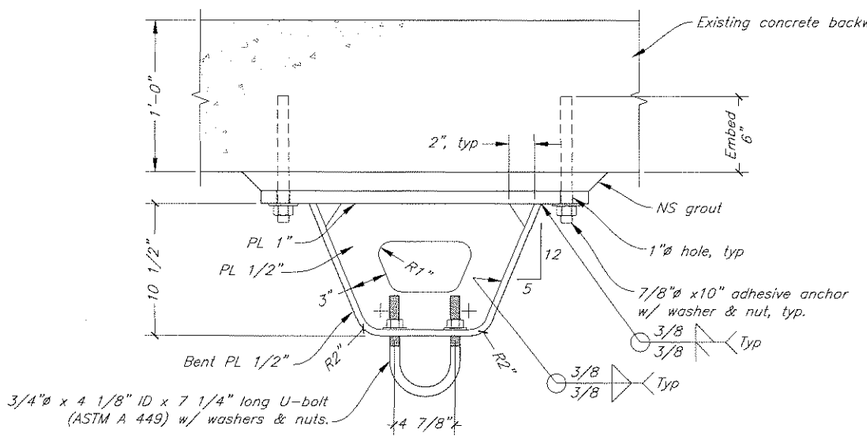

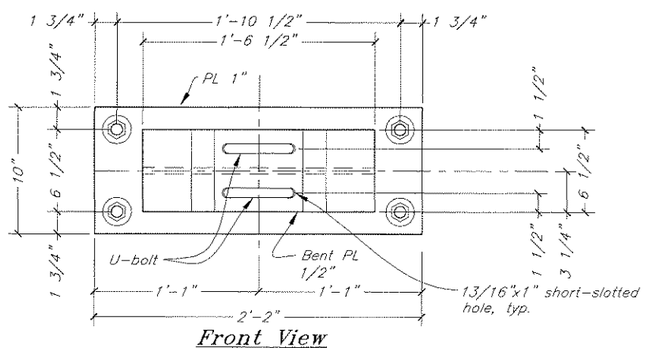

Pin Brace

DO NOT SCALE FROM THESE DRAWINGS USE DIMENSIONS

DESIGNED BY: T. Doggett

STATE OF ALASKA
49th
Timothy H. Doggett
CE-9027
REGISTERED PROFESSIONAL ENGINEER
4-20-10

CHECKED BY: T. Arndt
DRAFTED BY: T Doggett/ C Furman

STATE OF ALASKA
DEPARTMENT OF TRANSPORTATION
& PUBLIC FACILITIES
S.E. REGION DESIGN & ENGINEERING SERVICES DIVISION

Angoon Ferry Terminal
Improvements, Re-Bid

Shoreward Bearing Details 2

PATH: O:\Ang\68502\MF\Planset\ACAD-12--14 Abutment Bridge Bearings.dwg
PLOT: PSPACE 1=1 Tab: Bearing Details Tue, 20/Apr/10 02:24PM

REVISIONS			PROJECT DESIGNATION	YEAR	SHEET NO.	TOTAL SHEETS
NO.	DATE	DESCRIPTION	68502	2010	14	72

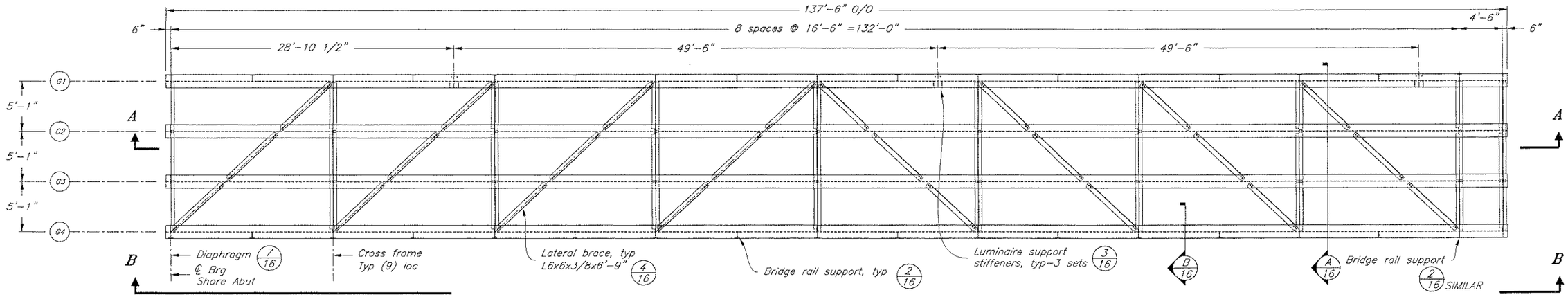

Framing Plan

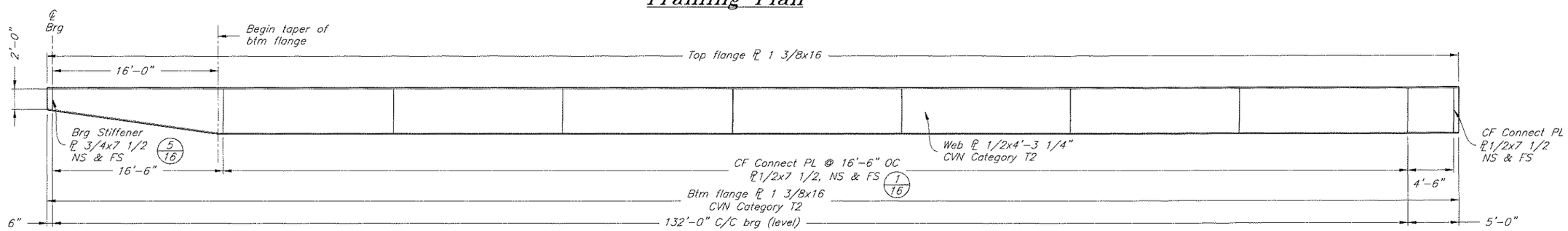

Interior Girder Elevation A-A

TYP G2 & G3

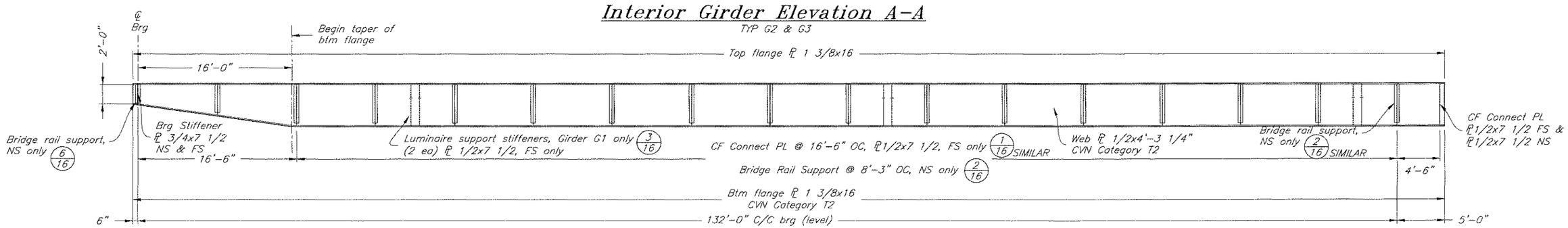

Exterior Girder Elevation B-B

G4 SHOWN, G1 OPP HAND

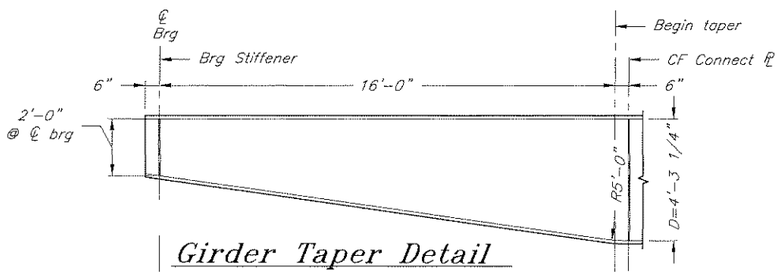

Girder Taper Detail

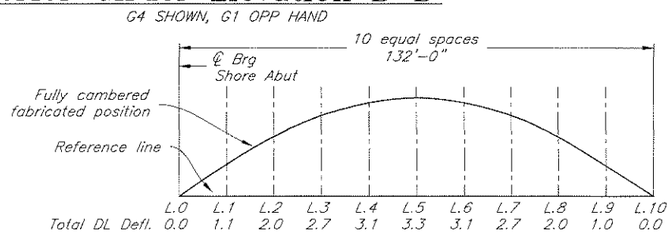

Camber Diagram

1. Splices in girders shall be made by CJP groove welds. Splices between sections of built-up girders shall preferably be made in a single transverse plane. Shop splices of webs and flanges made before the webs and flanges are joined to each other may be located in a single transverse plane or multiple transverse planes. No splices permitted in middle third of span.
2. QC examination of CJP groove welds in butt joints and fillet or PJP groove welds joining primary components of main members shall be in accordance with AWS D1.5 – 6.7.1 and 6.7.2, respectively.
3. All dimensions are shown with bridge level.
4. All brg stiffeners and connection plates are vertical.
5. Girders G1, G2, G3, and G4 are main load carrying members.

DO NOT SCALE FROM THESE DRAWINGS USE DIMENSIONS

DESIGNED BY: T. Doggett

STATE OF ALASKA 49th Timothy H. Doggett CE-9027 REGISTERED PROFESSIONAL ENGINEER 3-12-10

CHECKED BY: T. Arndt

DRAFTED BY: T. Doggett

STATE OF ALASKA
DEPARTMENT OF TRANSPORTATION
& PUBLIC FACILITIES
S.E. REGION DESIGN & ENGINEERING SERVICES DIVISION

Angoon Ferry Terminal
Improvements, Re-Bid

132' Transfer Bridge
Framing Plan & Girder
Elevations

PATH: Q:\Ang\68502\MF\Planset\15 Bridge Framing.dwg
PLOT: PSPACE 1=1 Tab: FRAMING PLAN & GIRDER ELEV Fri, 12/Mar/10 11:07AM

REVISIONS			PROJECT DESIGNATION	YEAR	SHEET NO.	TOTAL SHEETS
NO.	DATE	DESCRIPTION	68502	2010	15	72

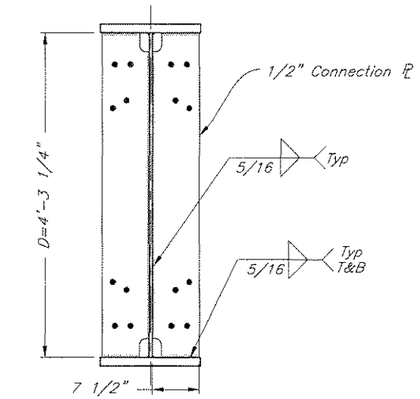

CONNECTION PLATE DETAIL 1/15

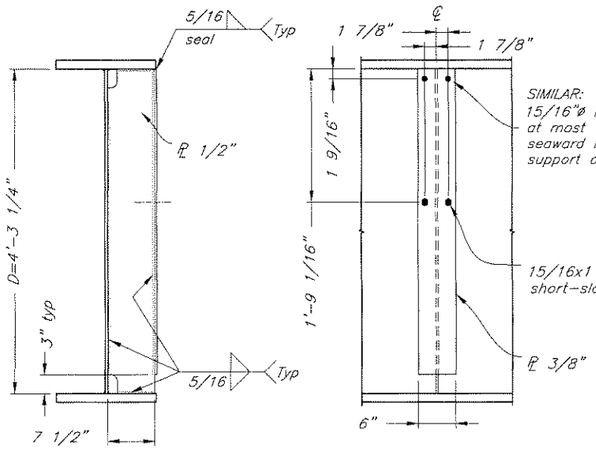

BRIDGE RAIL SUPPORT DETAIL 2/15

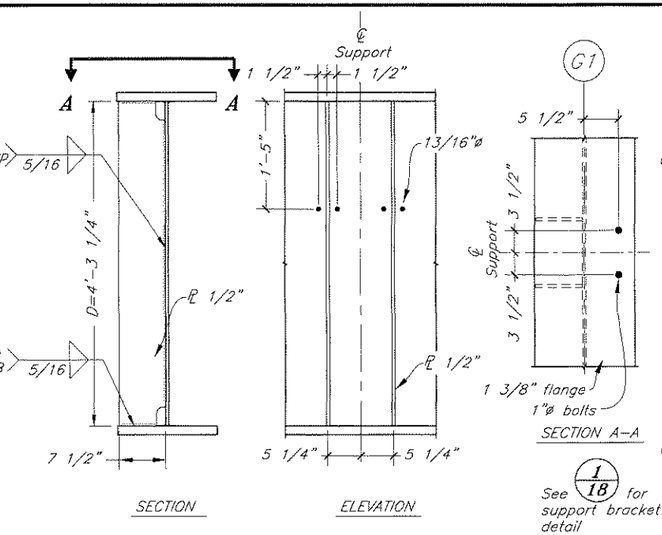

LUMINAIRE SUPPORT DETAIL 3/15

TYP 3 LOCATIONS AT GIRDER G1 ONLY

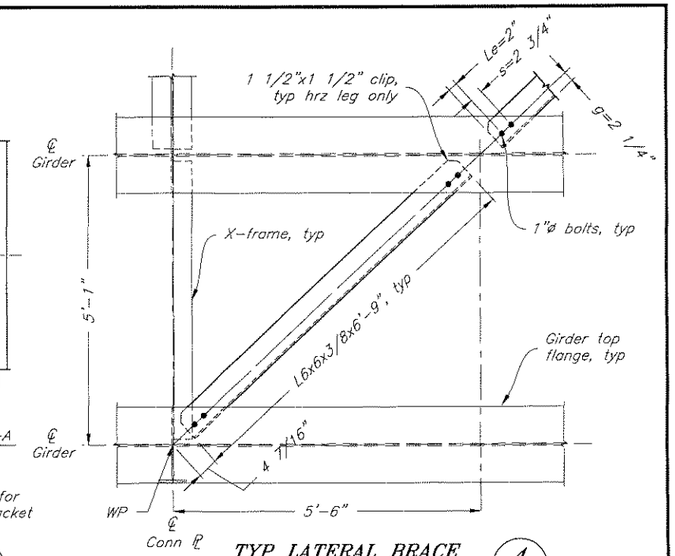

TYP LATERAL BRACE 4/15

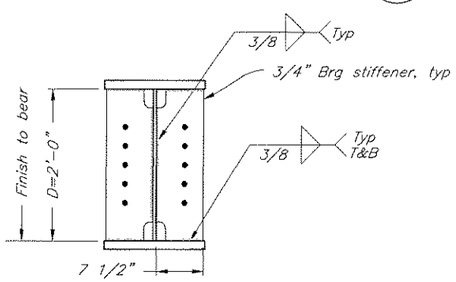

ABUT BEARING STIFFENER DETAIL 5/15

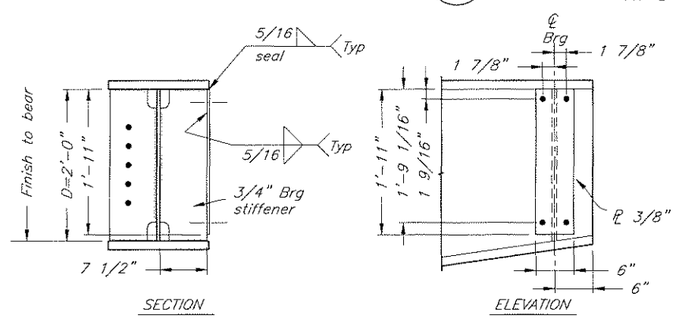

BRIDGE RAIL SUPPORT DETAIL 6/15

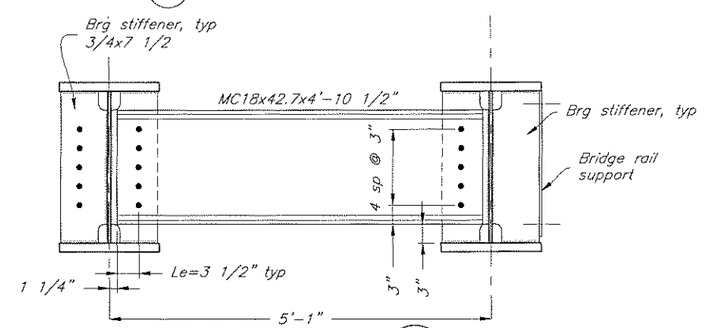

ABUT DIAPHRAGM 7/15

LOOKING TOWARD ABUTMENT

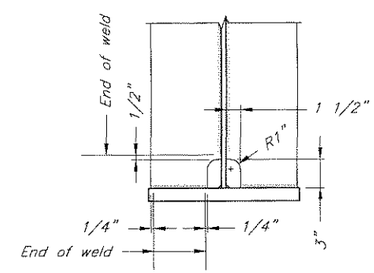

TYP CLIP & WELD TERMINATION DETAIL

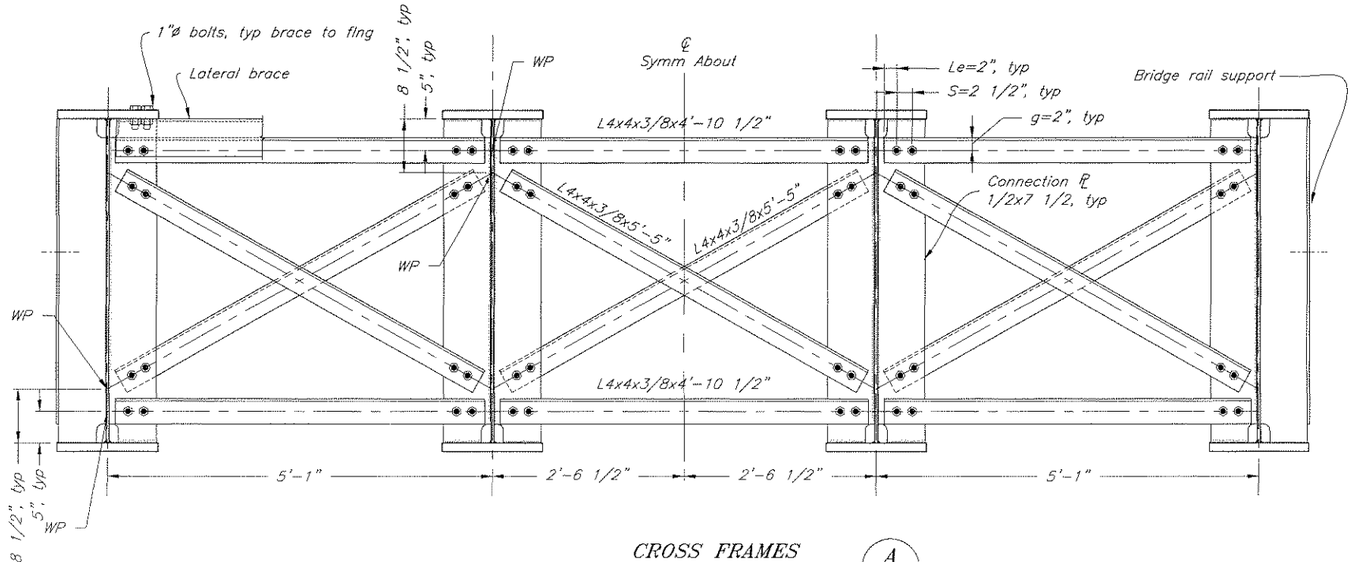

CROSS FRAMES A/15

LOOKING TOWARD ABUTMENT

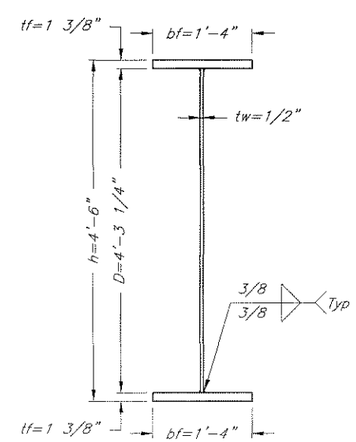

TYP GIRDER SECTION B/15

All bolts are 7/8" diameter in 15/16" diameter holes, unless otherwise noted.

DO NOT SCALE FROM THESE DRAWINGS USE DIMENSIONS

DESIGNED BY: T. Doggett

STATE OF ALASKA 49th Timothy H. Doggett CE-9027 REGISTERED PROFESSIONAL ENGINEER 3-12-10

CHECKED BY: T. Arndt

DRAFTED BY: T. Doggett

STATE OF ALASKA
DEPARTMENT OF TRANSPORTATION
& PUBLIC FACILITIES
S.E. REGION DESIGN & ENGINEERING SERVICES DIVISION

Angoon Ferry Terminal
Improvements, Re-Bid

132 ' Transfer Bridge
Girder Details &
Cross Frames

PATH: Q:\Ang\68502\Mf\Planset\16 Bridge Framing Details.dwg

PLOT: PSPACE 1=1 Tab: SECTIONS & X FRAMES Fri, 12/Mar/10 11:08AM

REVISIONS NO.	DATE	DESCRIPTION	PROJECT DESIGNATION	YEAR	SHEET NO.	TOTAL SHEETS
			68502	2010	16	72

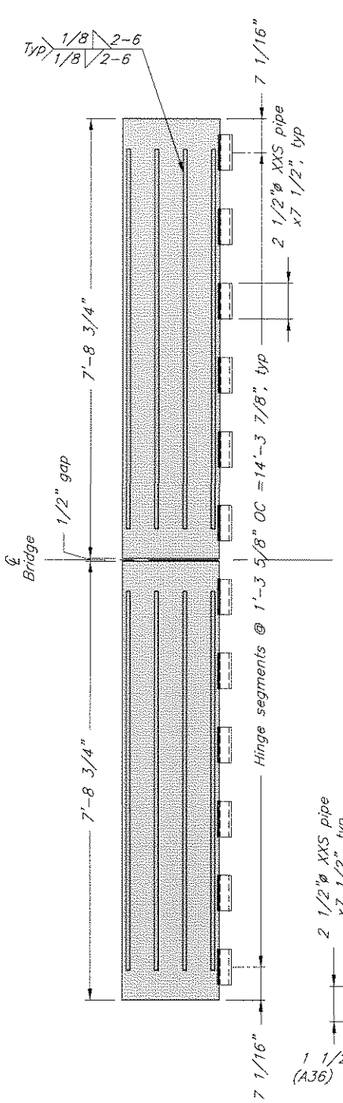

SHOREWARD TRANSITION PL (1/10)

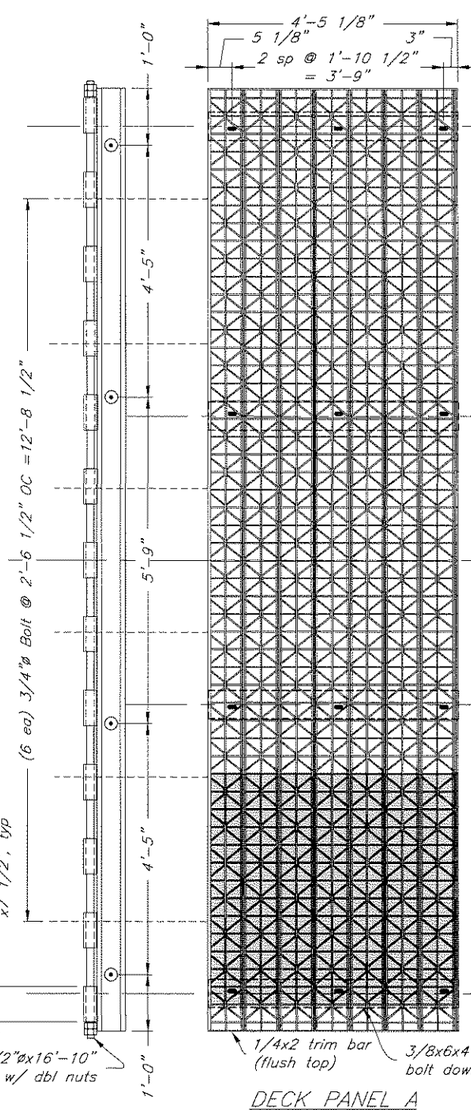

DECK PANEL A

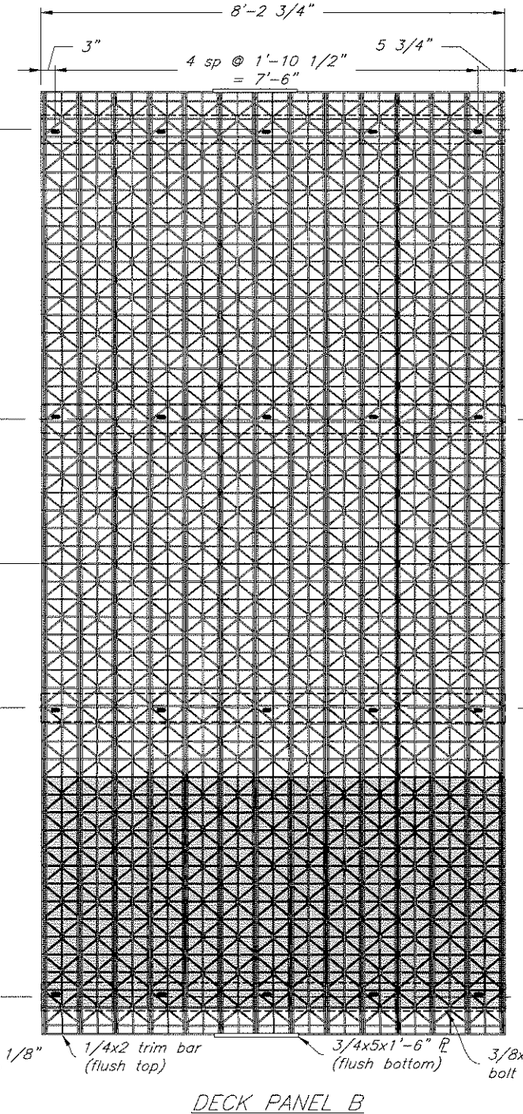

DECK PANEL B

OPEN GRID DECK PANELS (2/10)

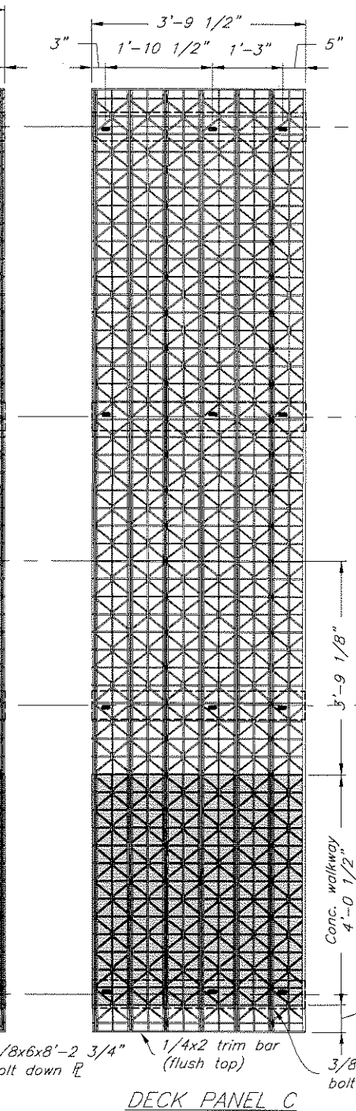

DECK PANEL C

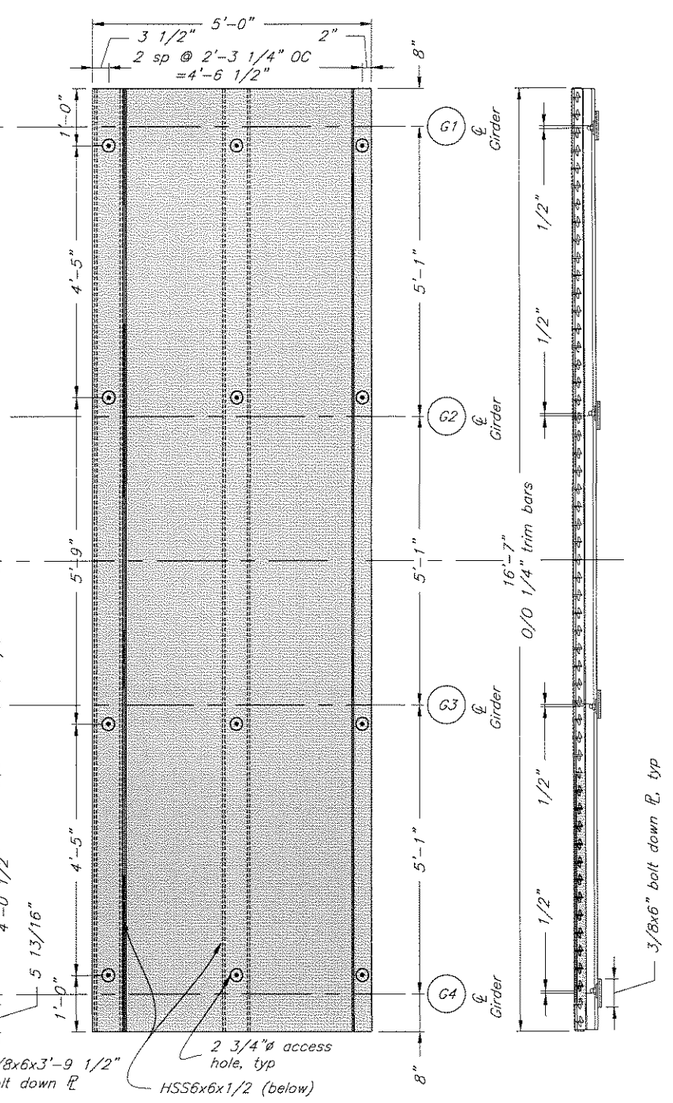

SEAWARD TRANSITION PL (3/10)

TYP SECTION

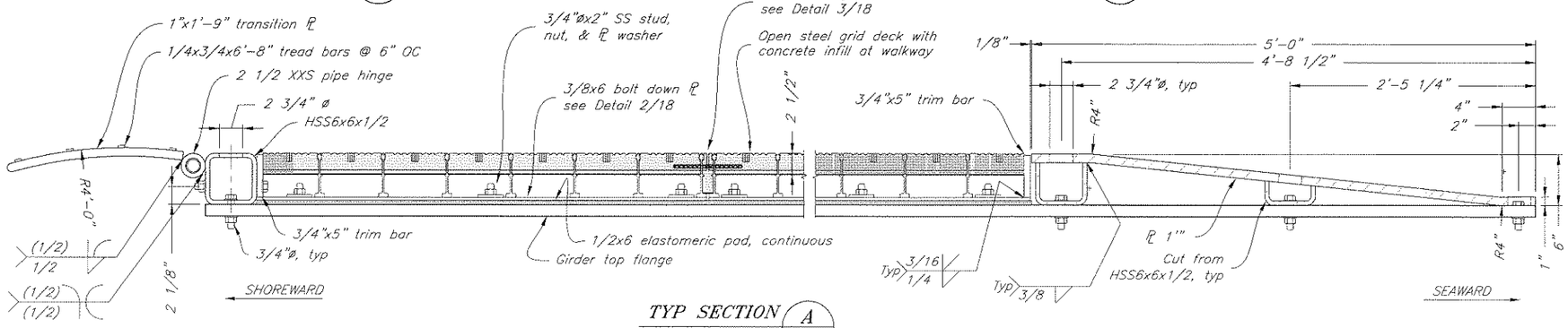

TYP SECTION (A/10)

NOTE:

1. Coat shoreward transition plate with non-skid, Section 513 – System 7A.
2. Coat seaward transition plate with non-skid, Section 513 – System 7B.

DO NOT SCALE FROM THESE DRAWINGS USE DIMENSIONS

DESIGNED BY: T. Doggett

STATE OF ALASKA 49th Timothy R. Doggett CE-9027 REGISTERED PROFESSIONAL ENGINEER 3-12-10

CHECKED BY: T. Arndt

DRAFTED BY: T. Doggett

STATE OF ALASKA
DEPARTMENT OF TRANSPORTATION & PUBLIC FACILITIES
S.E. REGION DESIGN & ENGINEERING SERVICES DIVISION

Angoon Ferry Terminal Improvements, Re-Bid

132 ' Transfer Bridge Transition Plates & Bridge Deck

PATH: O:\Ang\68502\MF\Planset\17 Bridge Deck Panels.dwg

PLOT: PSPACE 1=1 Tab: DECK PANELS Fri, 12/Mar/10 11:13AM

REVISIONS NO.	DATE	DESCRIPTION	PROJECT DESIGNATION	YEAR	SHEET NO.	TOTAL SHEETS
			68502	2010	17	72

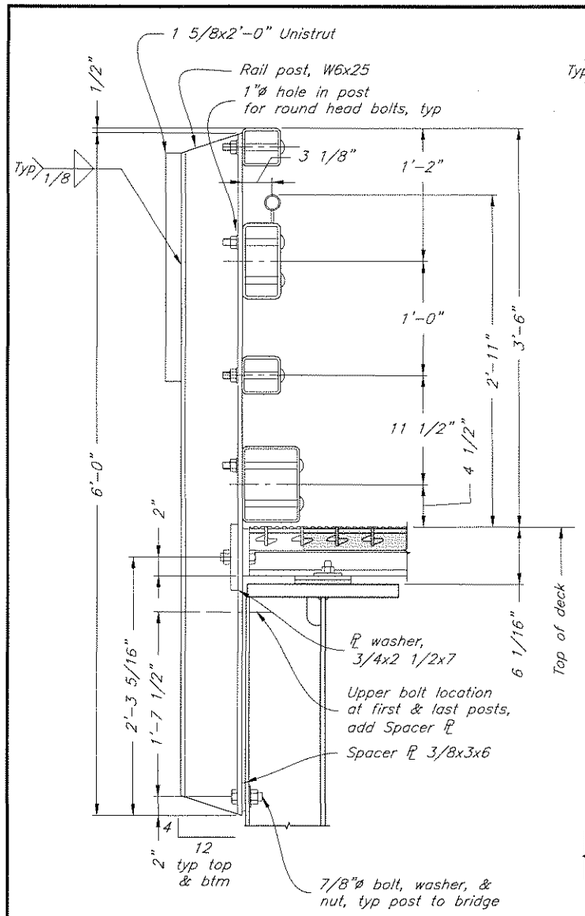

TYP BRIDGE RAIL SECTION A/10

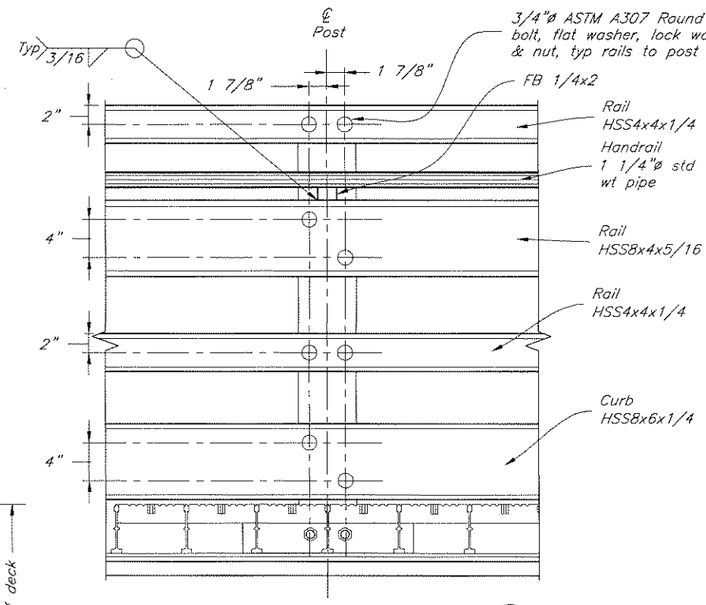

TYP BRIDGE RAIL ELEVATION B/10

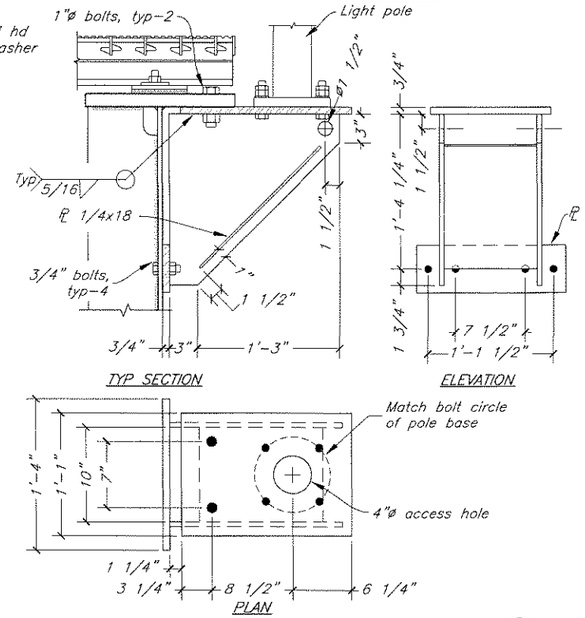

LUMINAIRE SUPPORT BRACKET 1/10

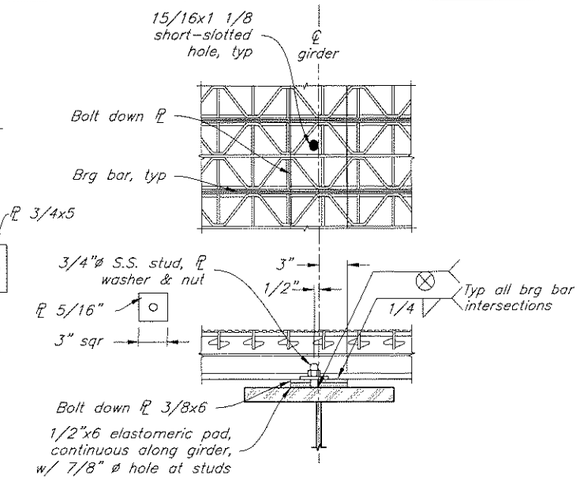

BOLT DOWN PLATE 2/17

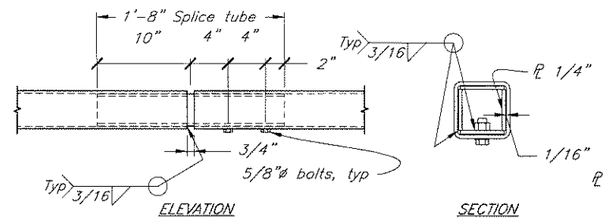

RAIL SPLICE DETAIL 5/10

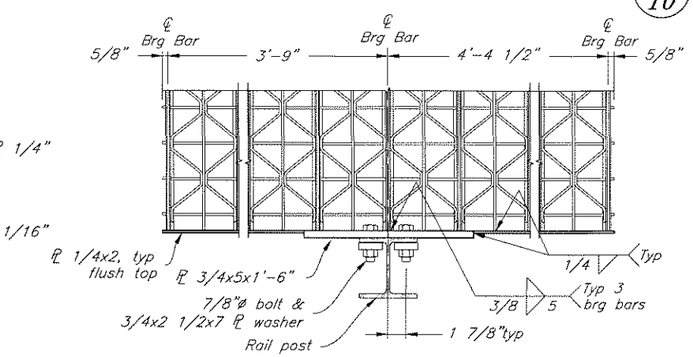

RAIL POST CONNECTION 4/10

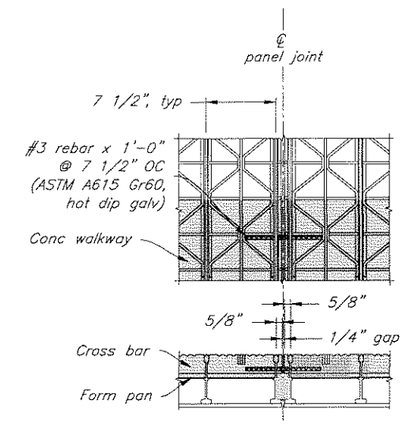

TYP PANEL JOINT 3/17

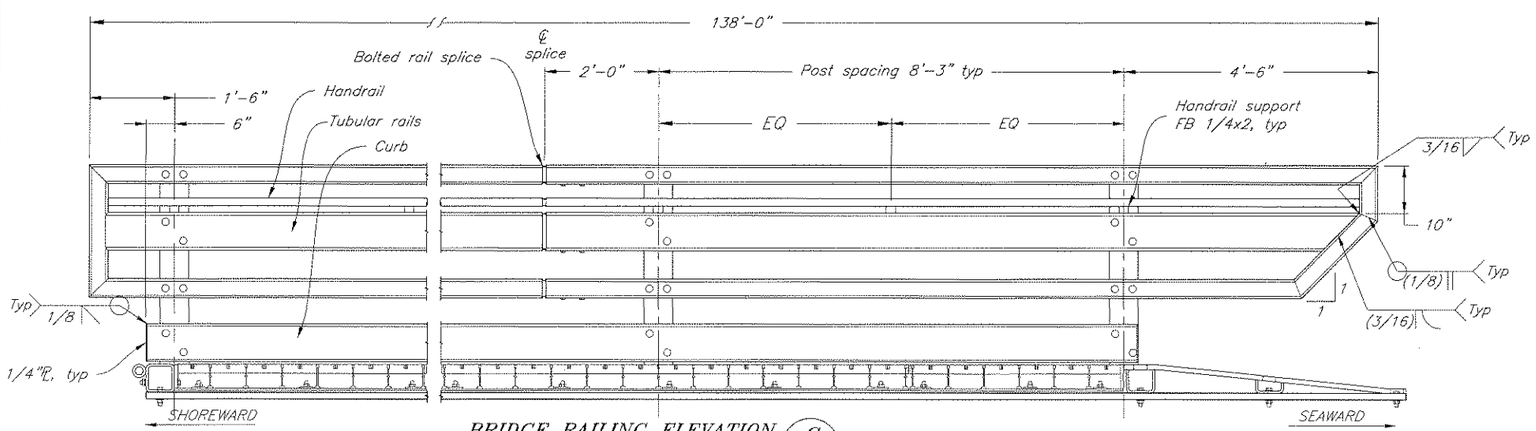

BRIDGE RAILING ELEVATION C/10

ONE AS SHOWN, ONE OPP HAND

NOTES:

1) Contractor may provide optional rail splices at no less than 40' intervals. Railing shall be continuous over 2 posts minimum with joint located 2' from post.

DO NOT SCALE FROM THESE DRAWINGS USE DIMENSIONS

DESIGNED BY: T. Doggett

STATE OF ALASKA 49th Timothy H. Doggett CE-9027 REGISTERED PROFESSIONAL ENGINEER 3-12-10

CHECKED BY: T. Arndt

DRAFTED BY: T. Doggett

STATE OF ALASKA
DEPARTMENT OF TRANSPORTATION & PUBLIC FACILITIES
S.E. REGION DESIGN & ENGINEERING SERVICES DIVISION

Angoon Ferry Terminal Improvements, Re-Bid

132 ' Transfer Bridge Bridge Rail

PATH: O:\Ang\68502\MF\Planset\18 Bridge Rails.dwg
PLOT: PSPACE 1=1 Tab: BRIDGE RAIL Fri, 12/Mar/10 11:14AM

REVISIONS			PROJECT DESIGNATION	YEAR	SHEET NO.	TOTAL SHEETS
NO.	DATE	DESCRIPTION	68502	2010	18	72

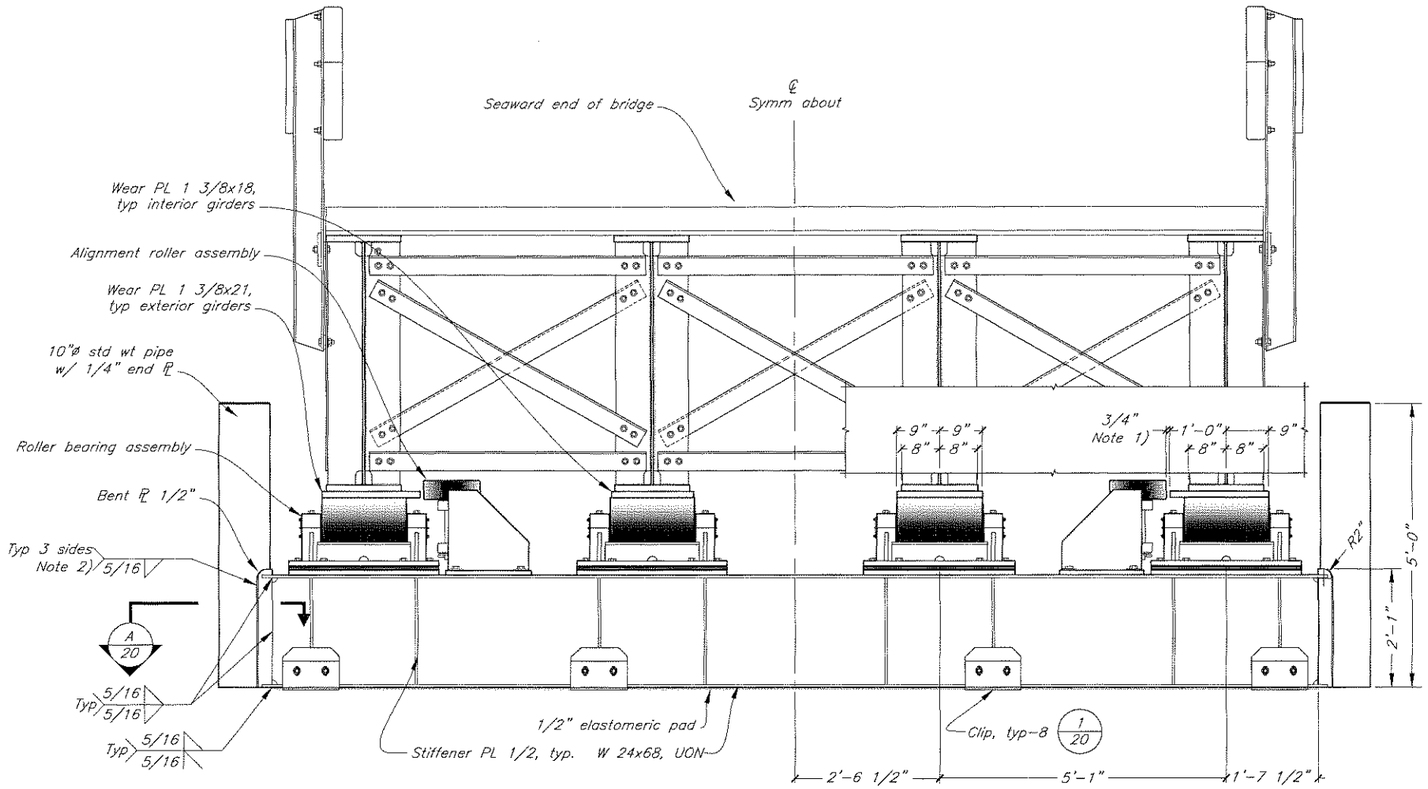

Front Elevation

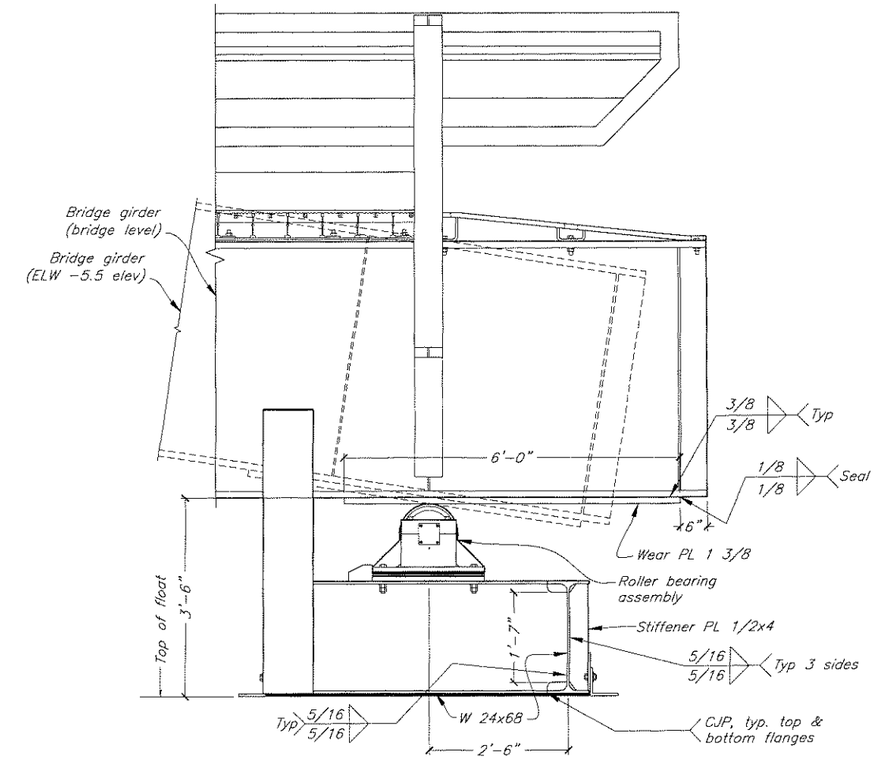

Side Elevation

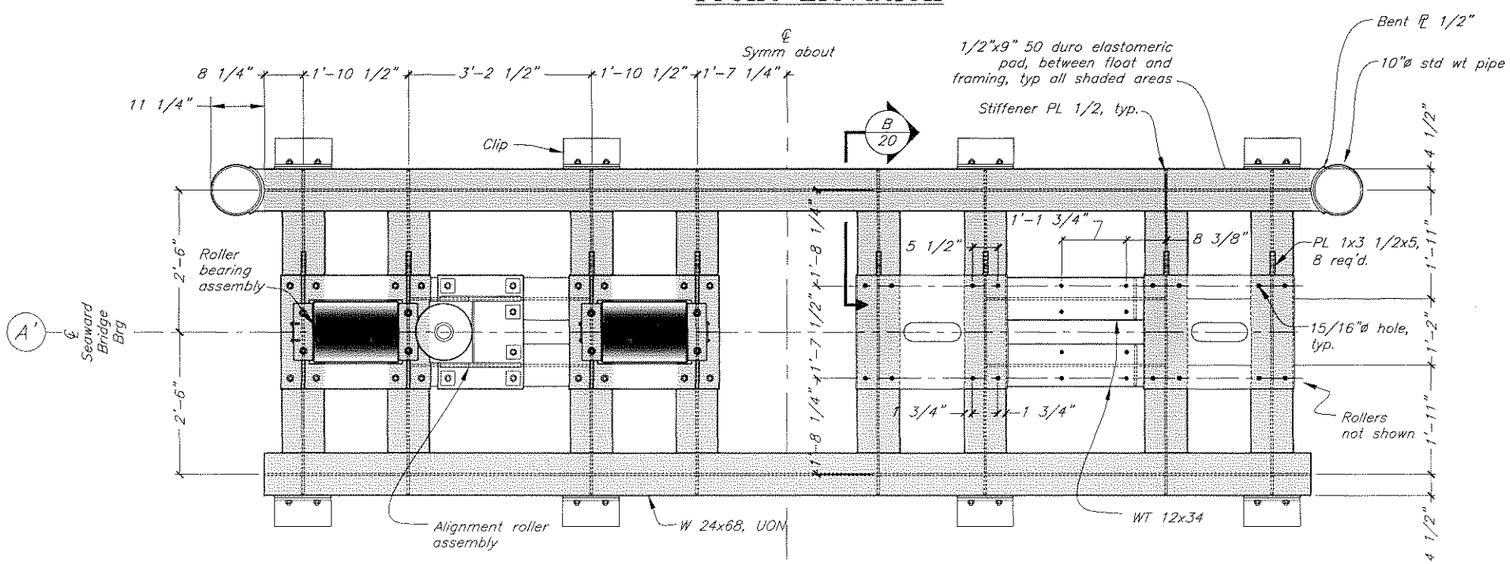

Plan

NOTE:

1) Locate Alignment Roller Assembly as shown after bridge has traveled through several tide cycles.

2) Pipe may be welded to bent plate in the field.

DO NOT SCALE FROM THESE DRAWINGS USE DIMENSIONS

DESIGNED BY: T. Doggett

STATE OF ALASKA 49th Timothy H. Doggett CE-9027 REGISTERED PROFESSIONAL ENGINEER 3-12-10

CHECKED BY: T. Arndt

DRAFTED BY: T. Doggett/C. Fumon

STATE OF ALASKA
DEPARTMENT OF TRANSPORTATION & PUBLIC FACILITIES
S.E. REGION DESIGN & ENGINEERING SERVICES DIVISION

Angoon Ferry Terminal Improvements, Re-Bid

Seaward Bearings

PATH: O:\Ang\68502\MF\Planset\19-20 Seaward Bearings.dwg
PLOT: PSPACE 1=1 Tab: Plan & Elev Fri, 12/Mar/10 11:14AM

REVISIONS			PROJECT DESIGNATION	YEAR	SHEET NO.	TOTAL SHEETS
NO.	DATE	DESCRIPTION	68502	2010	19	72

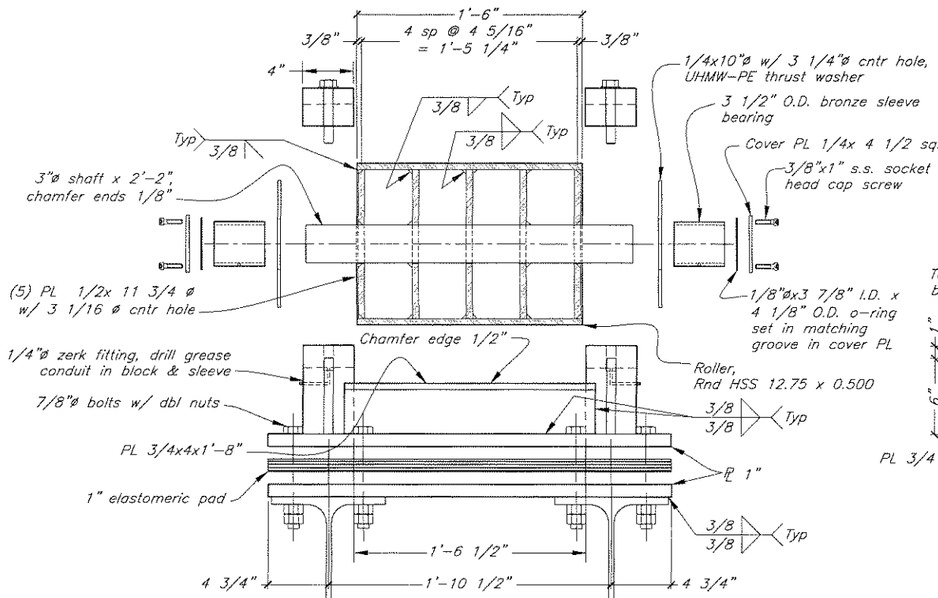

Front Elevation

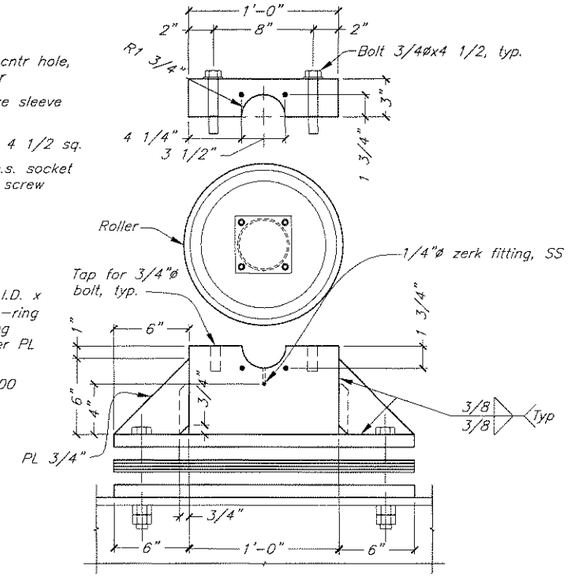

Side Elevation

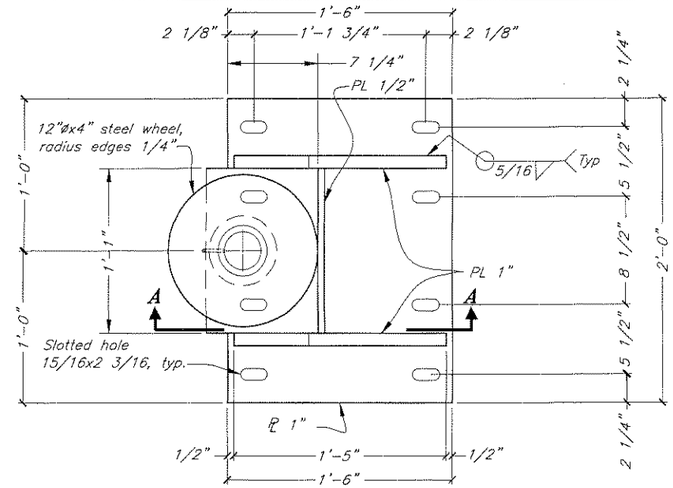

Plan

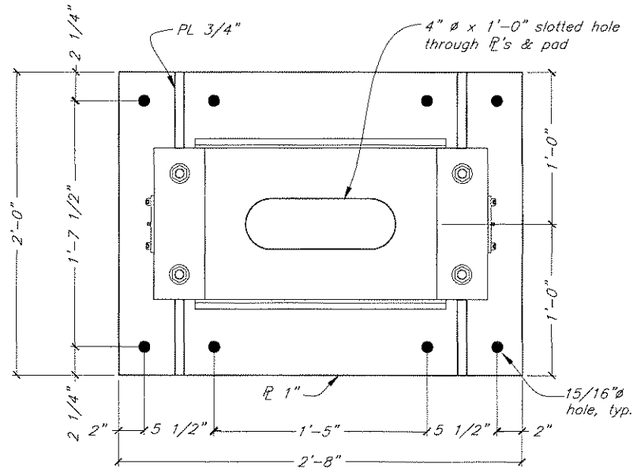

Plan Roller not shown

Roller Bearing Assembly

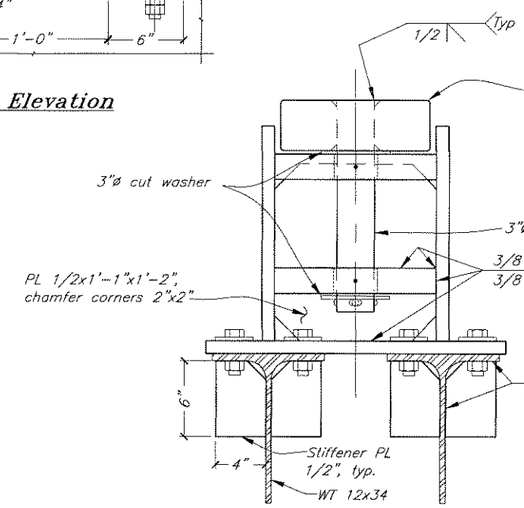

Section B-B

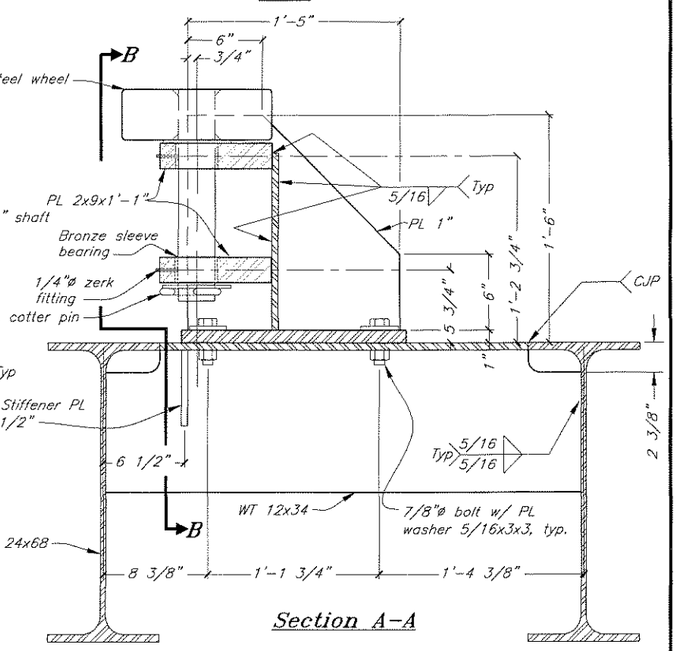

Section A-A

Alignment Roller Assembly

Materials:

Shaft – ASTM A572 Gr50 (Fy=50 ksi) turned and polished
Roller – HSS12.75x0.50 (Fy=42 ksi) ASTM A500 GrB Seamless
Sleeve bearing – Alloy 932 (SAE 660) Bronze 3" ID x 3.50" OD, running fit shaft to bearing, transition fit bearing to block

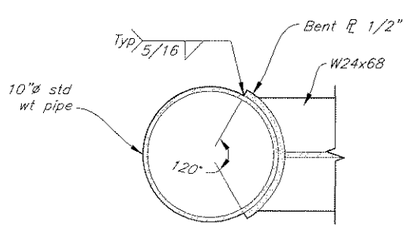

Section A 19

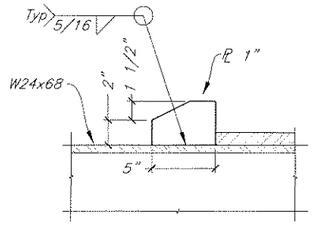

Section B 19

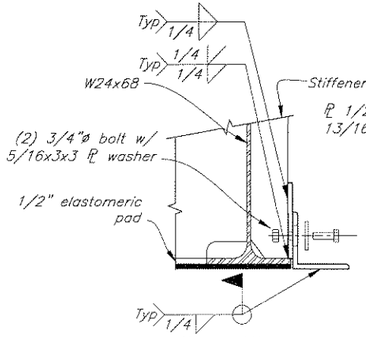

Side View

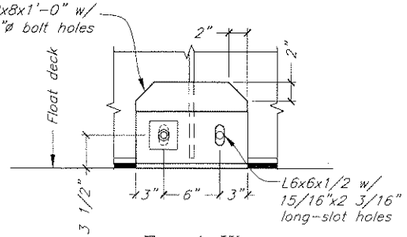

Front View

Detail 1 19

DO NOT SCALE FROM THESE DRAWINGS USE DIMENSIONS

DESIGNED BY: T. Doggett

STATE OF ALASKA
DEPARTMENT OF TRANSPORTATION
& PUBLIC FACILITIES
S.E. REGION DESIGN & ENGINEERING SERVICES DIVISION

Angoon Ferry Terminal
Improvements, Re-Bid

Seaward Bearing Details

STATE OF ALASKA 49th Timothy H. Doggett CE-9027 REGISTERED PROFESSIONAL ENGINEER 3-12-10

CHECKED BY: T. Arndt
DRAFTED BY: T. Doggett/C. Furman

PATH: Q:\Ang\68502\MF\Planset\19-20 Seaward Bearings.dwg
PLOT: PSPACE 1=1 Tab: Details Fri, 12/Mar/10 11:15AM

REVISIONS NO.	DATE	DESCRIPTION	PROJECT DESIGNATION	YEAR	SHEET NO.	TOTAL SHEETS
			68502	2010	20	72

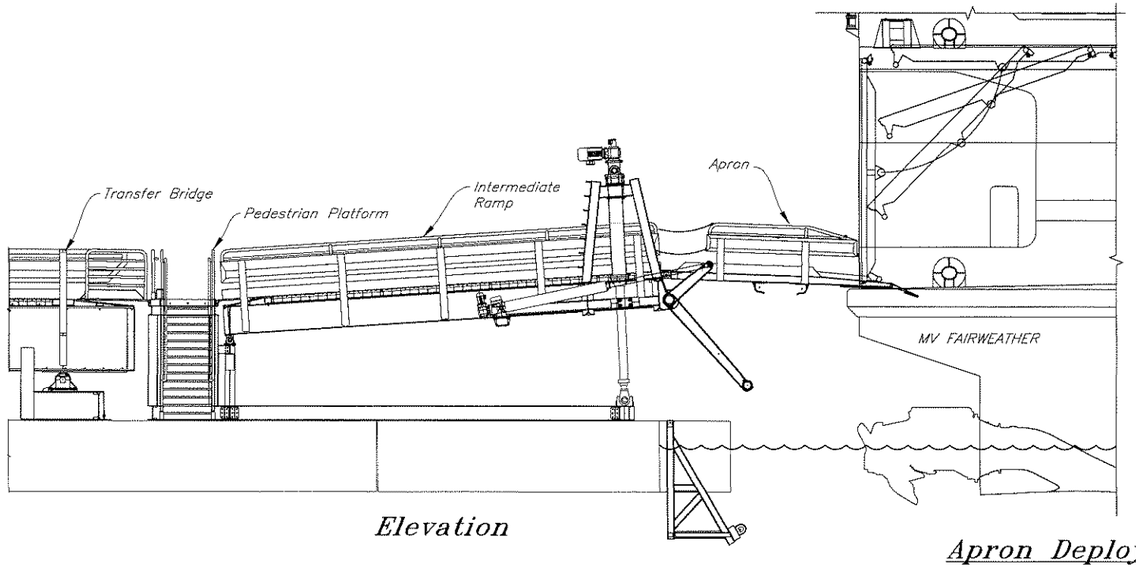

Elevation

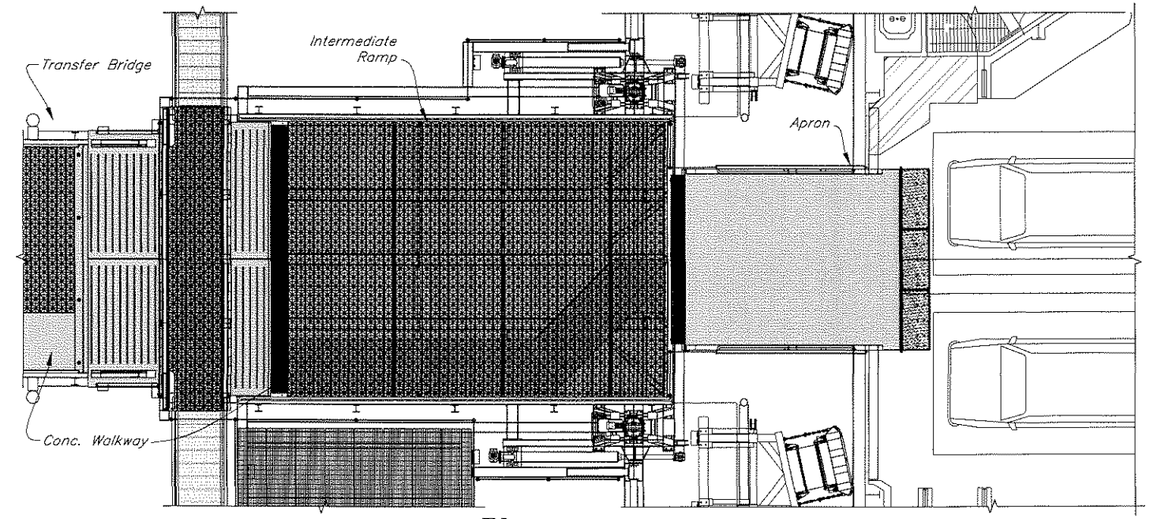

Plan

Apron Deployed (MV Fairweather)

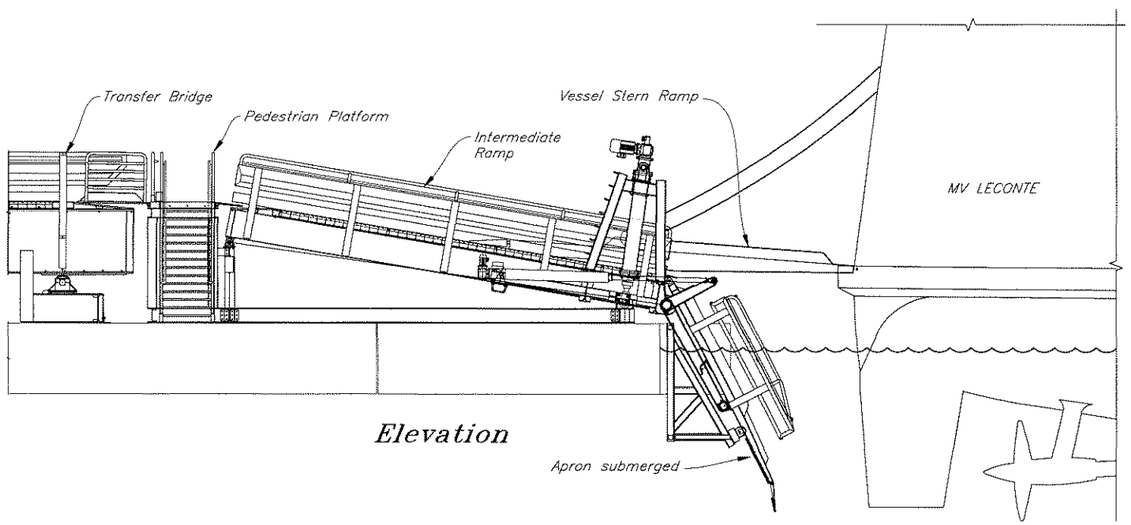

Elevation

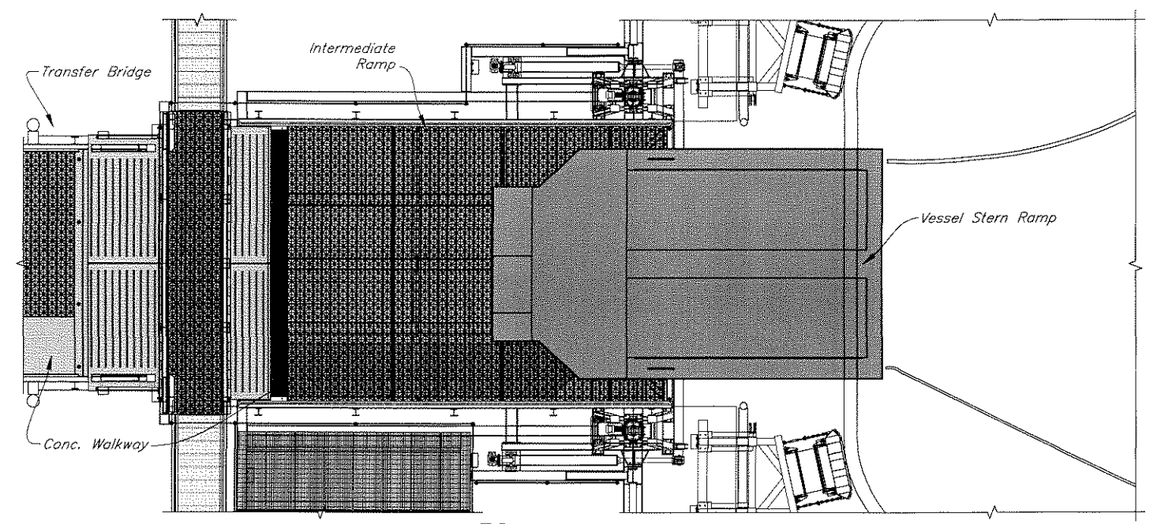

Plan

Apron Retracted (MV LeConte)

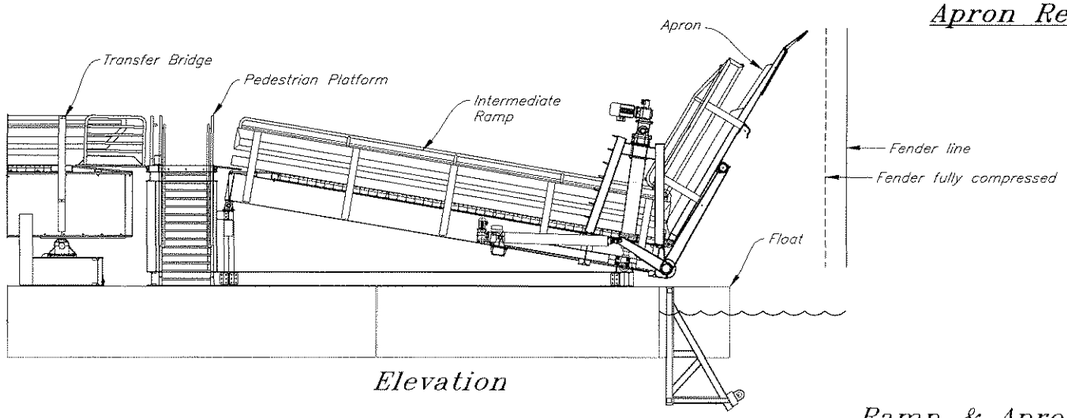

Elevation

Ramp & Apron – Stowed Position

DO NOT SCALE FROM THESE DRAWINGS USE DIMENSIONS

DESIGNED BY: T. Doggett

STATE OF ALASKA 49th Timothy H. Doggett CE-9827 REGISTERED PROFESSIONAL ENGINEER

3-10-12

CHECKED BY: K. Miller

DRAFTED BY: T. Doggett/C. Fuman

STATE OF ALASKA
DEPARTMENT OF TRANSPORTATION
& PUBLIC FACILITIES
S.E. REGION DESIGN & ENGINEERING SERVICES DIVISION

Angoon Ferry Terminal Improvements, Re-Bid

Ramp & Apron General Layout

PATH: O:\Ang\68502\MF\Planset\21 Ramp & Apron General Layout.dwg
PLOT: PSPACE 1=1 Tab: Plan-Elev Fri, 12/Mar/10 11:15AM

REVISIONS			PROJECT DESIGNATION	YEAR	SHEET NO.	TOTAL SHEETS
NO.	DATE	DESCRIPTION				
			68502	2010	21	72

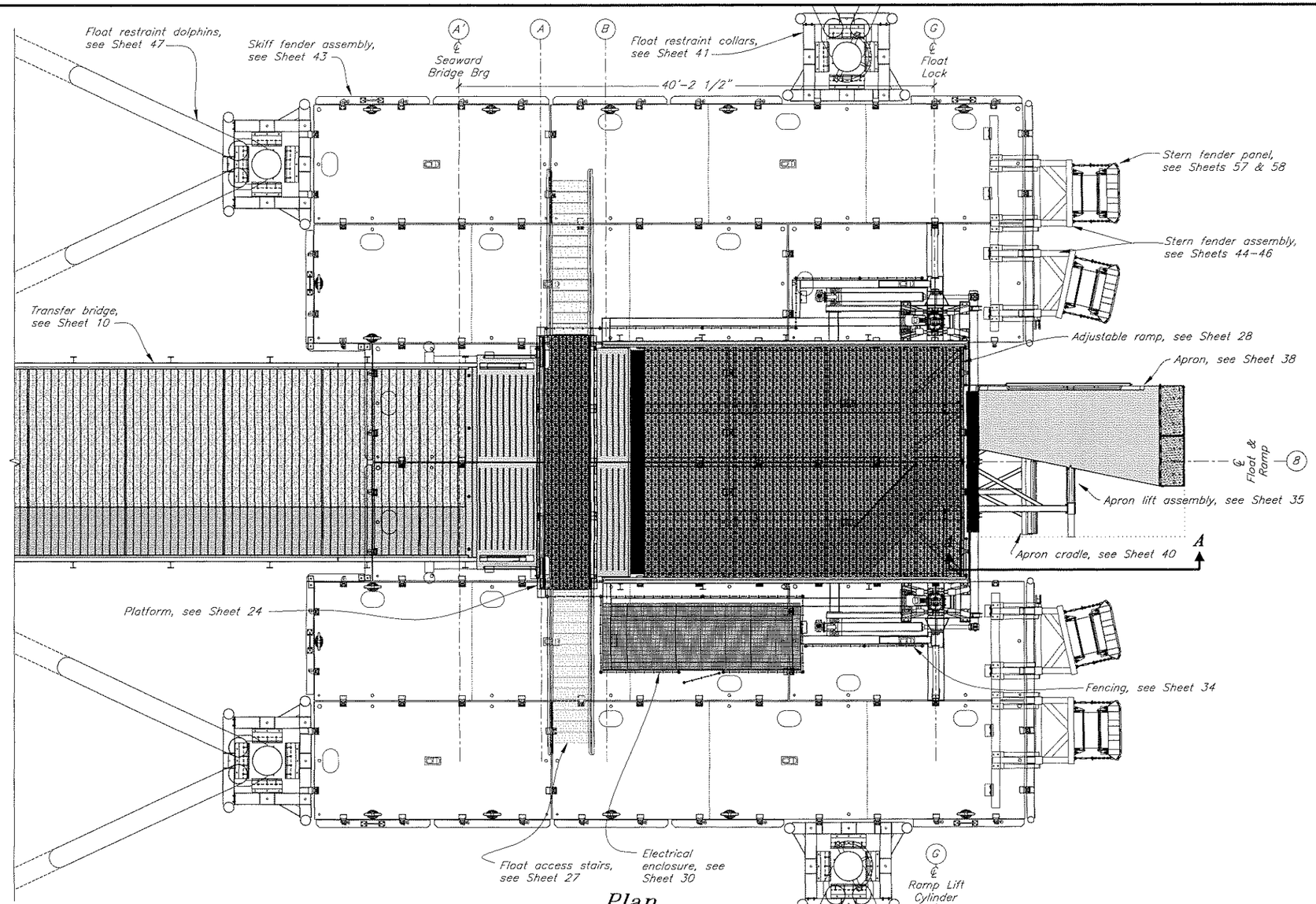

Plan

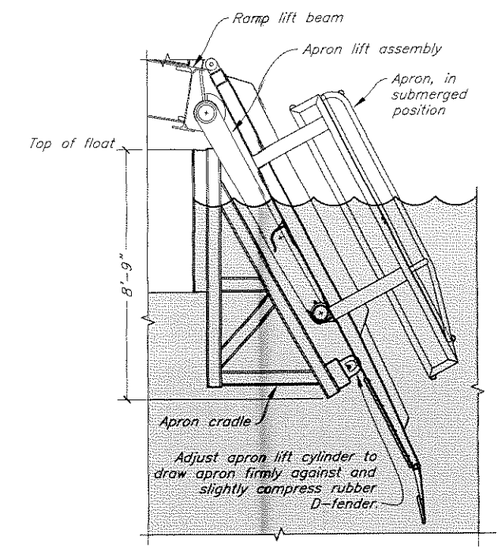

Section A-A

HORIZONTAL CONTROL OF BRIDGE, PLATFORM, AND RAMP:

1. Centerline of bridge, platform, and ramp (Grid 8) coincides with centerline of float assembly.
2. Centerline of ramp lift cylinder (Grid G) coincides with second lock from seaward face of float assembly.

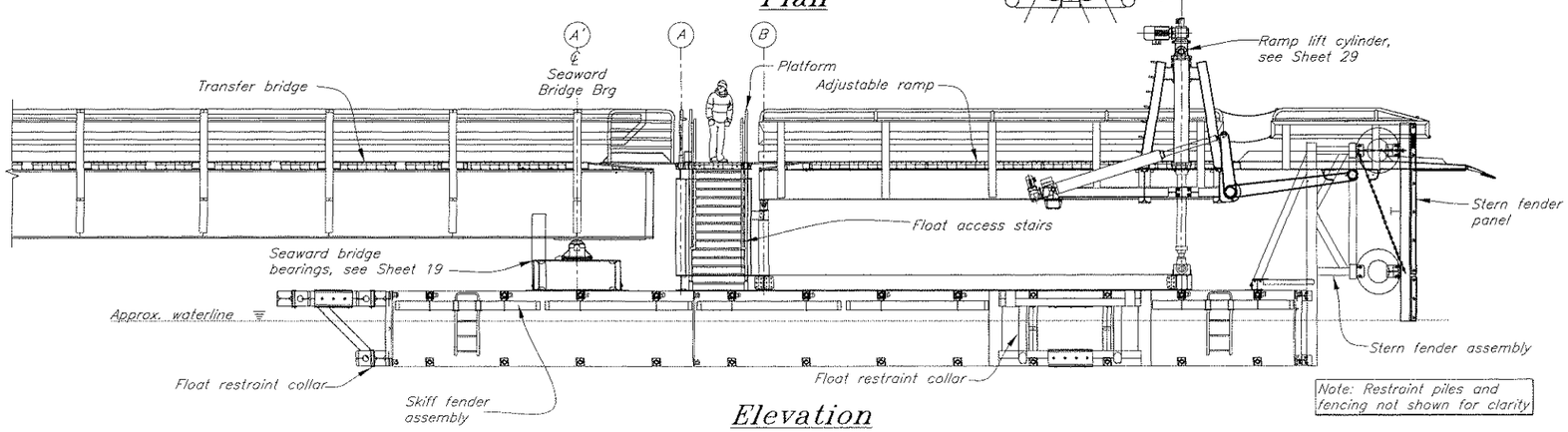

Elevation

Note: Restraint piles and fencing not shown for clarity

DO NOT SCALE FROM THESE DRAWINGS USE DIMENSIONS

DESIGNED BY: Staff

STATE OF ALASKA 49th Kirk D. Miller CE-8550 REGISTERED PROFESSIONAL ENGINEER 4/27/10

CHECKED BY: K. Miller

DRAFTED BY: M. Walters/C. Furman

STATE OF ALASKA
DEPARTMENT OF TRANSPORTATION
& PUBLIC FACILITIES
S.E. REGION DESIGN & ENGINEERING SERVICES DIVISION

Angoon Ferry Terminal Improvements, Re-Bid

Float and Platform Layout

PATH: Q:\Ang\68502\MF\Planset\22 Float & Platform Plan.dwg

PLOT: PSPACE 1=1 Tab: Plan-Elev

Mon, 19/Apr/10 02:54PM

REVISIONS			PROJECT DESIGNATION	YEAR	SHEET NO.	TOTAL SHEETS
NO.	DATE	DESCRIPTION	68502	2010	22	72

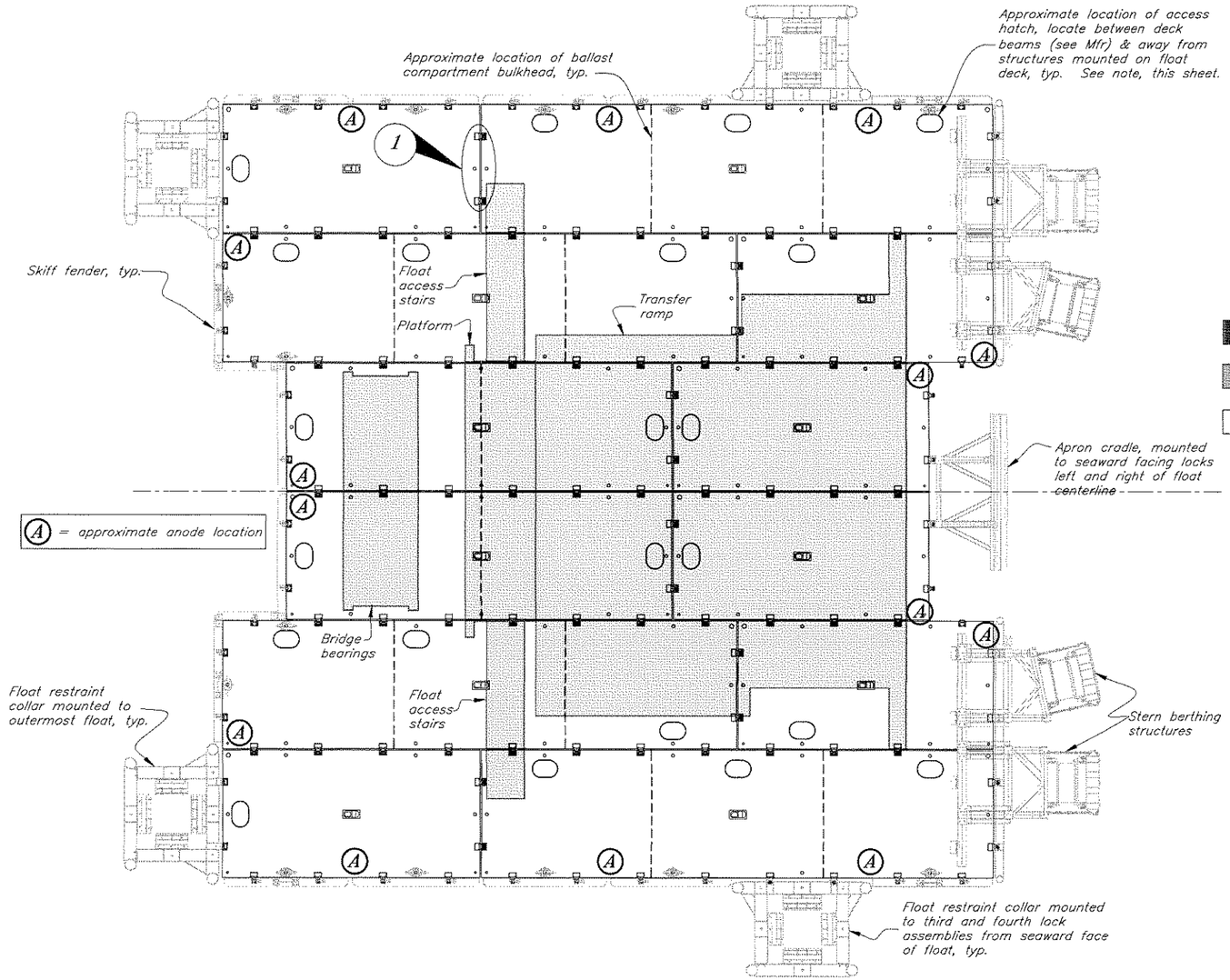

Float Layout

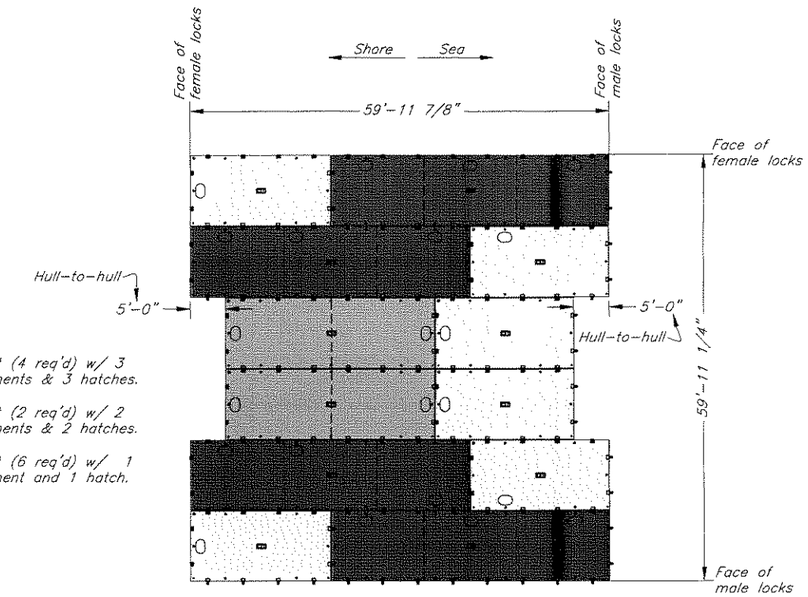

Float Schedule

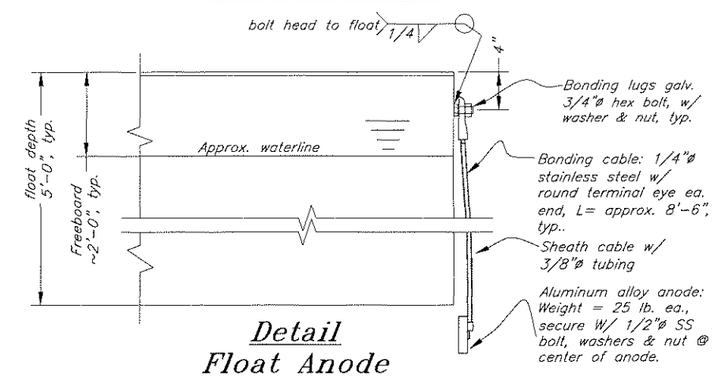

Detail
Float Anode

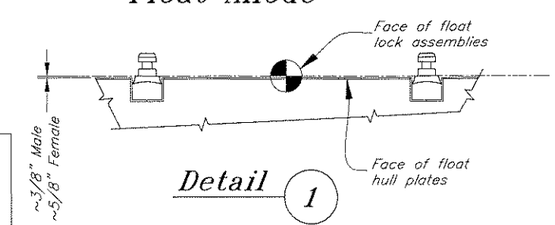

Detail 1

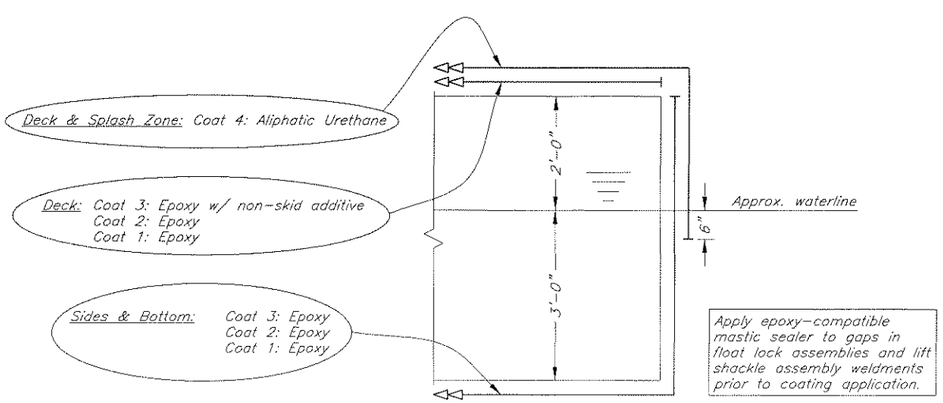

Support Float Coating Schematic

NOTES:

ACCESS HATCHES: New Access Hatches shall be Baier oval, flush, plain, type"C" commercial, aluminum w/ galv. steel rim or equal and installed per manufacturer's recommendations.

BALLAST: Float System shall be ballasted with potable water to ~2'-0" freeboard all around with all structures installed. Note that ballast may be required during erection/installation of components on the float system.

COATING SYSTEM: Coating system for exterior of float units shall be System 1 as noted on coating schematic detail and per Technical Specifications. Float attachments and assemblies shall be galvanized after fabrication. Interior of floats shall be uncoated.

FLOAT UNITS: Float Units are Flexifloat S-50 Series from:
Robishaw Engineering, Inc.
P.O.Box 79246
Houston, TX 77279
Ph: (713) 468-1706
Fax: (713) 468-5822
Email: info@flexifloat.com

DO NOT SCALE FROM THESE DRAWINGS USE DIMENSIONS

DESIGNED BY: D. Lowell
STATE OF ALASKA 49th Kirk D. Miller CE-8550 REGISTERED PROFESSIONAL ENGINEER
3/1/10
CHECKED BY: T. Daggett
DRAFTED BY: D. Lowell

STATE OF ALASKA
DEPARTMENT OF TRANSPORTATION
& PUBLIC FACILITIES
S.E. REGION DESIGN & ENGINEERING SERVICES DIVISION

Angoon Ferry Terminal Improvements, Re-Bid

Float Layout

PATH: Q:\Ang\68502\MF\Planset\23 Float Layout.dwg
PLOT: PSPACE 1=1 Tab: Bridge Support Float Layout Fri, 12/Mar/10 11:17AM

REVISIONS			PROJECT DESIGNATION	YEAR	SHEET NO.	TOTAL SHEETS
NO.	DATE	DESCRIPTION	68502	2010	23	72

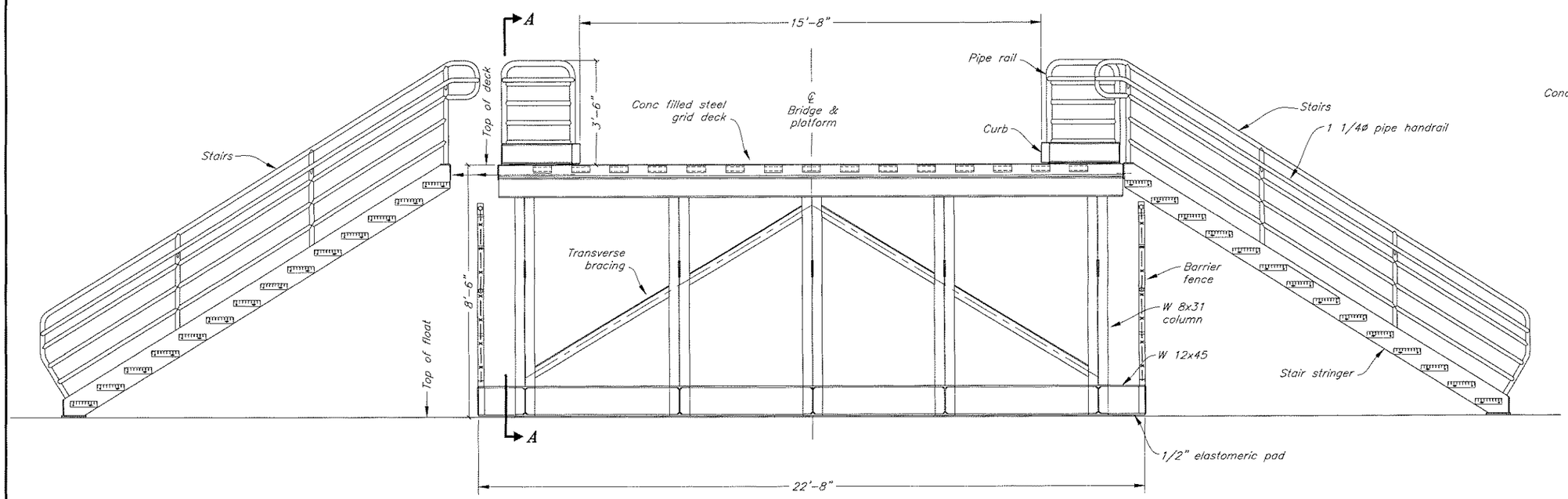

Elevation
Looking Shoreward

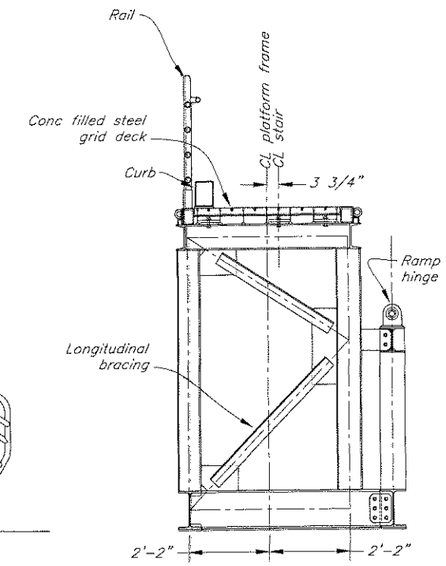

Section A-A

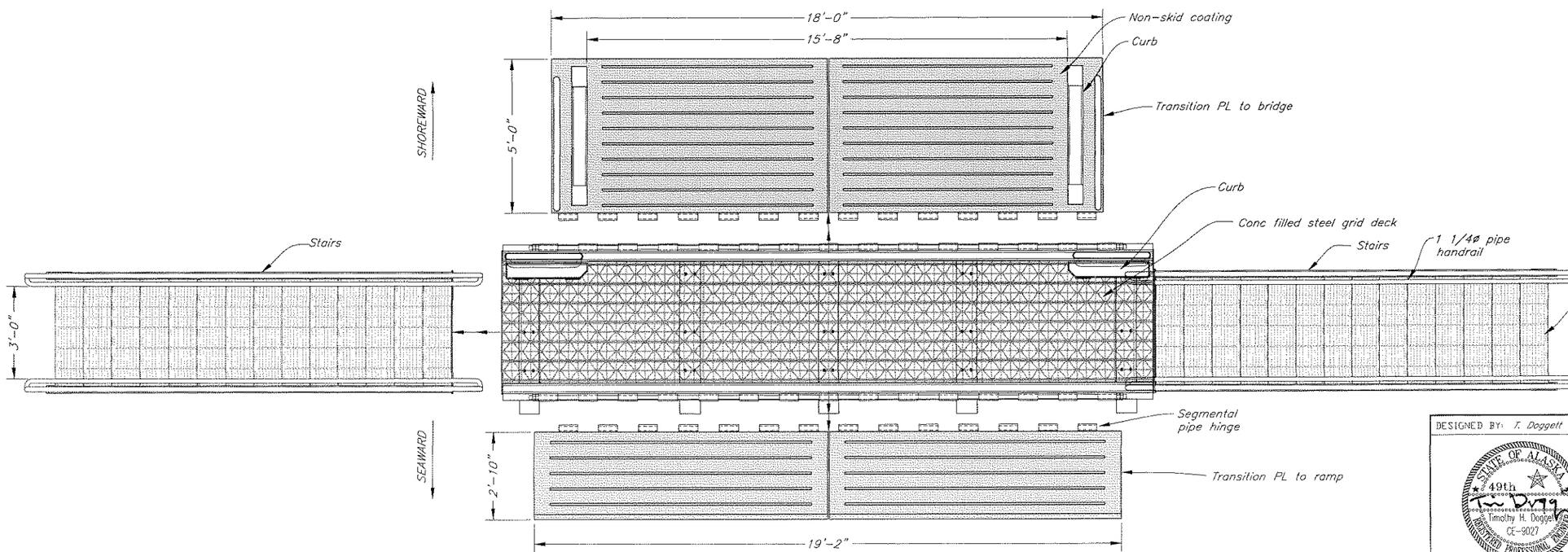

Plan

NOTES:

1) Non skid coating on transition plates in conformance with Section 513 – System 7A
2) Do not weld lower end of stair stringers to float deck.
3) Drill 3/8"ø weep hole at base of all posts.

DO NOT SCALE FROM THESE DRAWINGS USE DIMENSIONS

DESIGNED BY: T. Doggett

STATE OF ALASKA 49th Timothy H. Doggett CE-9027 REGISTERED PROFESSIONAL ENGINEER 3-12-10

CHECKED BY: K. Miller
DRAFTED BY: T. Doggett/C. Fumon

STATE OF ALASKA
DEPARTMENT OF TRANSPORTATION
& PUBLIC FACILITIES
S.E. REGION DESIGN & ENGINEERING SERVICES DIVISION

Angoon Ferry Terminal Improvements, Re-Bid

Platform Layout

PATH: G:\Ang\68502\MF\Plansel\24 Platform Layout.dwg
PLOT: PSPACE 1=1 Tab: Layout
Fri, 12/Mar/10 02:47PM

REVISIONS			PROJECT DESIGNATION	YEAR	SHEET NO.	TOTAL SHEETS
NO.	DATE	DESCRIPTION	68502	2010	24	72

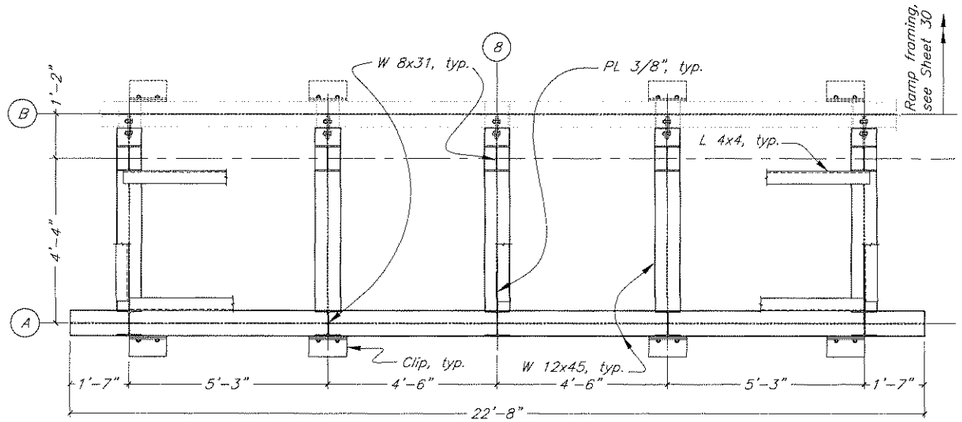

Bottom Framing Plan

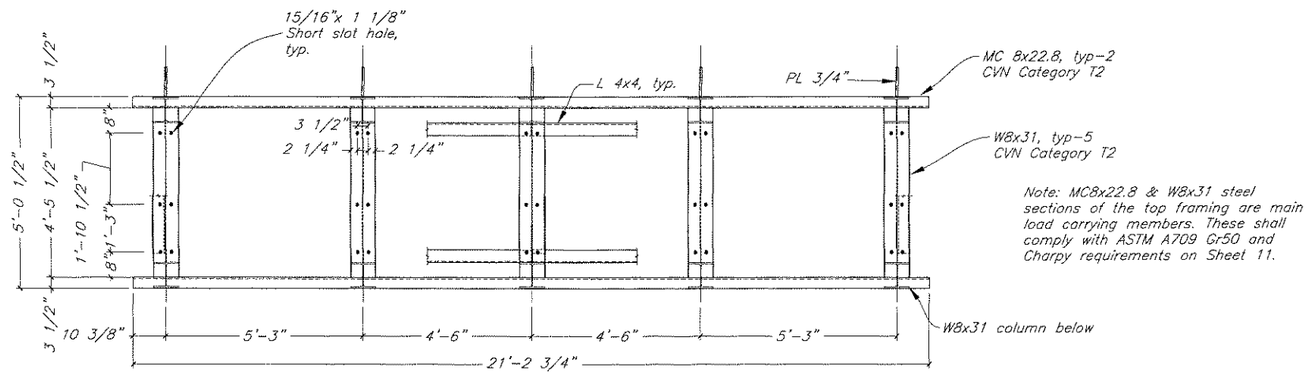

Top Framing Plan

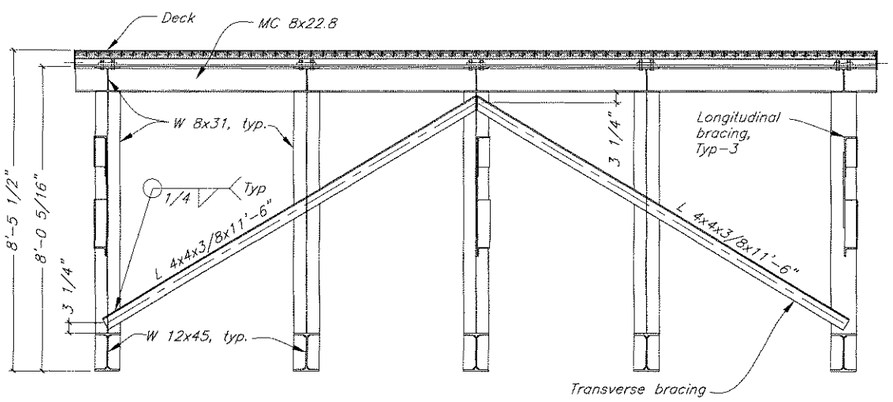

Section A-A

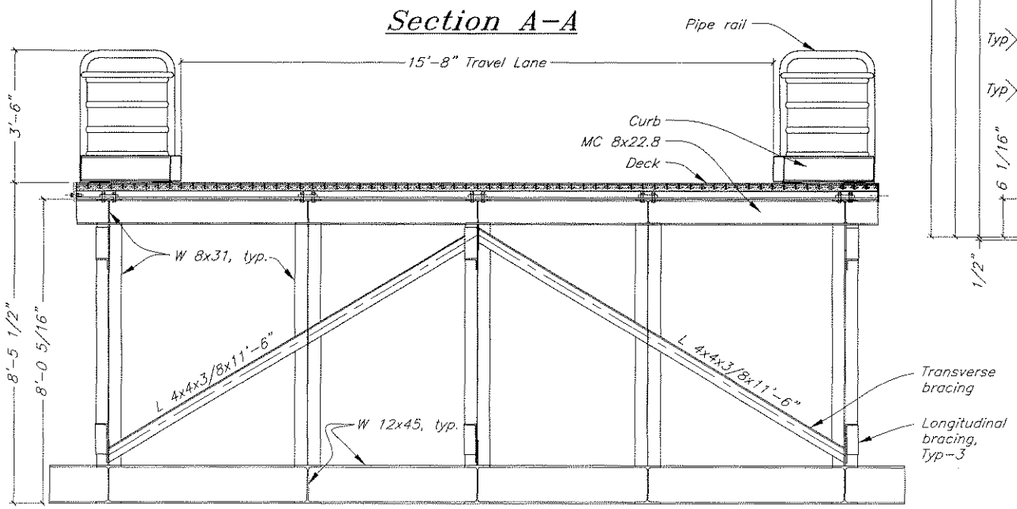

Section B-B

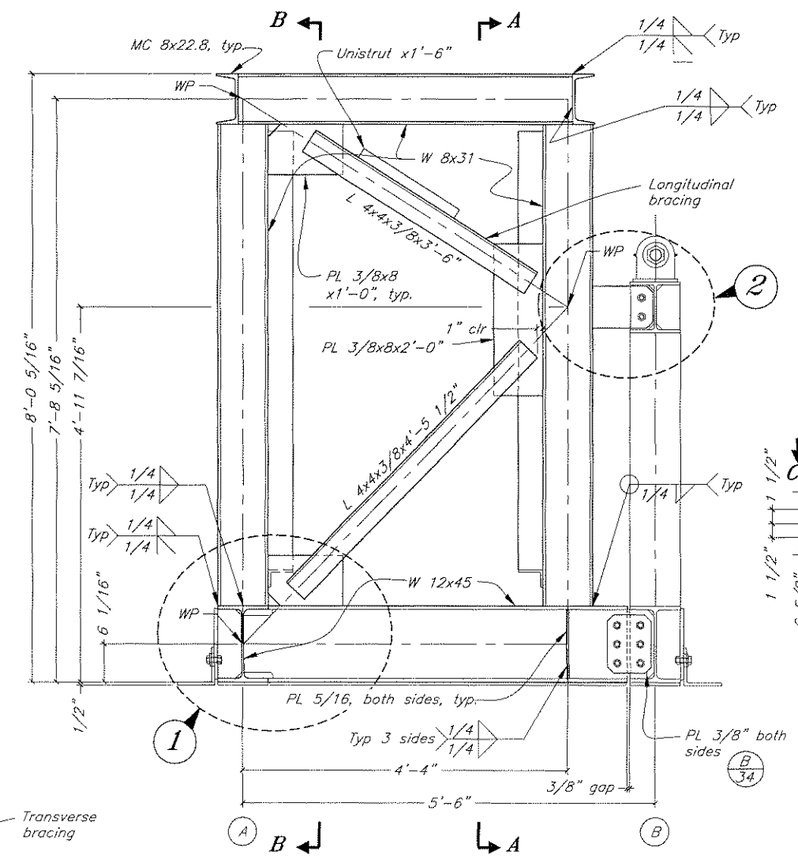

Framing Side Elevation

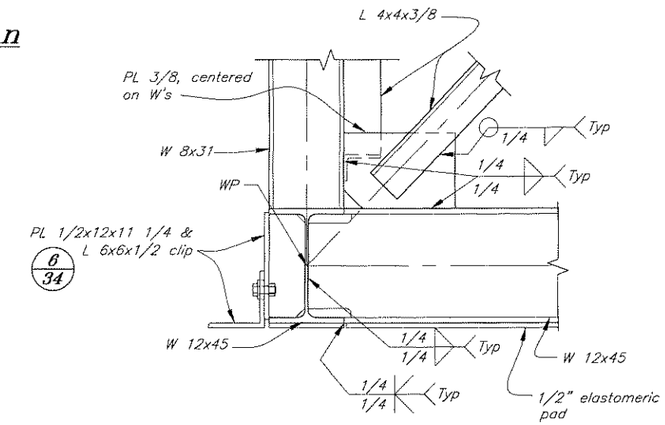

Detail 1

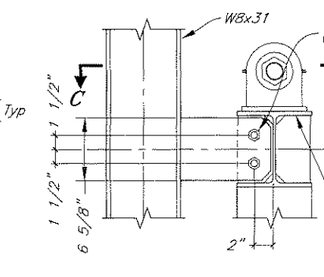

Detail 2

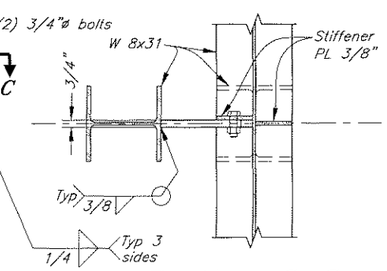

Section C-C

DO NOT SCALE FROM THESE DRAWINGS USE DIMENSIONS

DESIGNED BY: T. Doggett

STATE OF ALASKA 49th Timothy H. Doggett CE-9027 REGISTERED PROFESSIONAL ENGINEER 3-12-10

STATE OF ALASKA
DEPARTMENT OF TRANSPORTATION & PUBLIC FACILITIES
S.E. REGION DESIGN & ENGINEERING SERVICES DIVISION

Angoon Ferry Terminal Improvements, Re-Bid

Platform Framing

CHECKED BY: K. Miller
DRAFTED BY: T. Doggett/C. Furman

PATH: Q:\Ang\68502\MF\Planset\25-27 Platform.dwg
PLOT: PSPACE 1=1 Tab: Framing Fri, 12/Mar/10 11:19AM

REVISIONS			PROJECT DESIGNATION	YEAR	SHEET NO	TOTAL SHEETS
NO.	DATE	DESCRIPTION	68502	2010	25	72

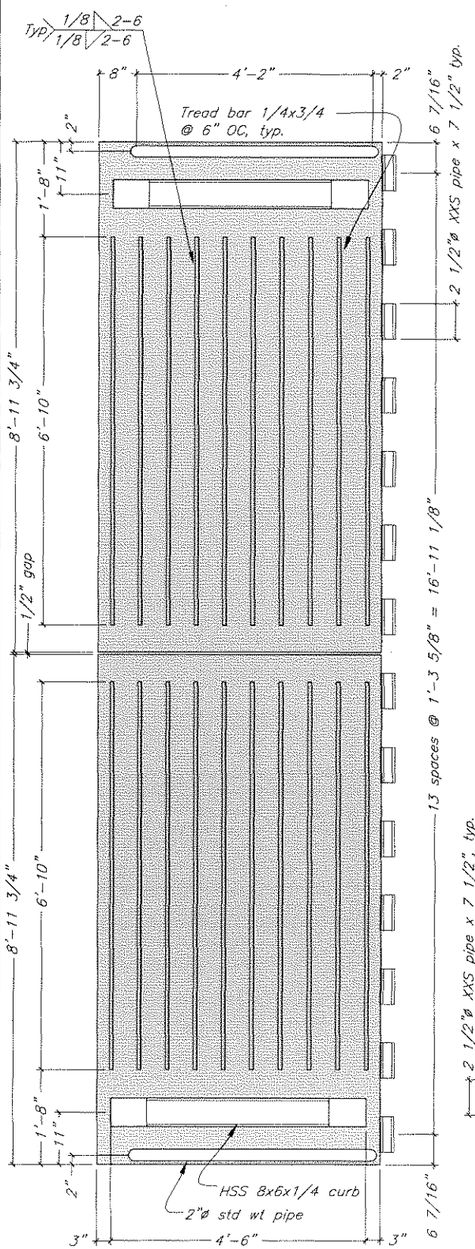

Transition PL

to Bridge

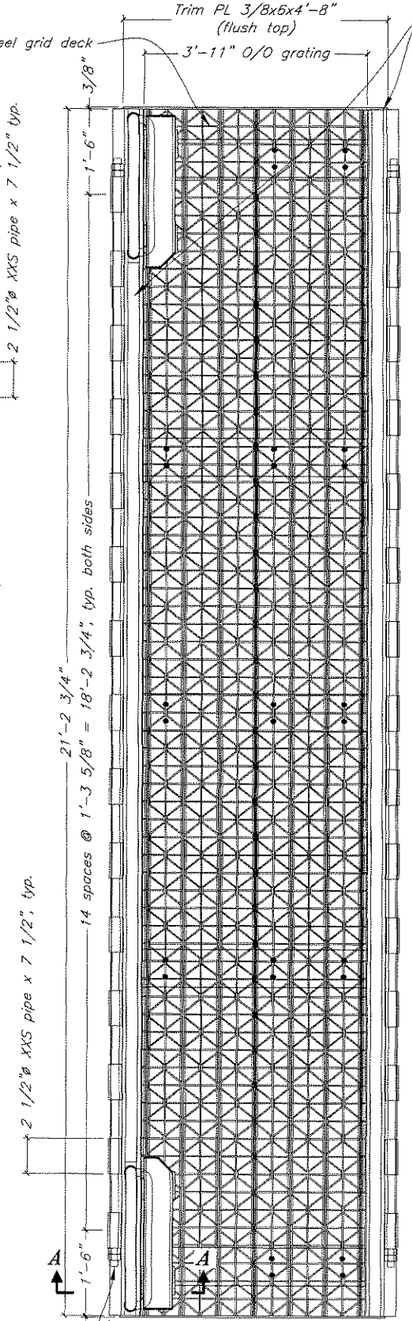

Platform Plan

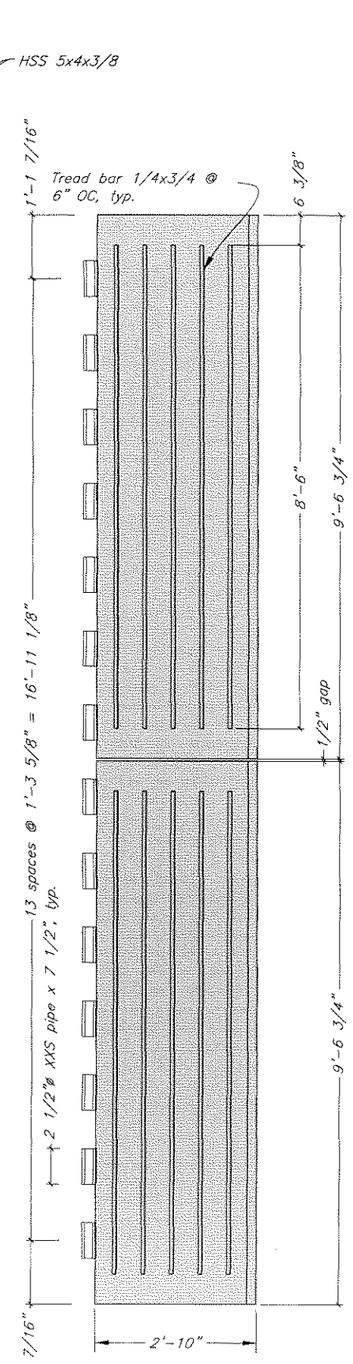

Transition PL

to Ramp

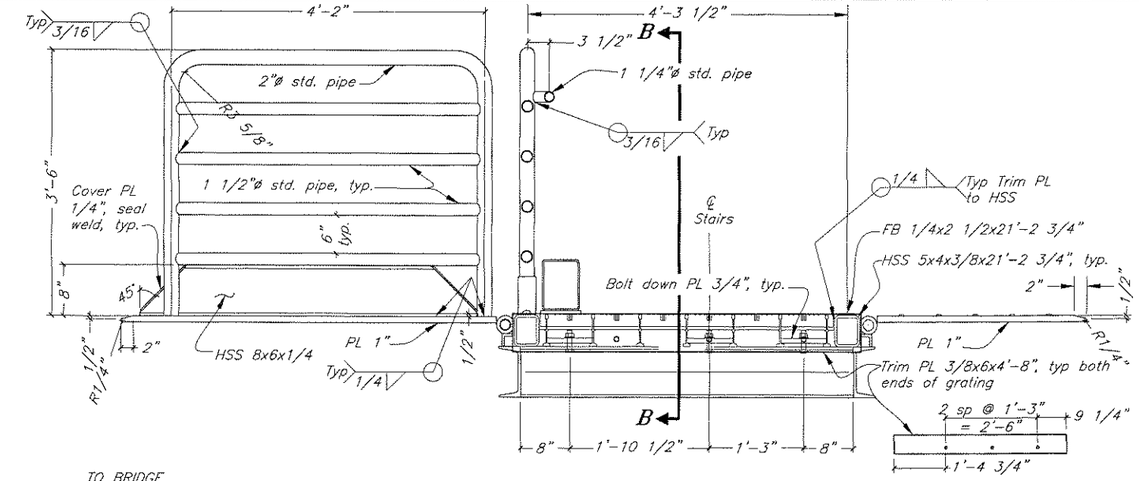

TO BRIDGE

Transition PL's & Platform Elevation

TO RAMP

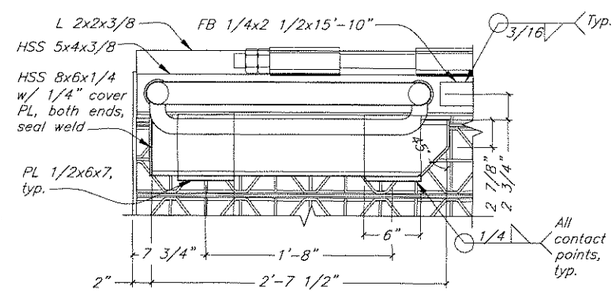

Plan

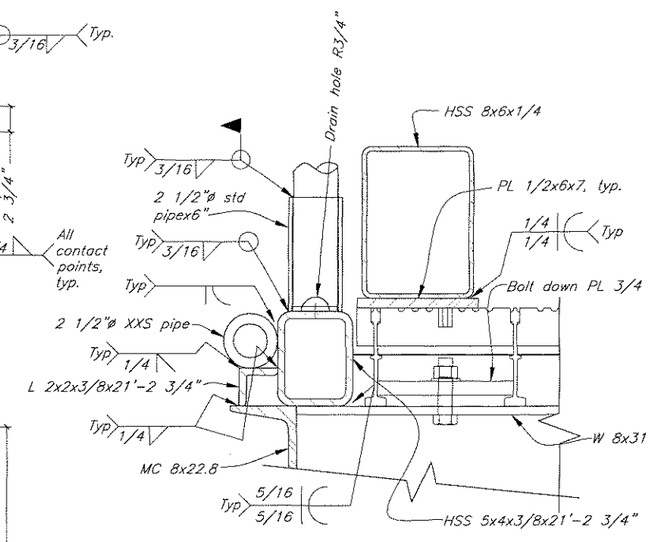

Section A-A

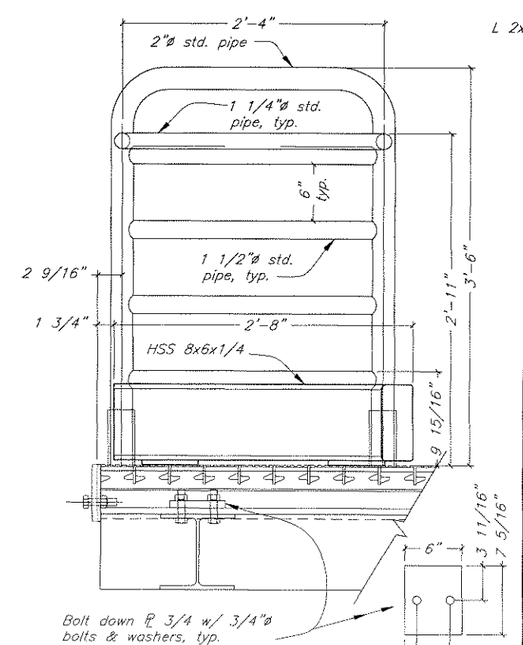

Section B-B

NOTE:
1. Bridge and ramp transition plates shall be coated with non-skid epoxy coating applied with serrated trowel, Section 513 – System 7A

DO NOT SCALE FROM THESE DRAWINGS USE DIMENSIONS

DESIGNED BY: T. Doggett

STATE OF ALASKA 49th Timothy H. Doggett CE-9027 PROFESSIONAL ENGINEER 3-12-10

CHECKED BY: K. Miller

DRAFTED BY: T. Doggett/C. Furman

STATE OF ALASKA
DEPARTMENT OF TRANSPORTATION
& PUBLIC FACILITIES
S.E. REGION DESIGN & ENGINEERING SERVICES DIVISION

Angoon Ferry Terminal Improvements, Re-Bid

Platform Decking & Transition Plates

PATH: O:\Ang\68502\MF\Planset\25-27 Platform.dwg
PLOT: PSPACE 1=1 Tab: Deck Fri, 12/Mar/10 11:19AM

REVISIONS			PROJECT DESIGNATION	YEAR	SHEET NO.	TOTAL SHEETS
NO.	DATE	DESCRIPTION	68502	2010	26	72

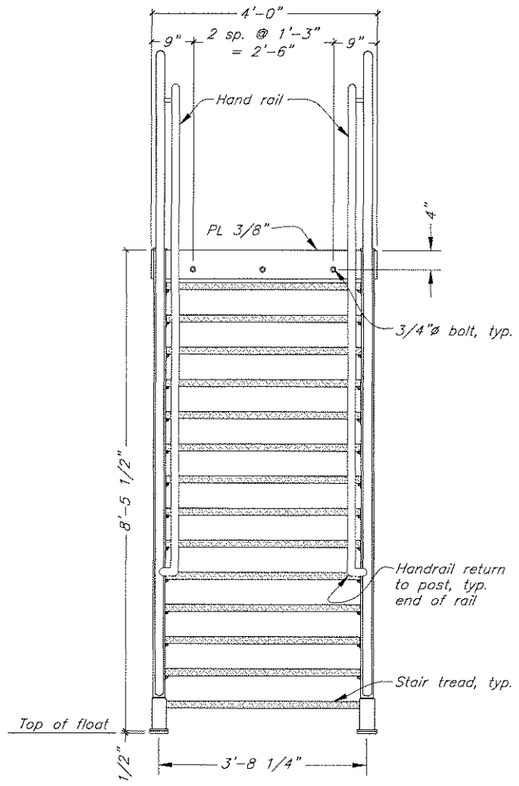

Front Elevation

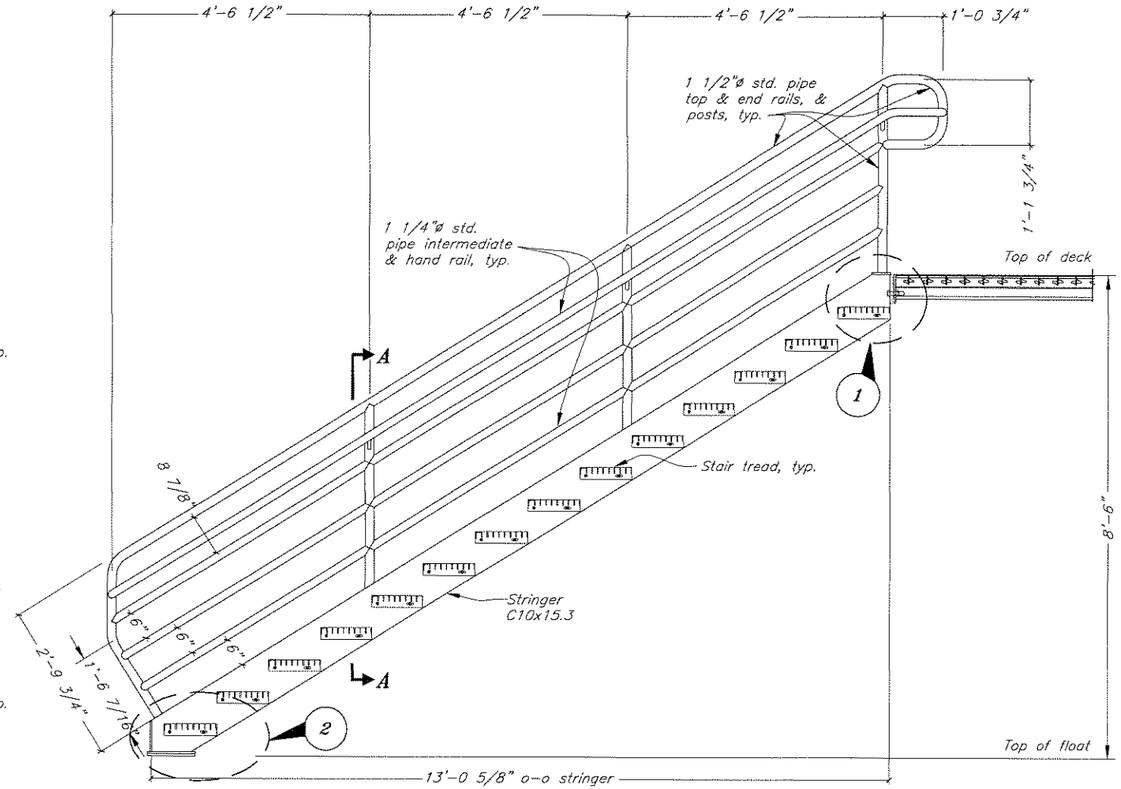

Typical Section

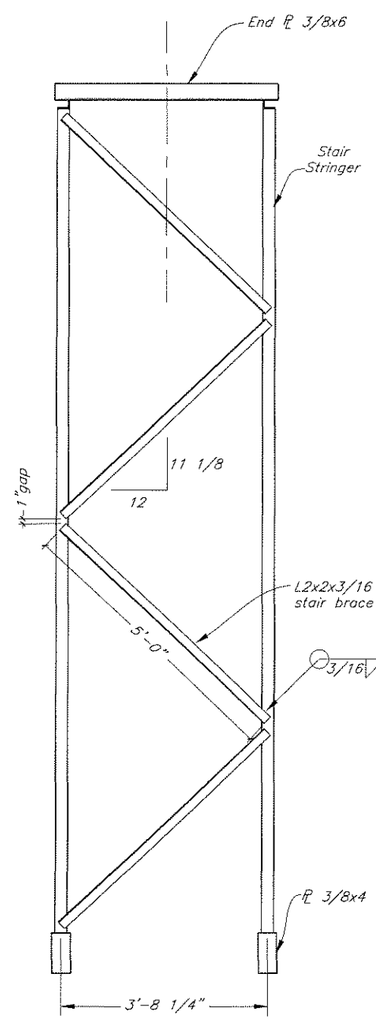

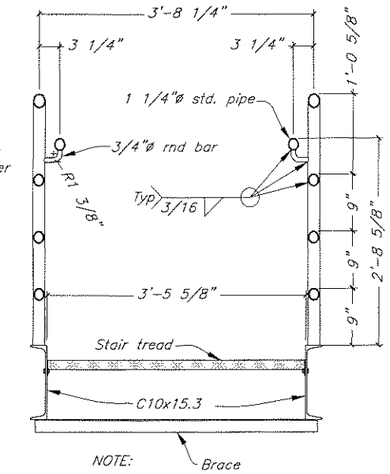

NOTE:
Place 3/8"ø weep hole at base of all pipe posts and rails.

Section A-A

Stair Stringer Detail

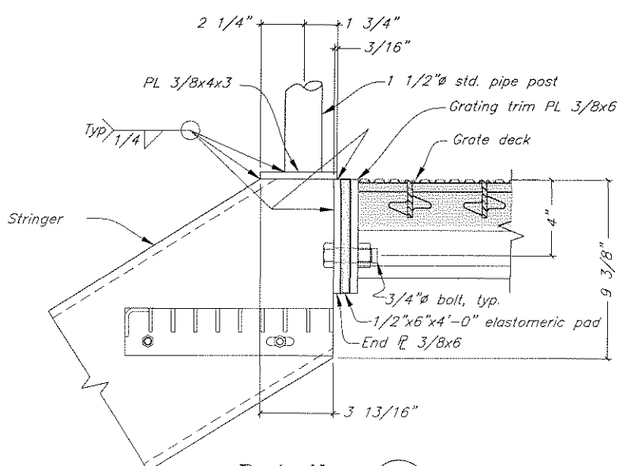

Detail 1

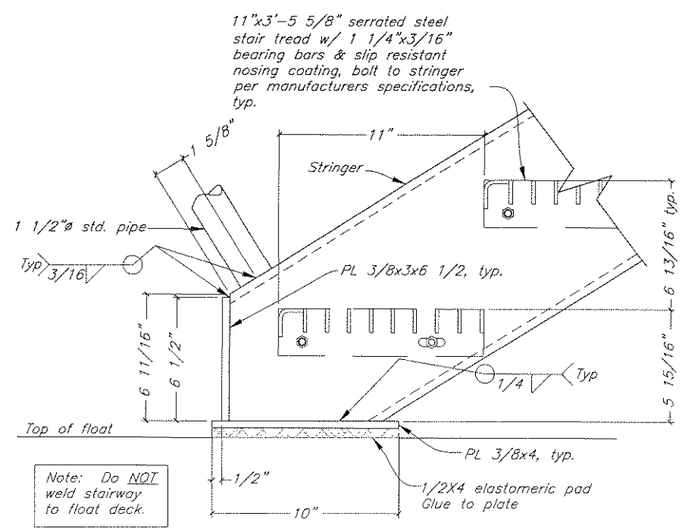

Note: Do NOT weld stairway to float deck.

Detail 2

DO NOT SCALE FROM THESE DRAWINGS USE DIMENSIONS

DESIGNED BY: T. Doggett

STATE OF ALASKA
DEPARTMENT OF TRANSPORTATION
& PUBLIC FACILITIES
S.E. REGION DESIGN & ENGINEERING SERVICES DIVISION

Angoon Ferry Terminal
Improvements, Re-Bid

Platform Stairs

STATE OF ALASKA 49th Timothy H. Doggett CE-9027 REGISTERED PROFESSIONAL ENGINEER
3-12-10

CHECKED BY: K. Miller
DRAFTED BY: T. Doggett/C. Fuman

PATH: O:\Ang\68502\MF\Planset\25-27 Platform.dwg
PLOT: PSPACE 1=1 Tab: Stairs Fri, 12/Mar/10 11:19AM

REVISIONS			PROJECT DESIGNATION	YEAR	SHEET NO.	TOTAL SHEETS
NO.	DATE	DESCRIPTION	68502	2010	27	72

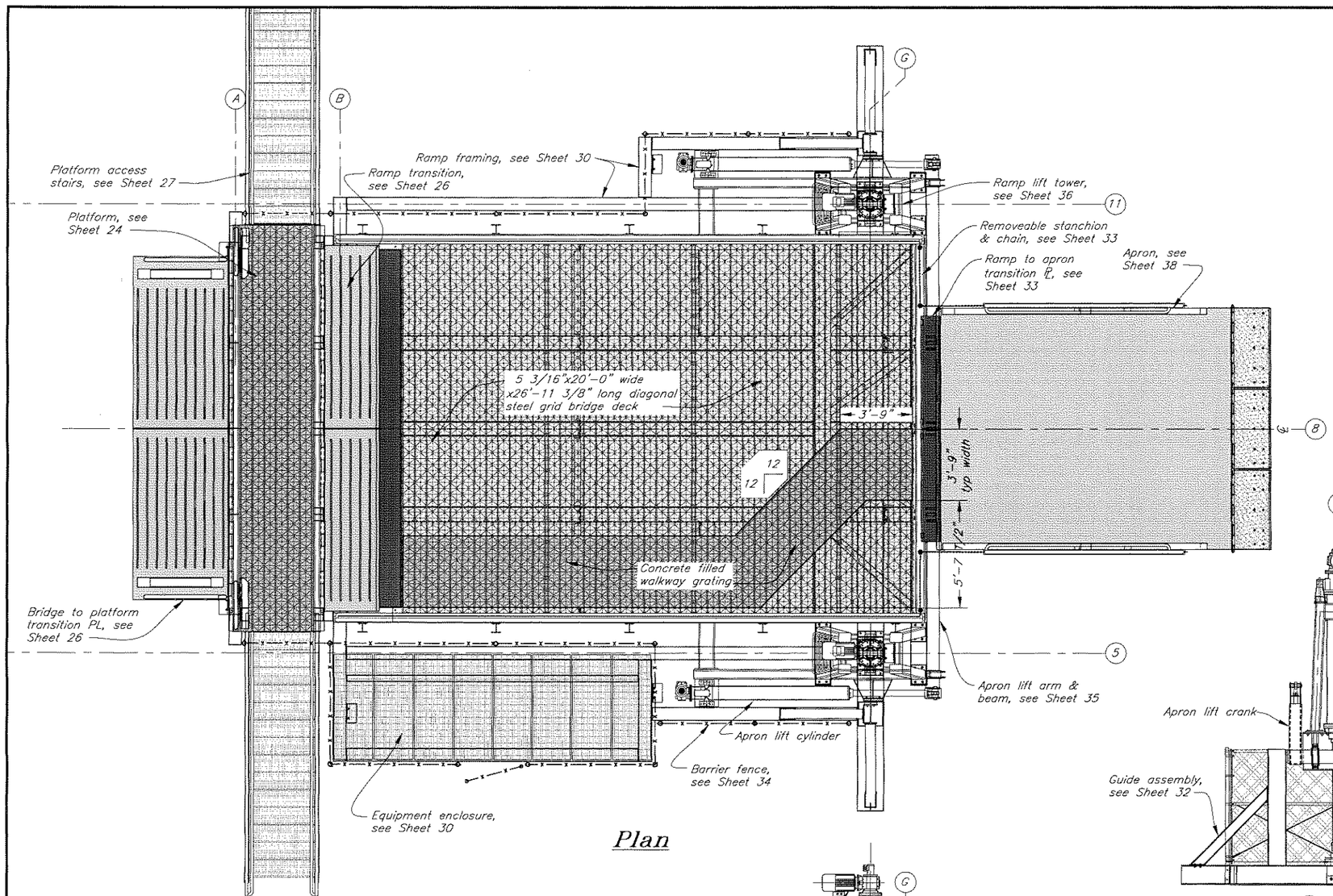

Plan

SHOP TESTING:

Ramp and apron components shall be substantially assembled and tested in the shop prior to installation in the field.

Testing shall verify the operation and full range of motion of the ramp and apron lift systems, and will require installation of the electric cylinders, electrical power, control and synchronization electronics, and local/remote control systems.

Deficiencies shall be corrected prior to being shipped to the field.

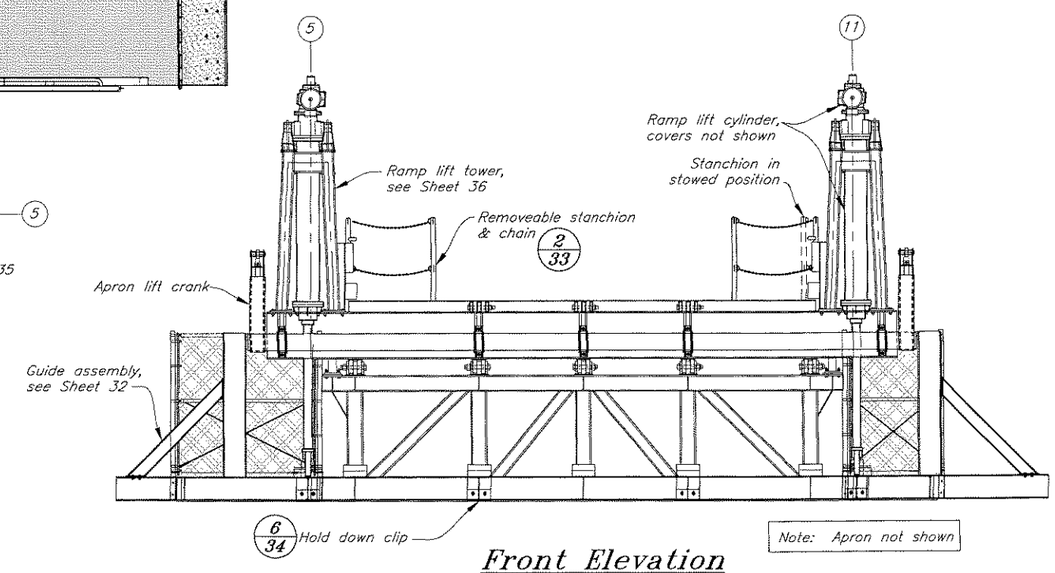

Front Elevation

Note: Apron not shown

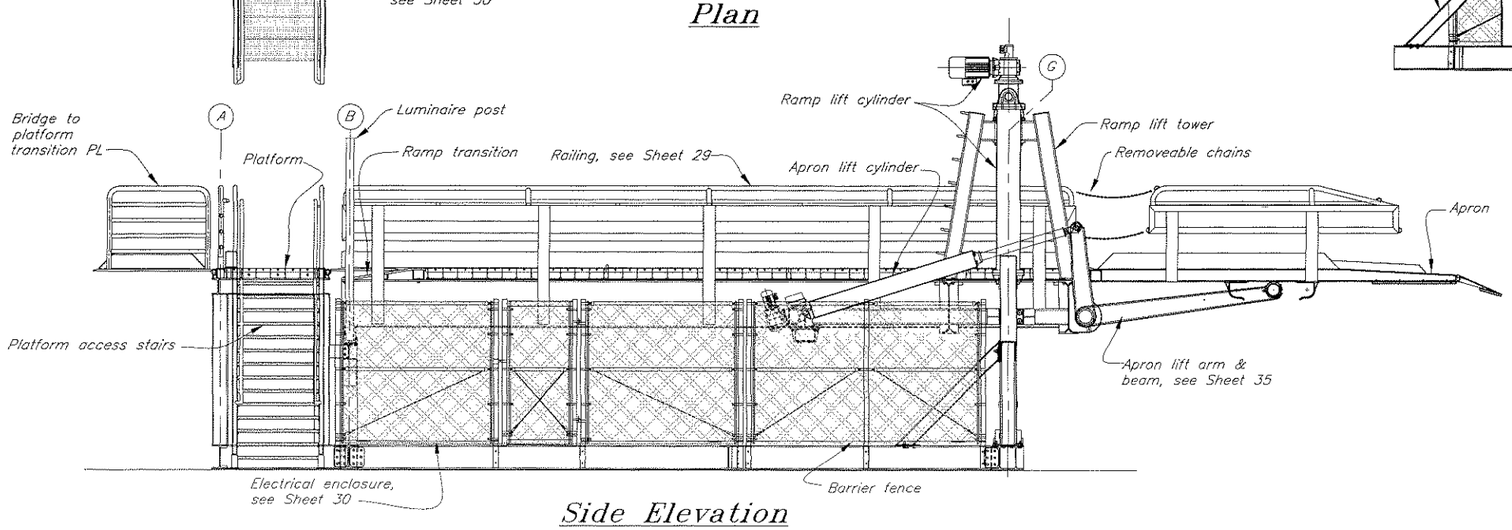

Side Elevation

DO NOT SCALE FROM THESE DRAWINGS USE DIMENSIONS

DESIGNED BY: T. Doggett

STATE OF ALASKA 49th Timothy H. Doggett CE-9027 REGISTERED PROFESSIONAL ENGINEER 3-12-10

CHECKED BY: K. Miller

DRAFTED BY: T. Doggett/C. Furman

STATE OF ALASKA
DEPARTMENT OF TRANSPORTATION
& PUBLIC FACILITIES
S.E. REGION DESIGN & ENGINEERING SERVICES DIVISION

Angoon Ferry Terminal Improvements, Re-Bid

Ramp Plan & Elevations

PATH: Q:\Ang\68502\MF\Planset\28 Ramp Plan & Elev.dwg

PLOT: PSPACE 1=1 Tab: Plan-Elev Fri, 12/Mar/10 02:49PM

REVISIONS			PROJECT DESIGNATION	YEAR	SHEET NO.	TOTAL SHEETS
NO.	DATE	DESCRIPTION	68502	2010	28	72

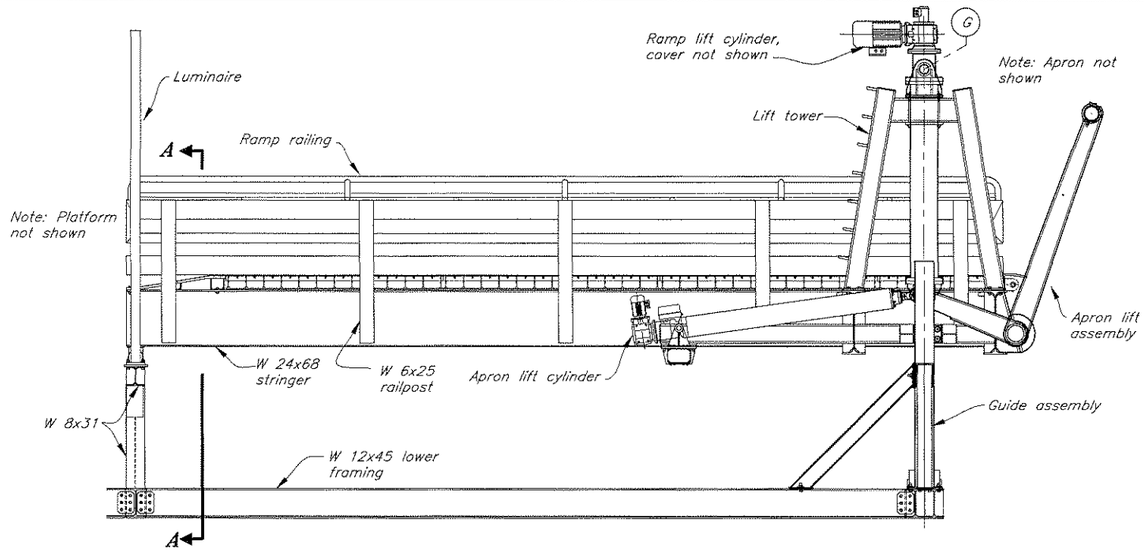

Elevation

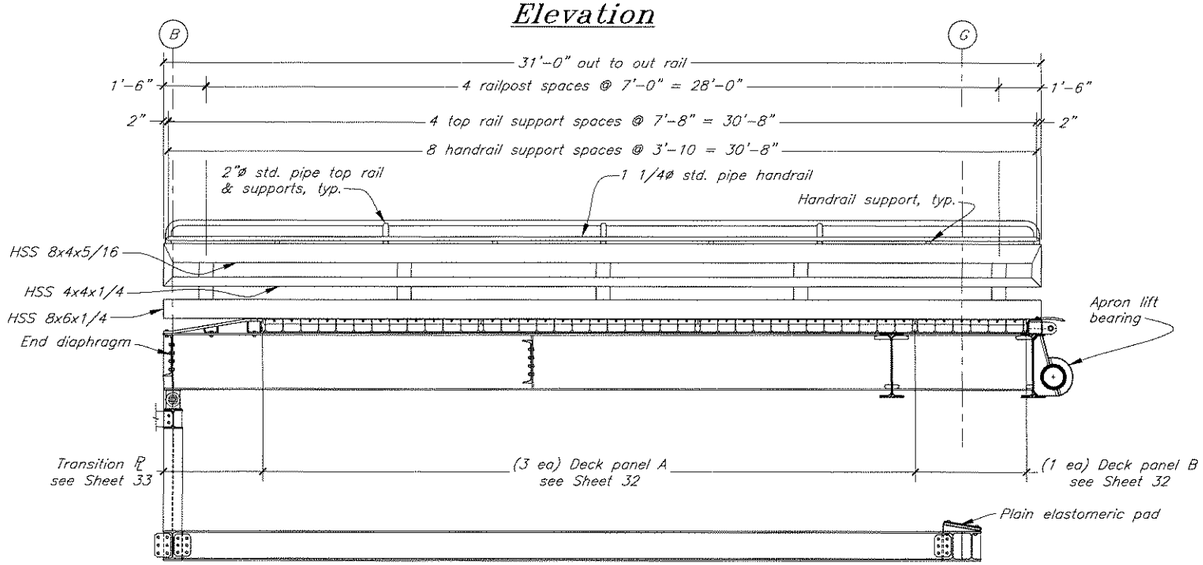

Typical Section

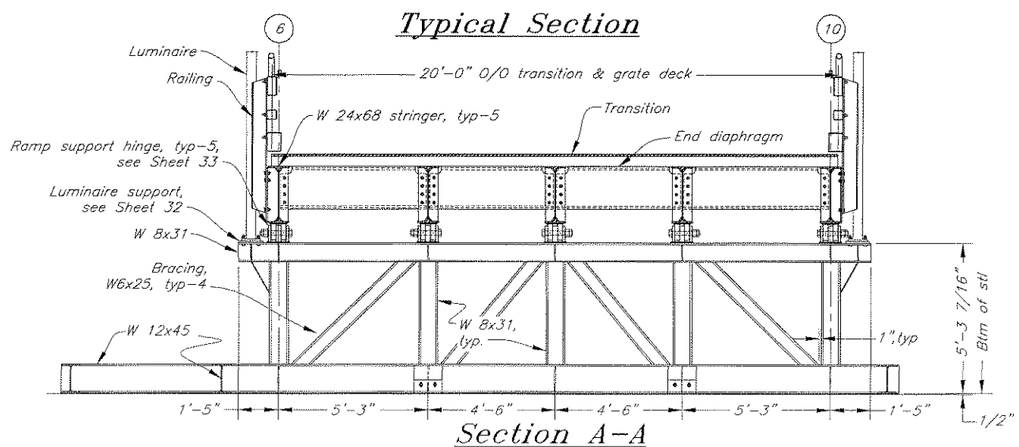

Section A-A

ELECTRIC LINEAR CYLINDER SPECIFICATIONS:

Ramp and apron lift systems are operated by electromechanical linear cylinders with the following capacities, speed, control systems, and dimensions. Cylinders shall be manufactured by RACO International, or an approved equal.

Provide certification and supporting calculations, sealed by a U.S. licensed civil engineer, that cylinders are designed to support the following loads in accordance with AASHTO LRFD Bridge Design Specifications, 2007 with interim updates.

Configuration of ramp and apron lift systems are based on RACO cylinders. Substitution from a different manufacturer may require redesign of ramp and apron framing. Redesign will be at no additional expense to the State.

Ramp Lift Cylinder:	RACO Unit 10	Apron Lift Cylinder:	RACO Unit 8
Thrust:	65,500 lbs. dynamic 90,000 lbs. static	Thrust:	18,000 lbs. dynamic
Stroke:	78.7 inches maximum	Stroke:	78.7 inches maximum
Rod speed:	0.7 in./sec (min)	Rod speed:	0.7 in./sec (min)
Lead:	ACME screw with catch nut	Lead:	ACME screw
Thrust tube:	Chrome plate	Thrust tube:	Stainless steel (316)
Gear:	Helical-worm	Gear:	Helical

Motor: 460 V / 3 phase / 60 HZ, 1800 base speed, IP65 enclosure, class F insul, inverter duty, right angle gear

Brake: Electromagnetic single disk brake with function monitoring microswitch, braking force applied when power is off

Electronics: Absolute position encoder, brake rectifier, vector drives with software, and associated electronics required for synchronization of cylinder pairs, as shown on Function Control Diagram, Sheet E8.

Misc: Thrust tube accordion type cover, sperical bearing rod end, and trunnion pins & bracket.

High corrosion protection package including: double front cap sealing with dirt/ice wiper, epoxy exterior coating, varnish base interior coating, sealing cable glands, anti-condensation heaters on motors and brakes.

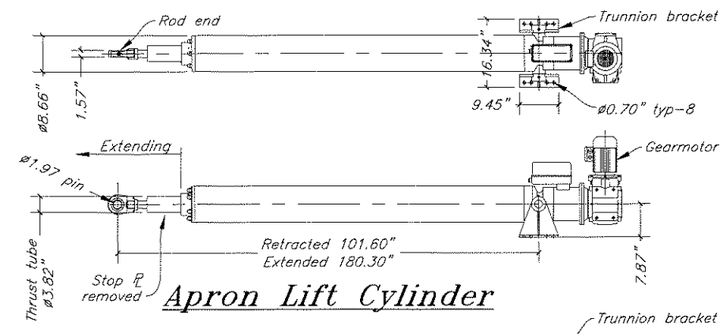

Apron Lift Cylinder

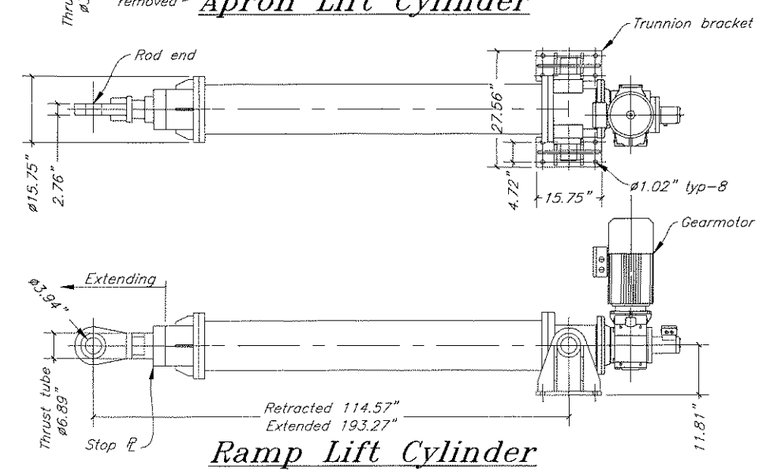

Ramp Lift Cylinder

RAMP LIFT CYLINDER DESIGN LOADS: (service loads per cylinder)

Load Combinations	D	S	L	(LxIM)xMPF	(LL)xMPF	DESIGN THRUST (kips)
Dynamic Loading:						
D	32.90					32.9
D + L	32.90		32.11			65.0
D + S	32.90	11.30				44.2
D + 0.75L + 0.75S	32.90	8.47	24.08			65.5
Static Loading:						
D	32.90					32.9
D + L	32.90			46.12	9.72	88.7
D + S	32.90	11.30				44.2
D + 0.75L + 0.75S	32.90	8.47		34.59	7.29	83.3

D = Dead Load (self-weight)
L = Truck HS20, wheel centered over Grid 9
LL = Lane Load 640 pif, 10 ft. wide lane
S = Snow 70 psf
IM = Dynamic Allowance 1.33
MPF = Multiple Presence Factor 1.08

DO NOT SCALE FROM THESE DRAWINGS USE DIMENSIONS

DESIGNED BY: T. Doggett

STATE OF ALASKA 49th Timothy H. Doggett CE-9027 REGISTERED PROFESSIONAL ENGINEER 3-12-10

CHECKED BY: K. Miller
DRAFTED BY: T. Doggett/C. Fumon

STATE OF ALASKA
DEPARTMENT OF TRANSPORTATION & PUBLIC FACILITIES
S.E. REGION DESIGN & ENGINEERING SERVICES DIVISION

Angoon Ferry Terminal Improvements, Re-Bid

Ramp Framing

PATH: O:\Ang\68502\MF\Planset\29-34 Ramp Framing.dwg
PLOT: PSPACE 1=1 Tab: Framing Elev Fri, 12/Mar/10 11:20AM

REVISIONS			PROJECT DESIGNATION	YEAR	SHEET NO.	TOTAL SHEETS
NO.	DATE	DESCRIPTION	68502	2010	29	72

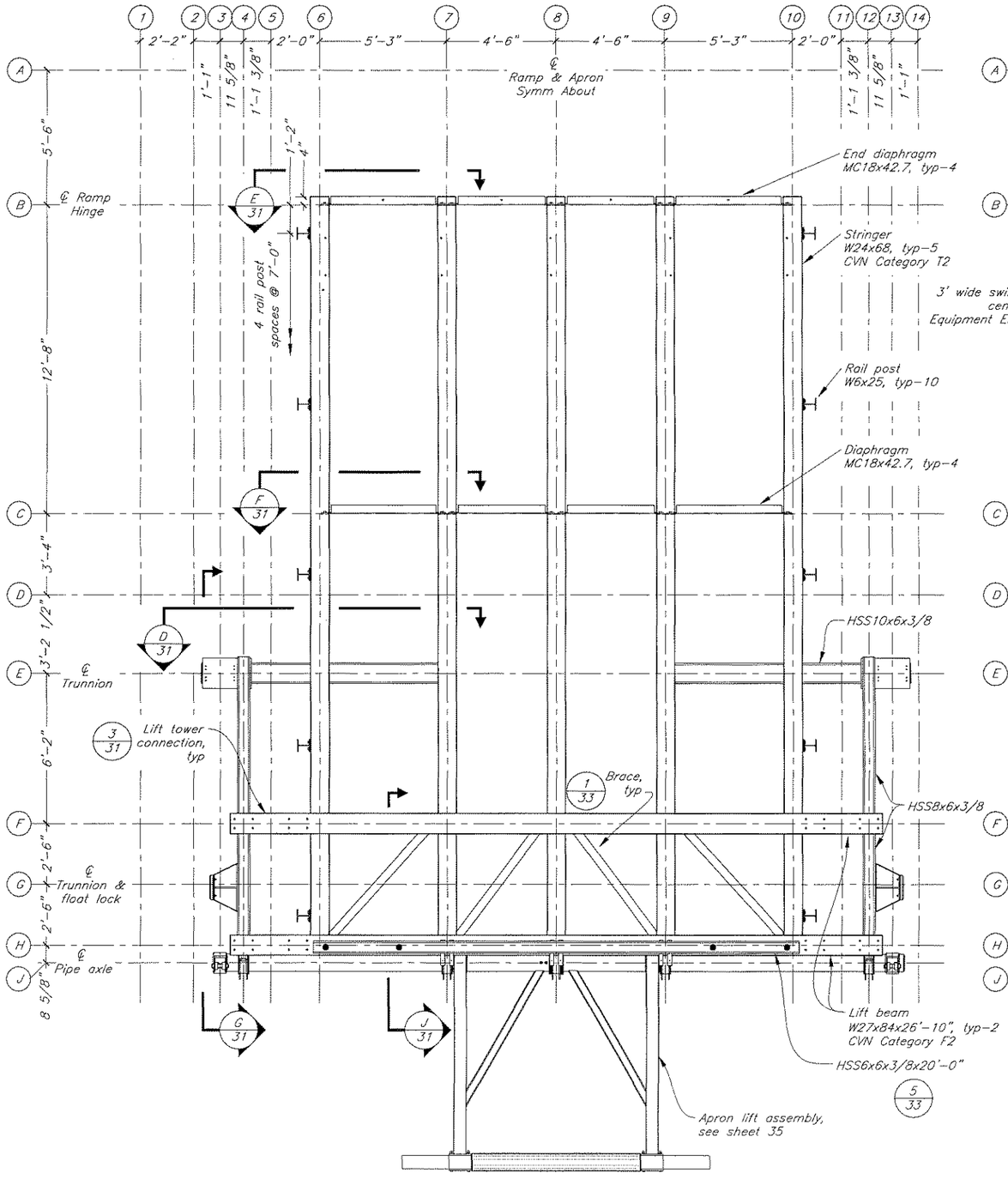

Upper Framing Plan

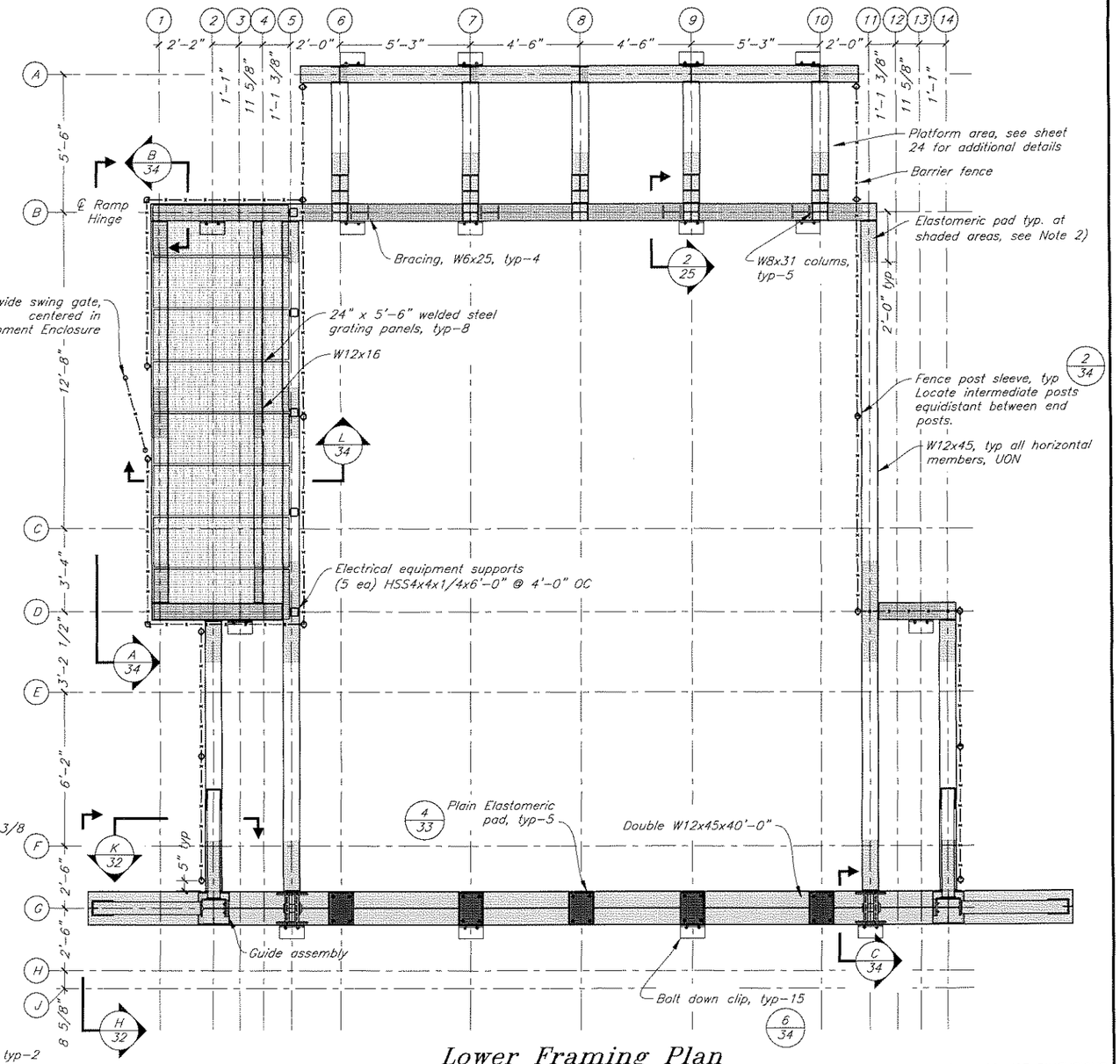

Lower Framing Plan

Note:

1) W24x68 stringers and W27x84 lift beams of the upper framing are main load carrying members. These shall comply with ASTM A709 Gr50 and Charpy requirements on Sheet 11.

2) 1/2" thick 50 Durometer plain elastomeric pad at shaded areas of lower framing, full width of bottom flange. Secure pad to underside of flange with LORD Engineered Adhesives 310 A/B two-part epoxy & 7701 treatment, or approved equal.

3) Install 2" diameter drain holes at 5' max spacing in webs of lower framing, just above lower flange fillet, along Grid Lines 1, 2, 4, 5, 11, & 14.

DO NOT SCALE FROM THESE DRAWINGS USE DIMENSIONS

DESIGNED BY: T. Doggett

STATE OF ALASKA 49th Timothy H. Doggett CE-9027 REGISTERED PROFESSIONAL ENGINEER 3-12-10

CHECKED BY: K. Miller

DRAFTED BY: T. Doggett/C. Furman

STATE OF ALASKA
DEPARTMENT OF TRANSPORTATION
& PUBLIC FACILITIES
S.E. REGION DESIGN & ENGINEERING SERVICES DIVISION

Angoon Ferry Terminal Improvements, Re-Bid

Ramp Framing Plan

PATH: O:\Ang\68502\MF\Plonset\29-34 Ramp Framing.dwg

PLOT: PSPACE 1=1 Tab: Framing Plan Fri, 12/Mar/10 02:53PM

REVISIONS			PROJECT DESIGNATION	YEAR	SHEET NO.	TOTAL SHEETS
NO.	DATE	DESCRIPTION	68502	2010	30	72

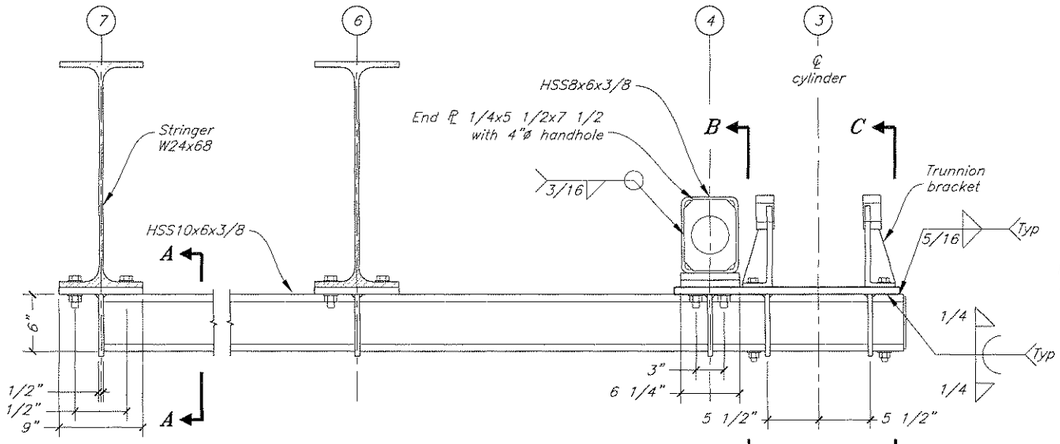

Section D/30

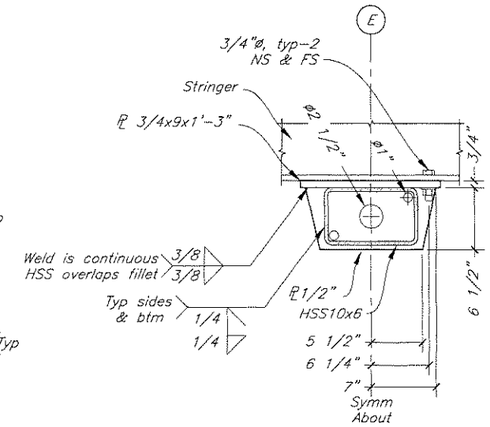

Section A-A

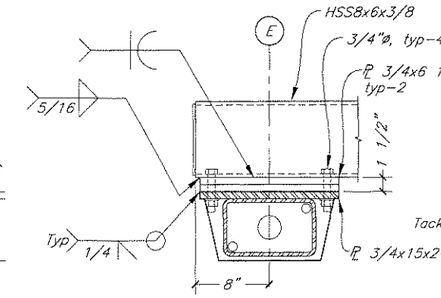

Section B-B

Details not shown, similar to Section A-A

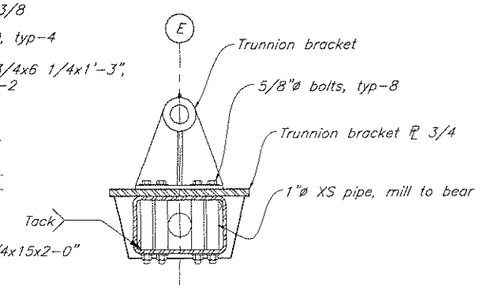

Section C-C

Details not shown, similar to Section A-A

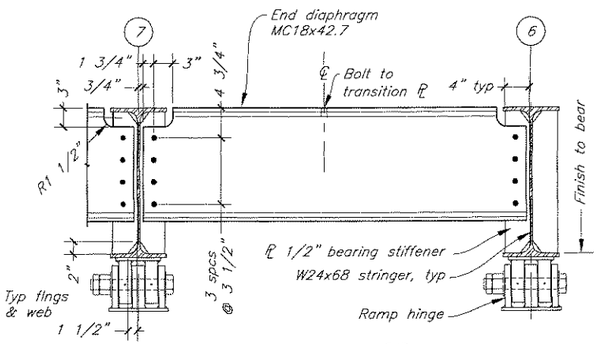

Elevation E/30

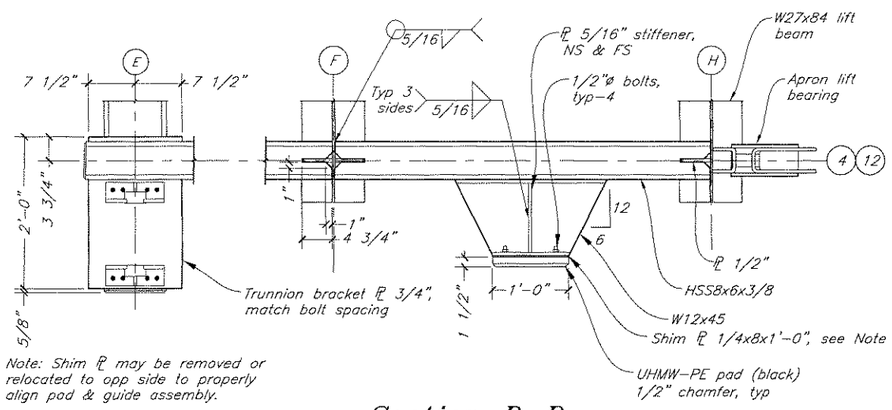

Note: Shim PL may be removed or relocated to opp side to properly align pad & guide assembly.

Section D-D

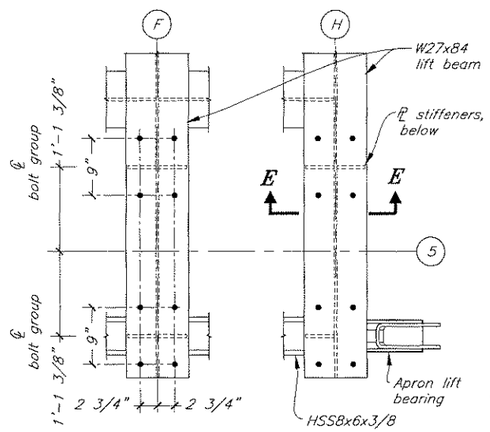

Detail 3/30

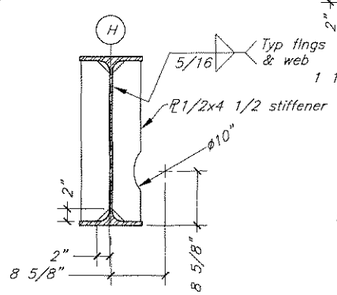

Section E-E

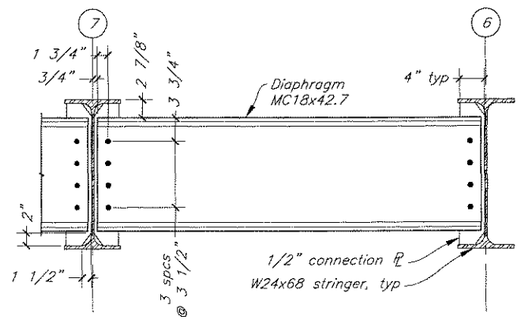

Section F/30

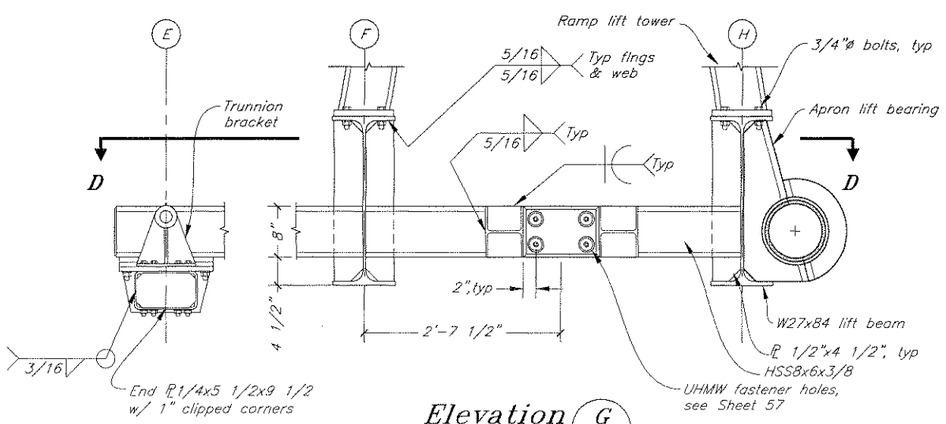

Elevation G/30

Note:

All bolts are 3/4" diameter ASTM A325, UON

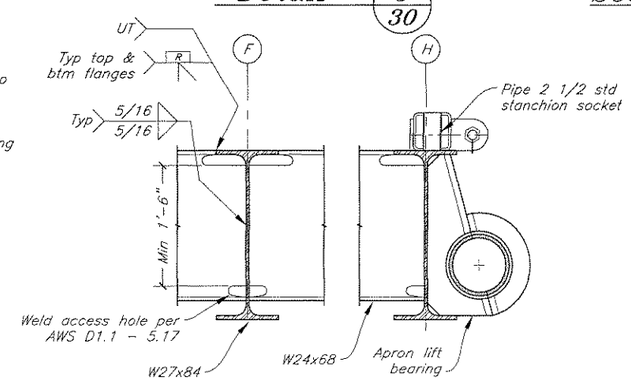

Section J/30

DO NOT SCALE FROM THESE DRAWINGS USE DIMENSIONS

DESIGNED BY: T. Doggett

STATE OF ALASKA 49th Timothy H. Doggett CE-9027 REGISTERED PROFESSIONAL ENGINEER 3.12.10

CHECKED BY: K. Miller

DRAFTED BY: T. Doggett/C. Fumon

STATE OF ALASKA
DEPARTMENT OF TRANSPORTATION
& PUBLIC FACILITIES
S.E. REGION DESIGN & ENGINEERING SERVICES DIVISION

Angoon Ferry Terminal Improvements, Re-Bid

Ramp Framing Details

PATH: Q:\Ang\68502\MF\Planset\29-34 Ramp Framing.dwg

PLOT: PSPACE 1=1 Tab: Framing Details Fri, 12/Mar/10 11:20AM

REVISIONS NO.	DATE	DESCRIPTION	PROJECT DESIGNATION	YEAR	SHEET NO.	TOTAL SHEETS
			68502	2010	31	72

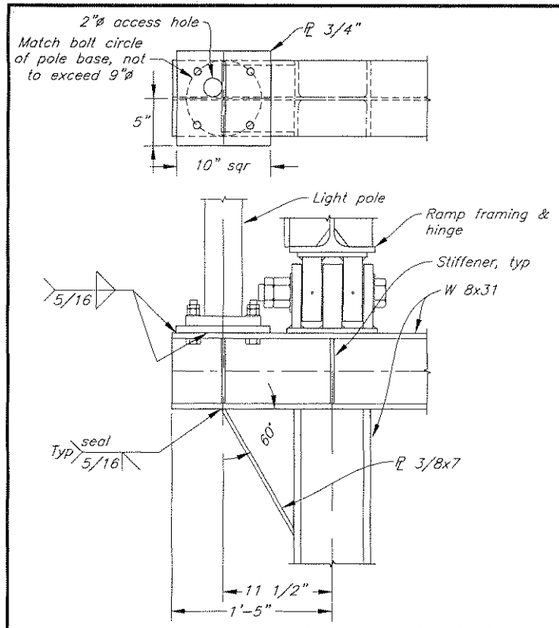

Luminaire Support Detail

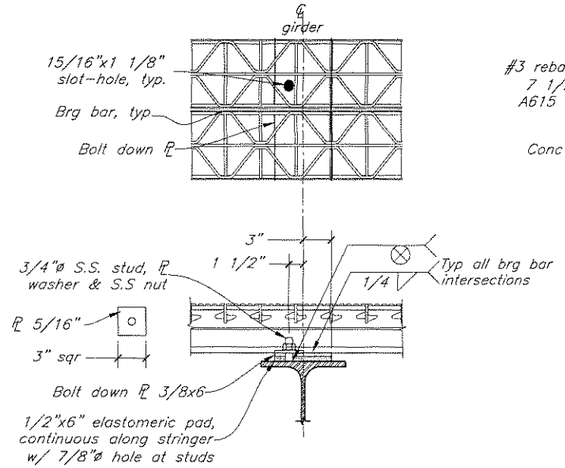

Bolt Down Plate

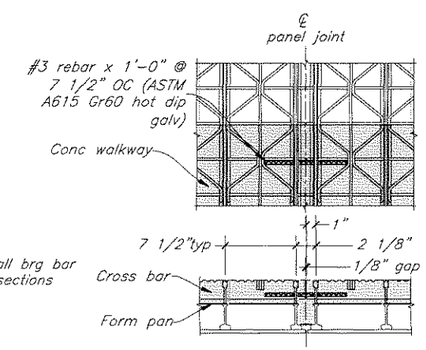

Typical Panel Joint

Grating Details

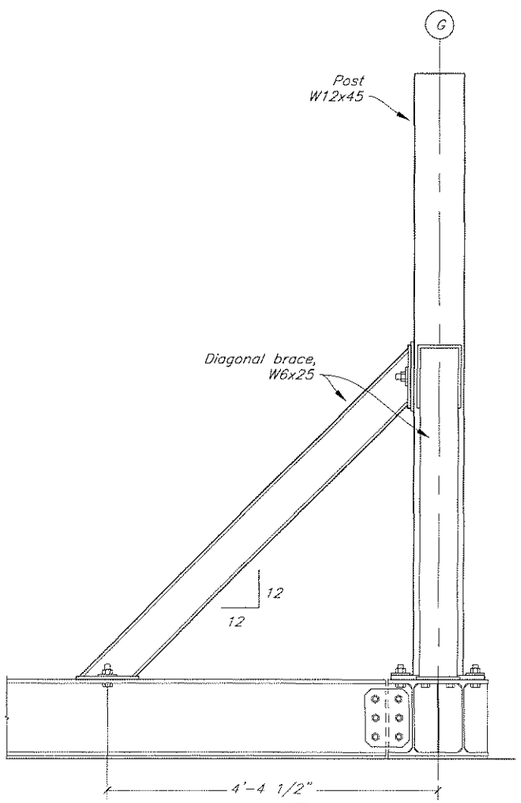

Elevation H/30

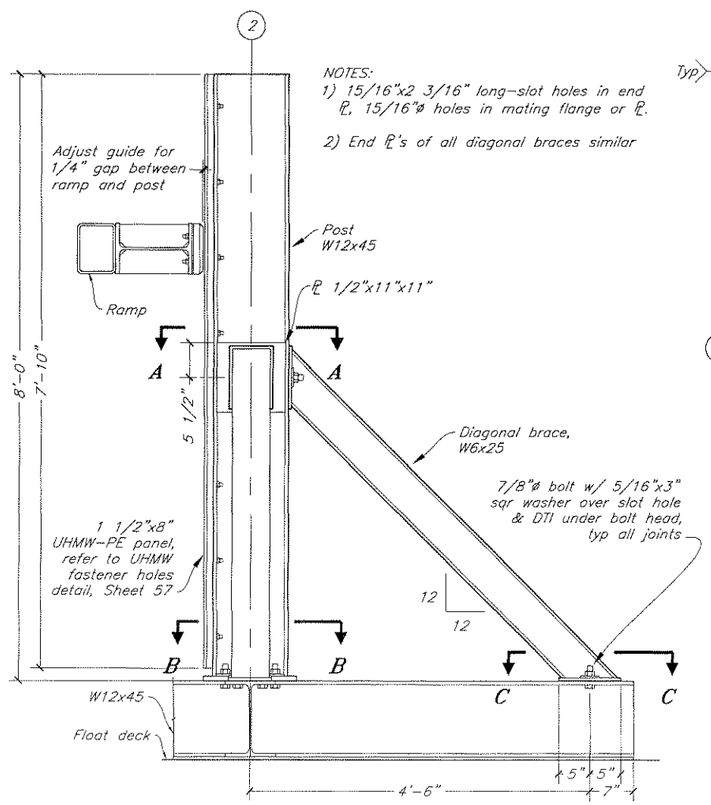

NOTES:
1) 15/16"x2 3/16" long-slot holes in end PL, 15/16"ø holes in mating flange or PL.
2) End PL's of all diagonal braces similar

Elevation K/30

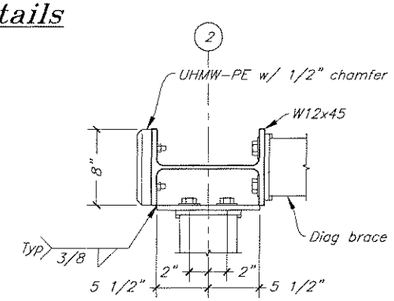

Section A-A

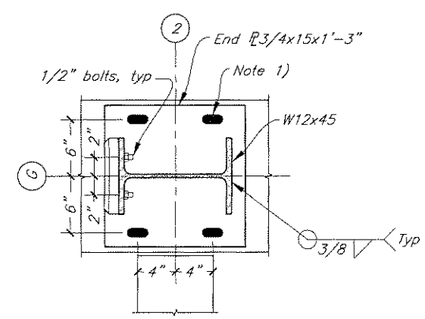

Section B-B

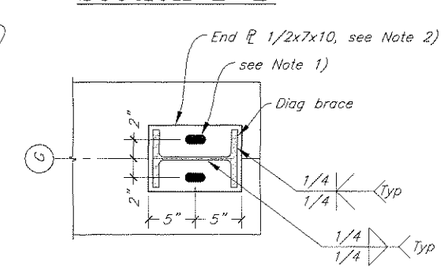

Section C-C

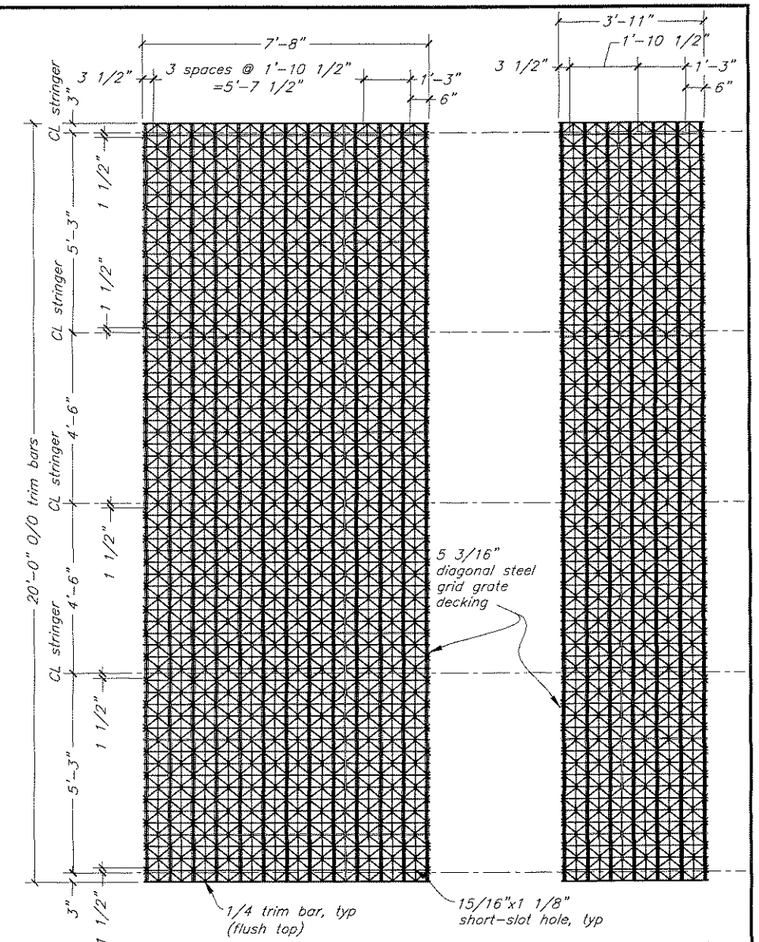

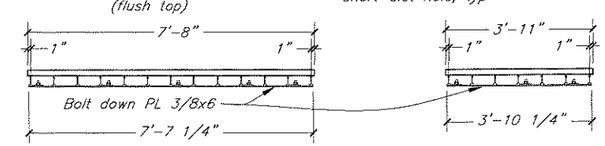

Deck Panel A

Deck Panel B

Deck Panels

Note: Concrete filled walkway not shown, see Sheet 28 for locations

DO NOT SCALE FROM THESE DRAWINGS USE DIMENSIONS

DESIGNED BY: T. Doggett

STATE OF ALASKA 49th Timothy H. Doggett CE-9027 REGISTERED PROFESSIONAL ENGINEER 3-12-10

CHECKED BY: K. Miller
DRAFTED BY: T. Doggett/C. Furman

STATE OF ALASKA
DEPARTMENT OF TRANSPORTATION & PUBLIC FACILITIES
S.E. REGION DESIGN & ENGINEERING SERVICES DIVISION

Angoon Ferry Terminal Improvements, Re-Bid

Ramp Guide & Decking

PATH: Q:\Ang\68502\MF\Planset\29-34 Ramp Framing.dwg
PLOT: PSPACE 1=1 Tab: Guide & Decking Fri, 12/Mar/10 11:20AM

REVISIONS			PROJECT DESIGNATION	YEAR	SHEET NO.	TOTAL SHEETS
NO.	DATE	DESCRIPTION	68502	2010	32	72

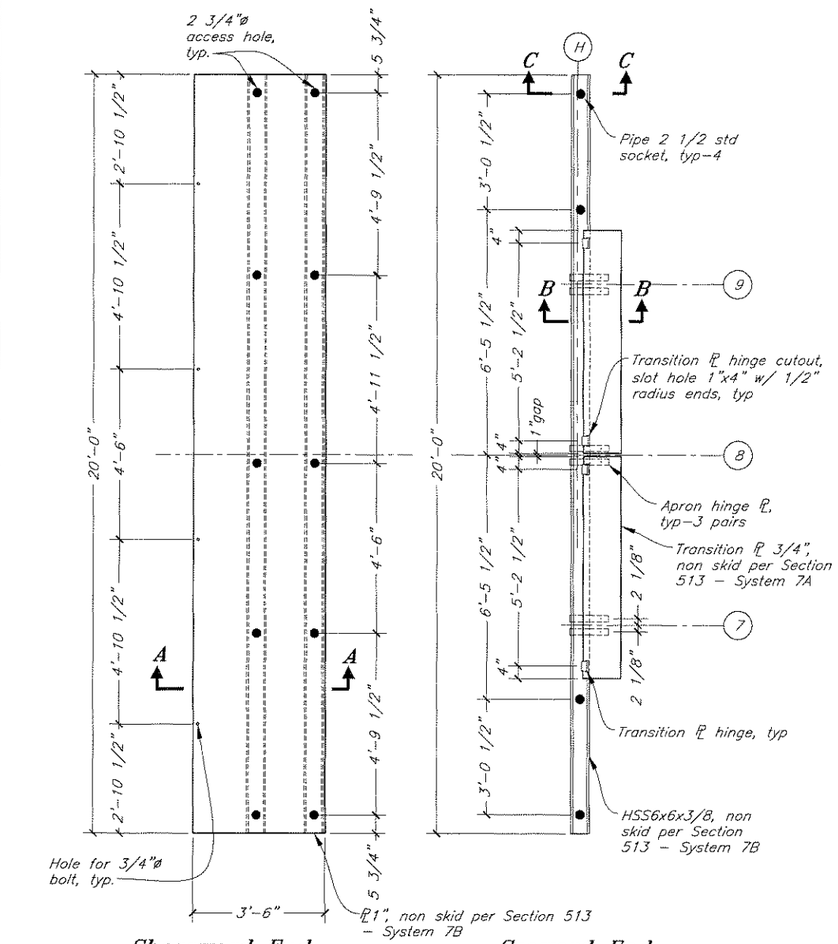

Shoreward End — Seaward End

Ramp Transition Plate (5/30)

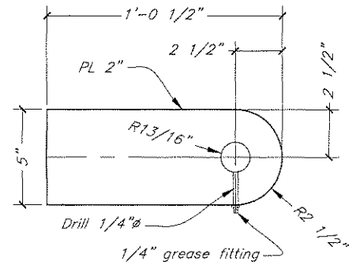

Apron Hinge PL

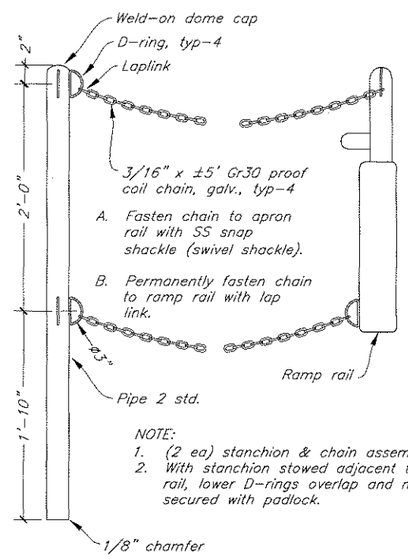

Stanchion & Chain (2/28)

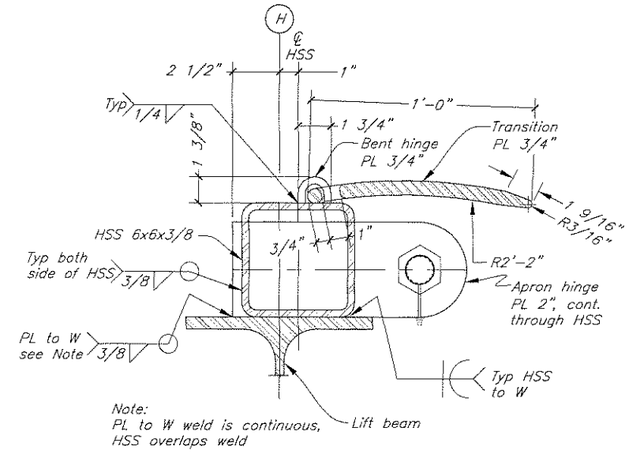

Section B-B

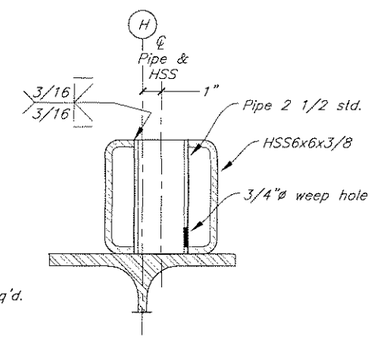

Section C-C

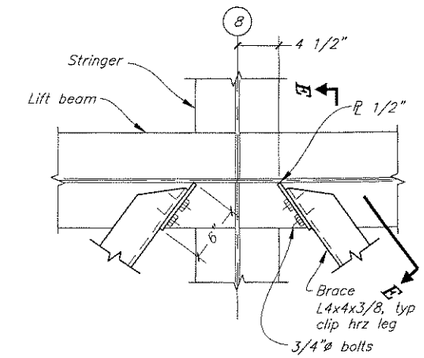

Detail (1/30)

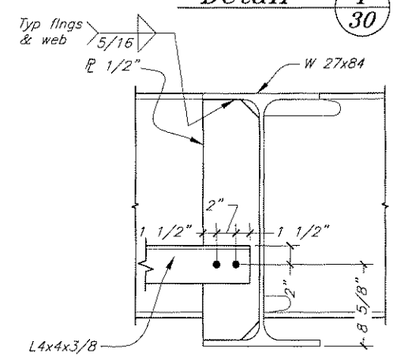

Section E-E

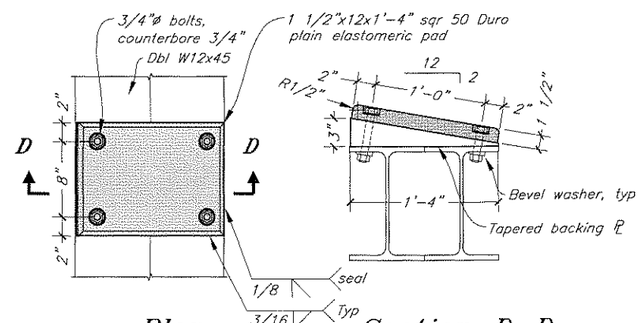

Plan — Section D-D

Detail (4/30)

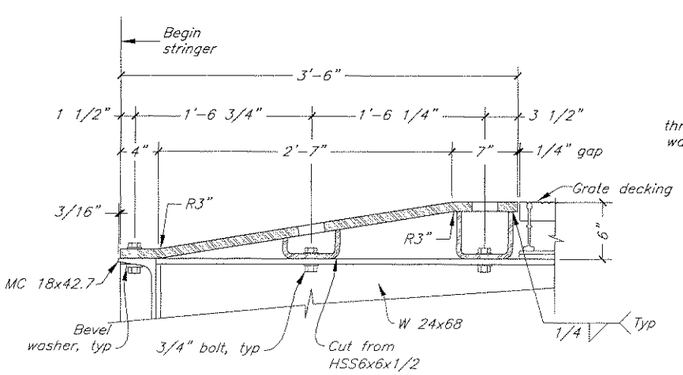

Section A-A

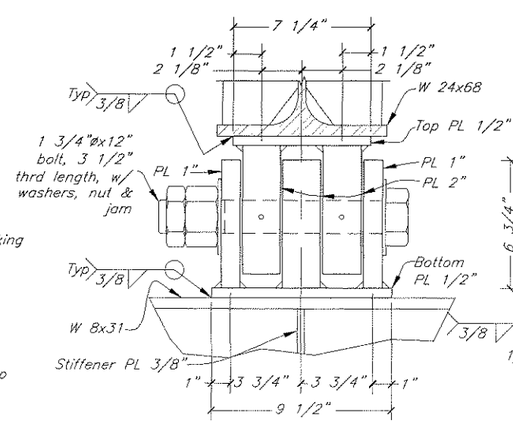

Front View

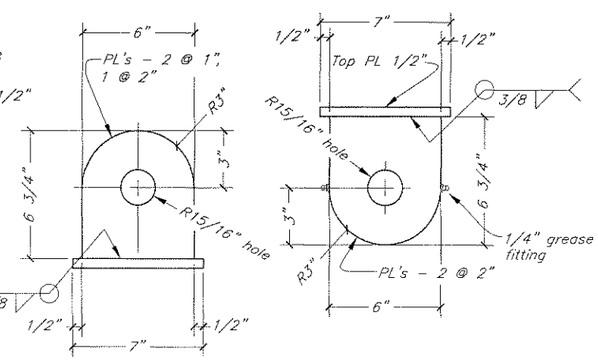

Side Views

Ramp Support Hinge

DO NOT SCALE FROM THESE DRAWINGS USE DIMENSIONS

DESIGNED BY: T. Doggett
CHECKED BY: K. Miller
DRAFTED BY: T. Doggett/C. Fumon

STATE OF ALASKA
DEPARTMENT OF TRANSPORTATION & PUBLIC FACILITIES
S.E. REGION DESIGN & ENGINEERING SERVICES DIVISION

Angoon Ferry Terminal Improvements, Re-Bid

Ramp Hinges & Transitions

PATH: Q:\Ang\68502\MF\Planset\29-34 Ramp Framing.dwg
PLOT: PSPACE 1=1 Tab: Transition & Hinges Fri, 12/Mar/10 01:44PM

REVISIONS NO.	DATE	DESCRIPTION	PROJECT DESIGNATION	YEAR	SHEET NO.	TOTAL SHEETS
			68502	2010	33	72

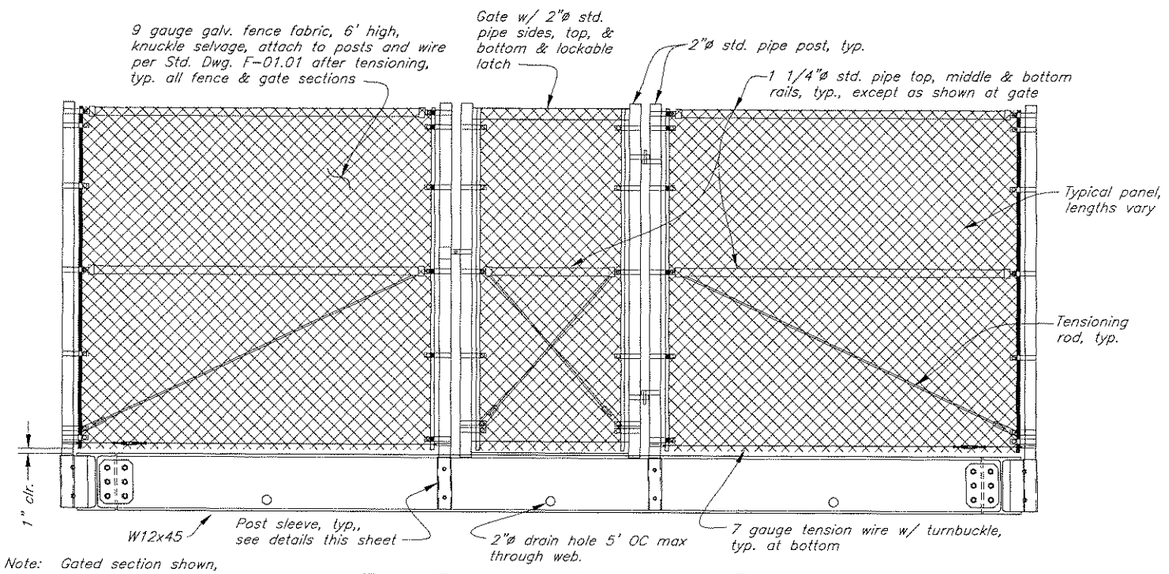

Note: Gated section shown, all other panels similar.

Typ Fencing Elevation (A/30)

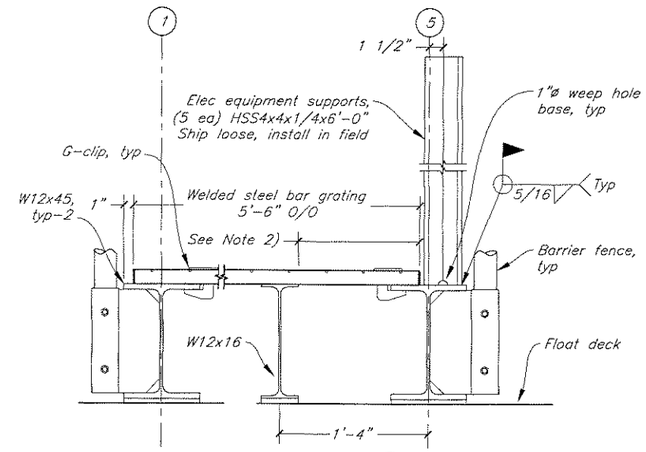

Section (L/30)

Note:

1) Equipment Enclosure grating shall be 24" nominal width panels of 1 1/2"x1/8" serrated bearing bars at 1 3/16" OC and cross bars at 4" OC with standard trim banding. Hot dip galvanize after fabrication. Fasten with G-clips or similar, min (4) clips per panel.
2) Grating may be neatly cut in this region to pass conduit. Touch up damaged galvanizing per Section 504-3.03.

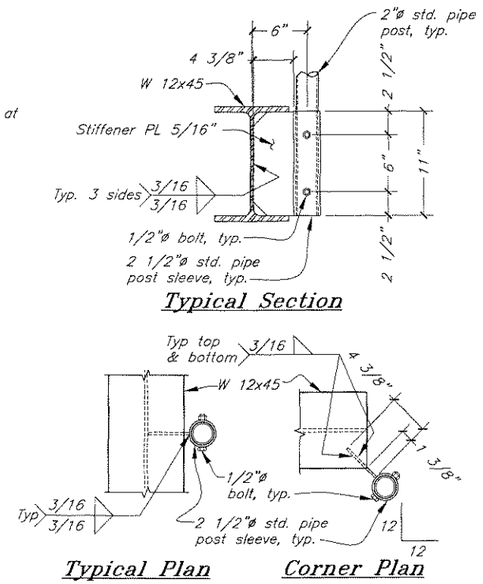

Typical Section

Typical Plan

Corner Plan

Detail (2/30)

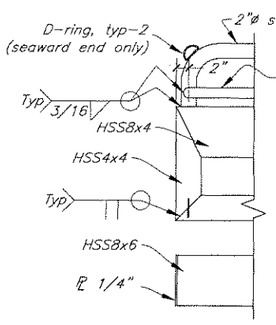

Rail End

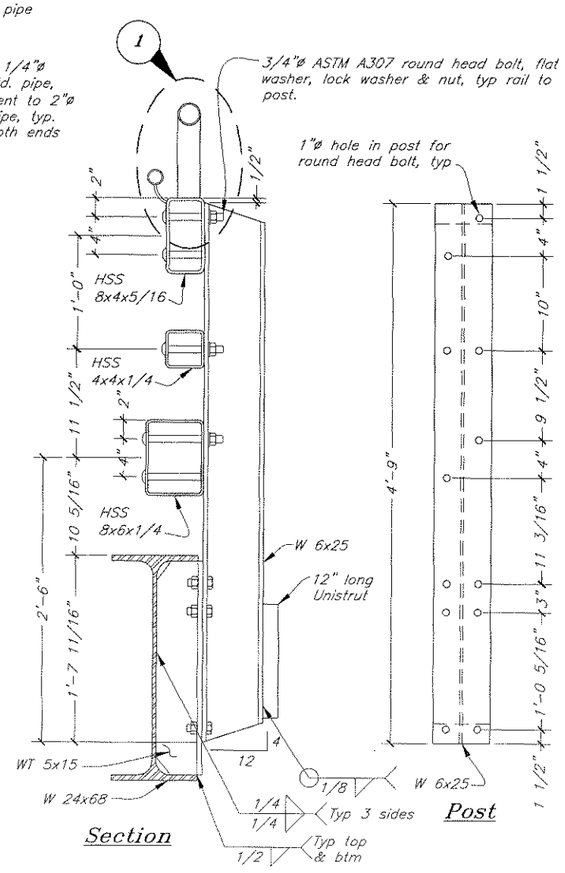

Section

Post

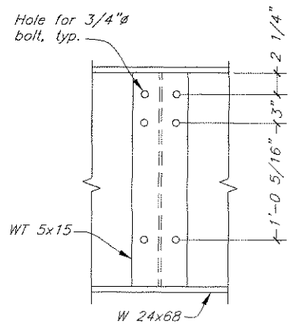

WT Stiffener

Railing Details

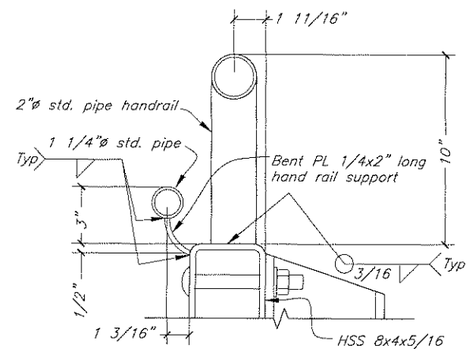

Detail (1/30)

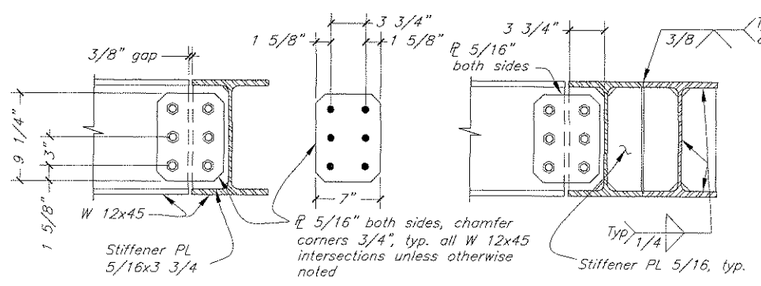

Section (B/30)

Section (C/30)

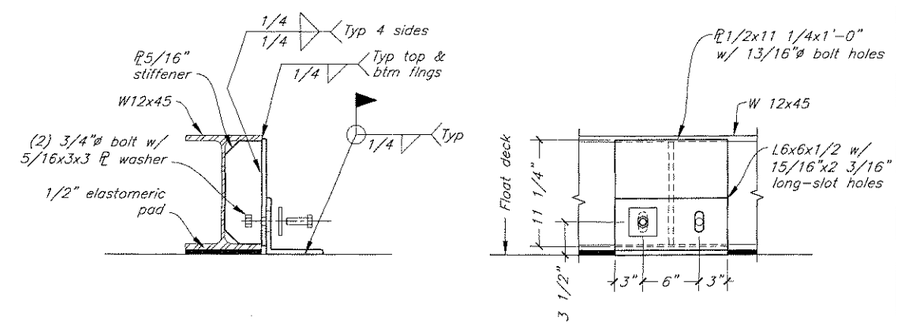

Section

Front View

Detail (6/25)

DO NOT SCALE FROM THESE DRAWINGS USE DIMENSIONS

DESIGNED BY: T. Doggett

STATE OF ALASKA 49th Timothy H. Doggett CE-9027 REGISTERED PROFESSIONAL ENGINEER

3-12-10

CHECKED BY: K. Miller

DRAFTED BY: T. Doggett/C. Fumon

STATE OF ALASKA
DEPARTMENT OF TRANSPORTATION
& PUBLIC FACILITIES
S.E. REGION DESIGN & ENGINEERING SERVICES DIVISION

Angoon Ferry Terminal Improvements, Re-Bid

Ramp Fencing & Railing

PATH: Q:\Ang\68502\MF\Planset\29-34 Ramp Framing.dwg

PLOT: PSPACE 1=1 Tab: Rail & Fence Details Fri, 12/Mar/10 11:21AM

REVISIONS			PROJECT DESIGNATION	YEAR	SHEET NO.	TOTAL SHEETS
NO.	DATE	DESCRIPTION	68502	2010	34	72

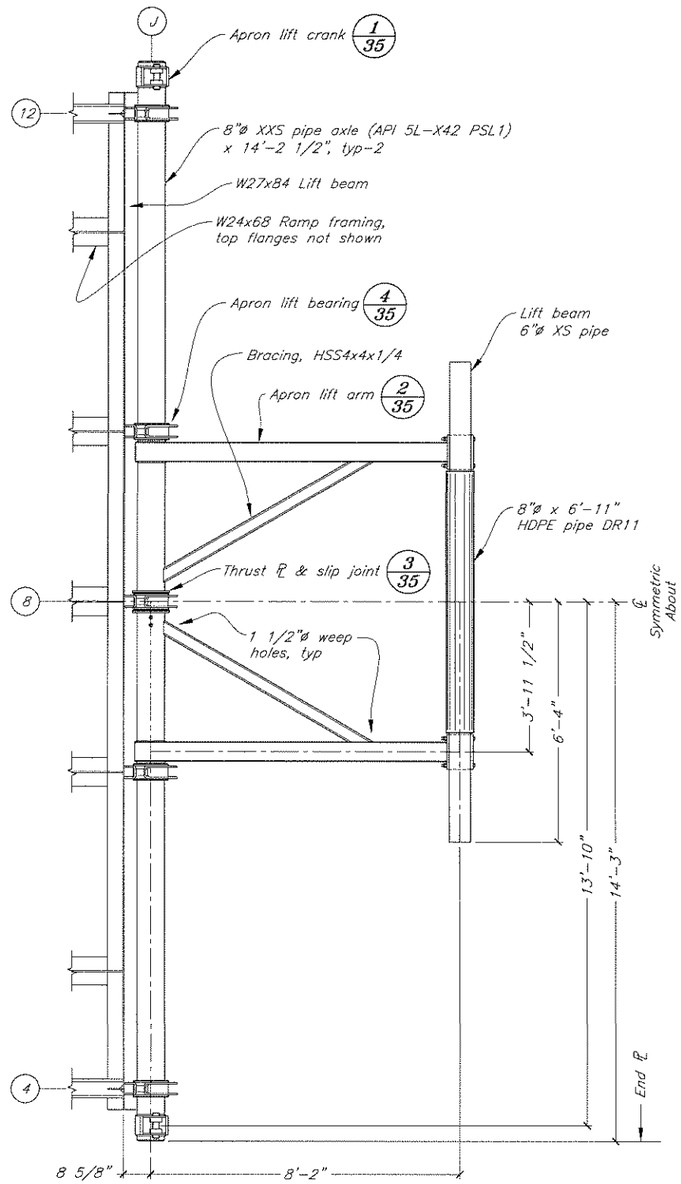

Plan

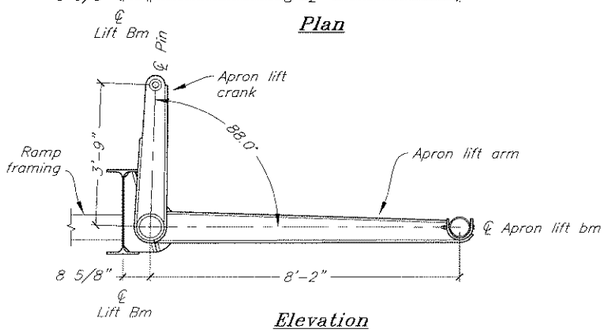

Elevation

Apron Lift Assembly

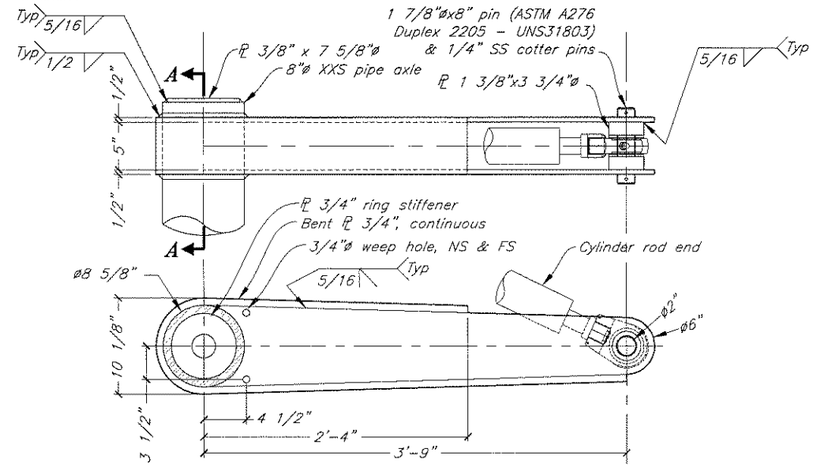

Apron Lift Crank 1/35

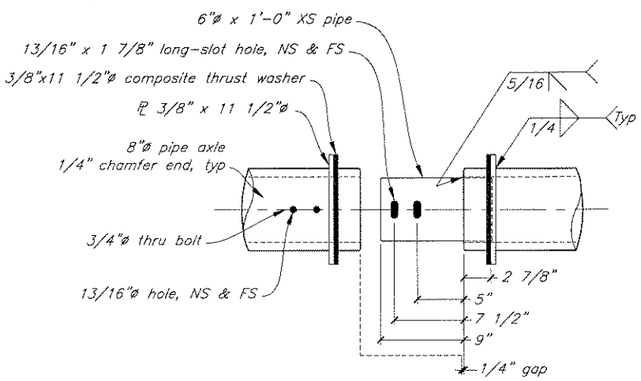

Thrust PL & Slip Joint 3/35

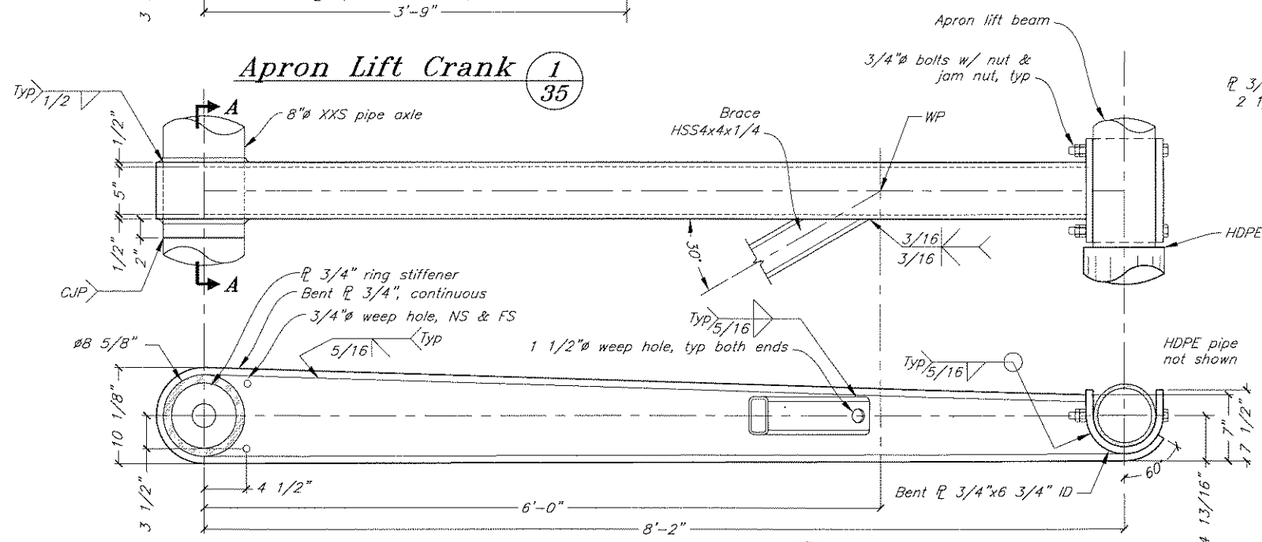

Apron Lift Arm 2/35

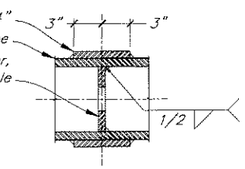

Section A-A

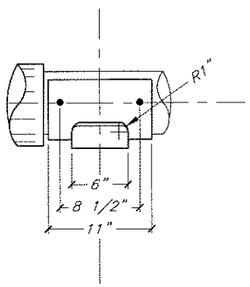

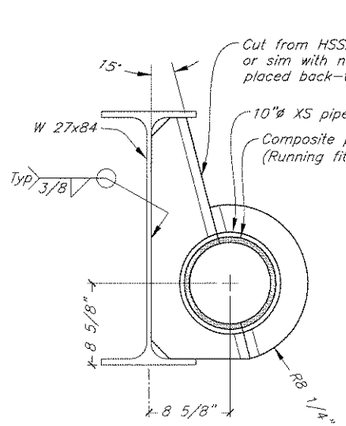

Side View

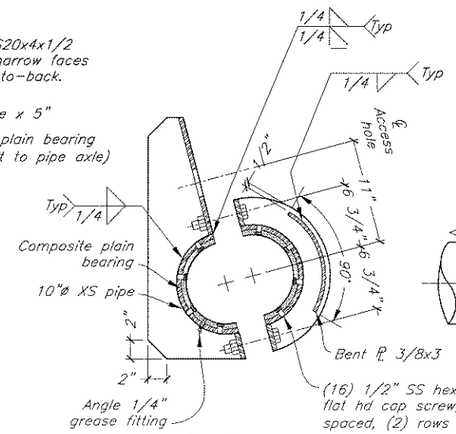

Section

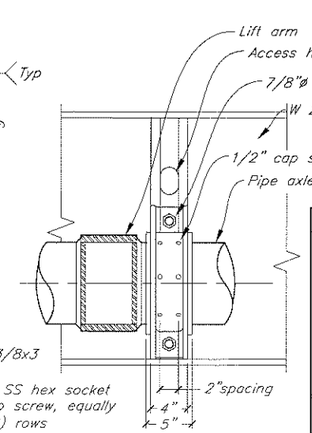

Front View (at lift arm)

Apron Lift Bearing 4/35

Composite bearings and composite thrust washers are cylindrical shells and flat plates of phenolic polymer resin reinforced with woven synthetic fiber cloth. Bearings and washers are marine grade with added molybdenum disulphide for improved lubrication. Acceptable materials are: Tenmat Feroform T12, Orkot TLM Marine, Columbia Industrial Products CIP Marine, or approved equal.

DO NOT SCALE FROM THESE DRAWINGS USE DIMENSIONS

DESIGNED BY: T. Doggett

STATE OF ALASKA 49th Timothy H. Doggett CE-9027 REGISTERED PROFESSIONAL ENGINEER 3-12-10

CHECKED BY: K. Miller

DRAFTED BY: T. Doggett/C. Furman

STATE OF ALASKA
DEPARTMENT OF TRANSPORTATION & PUBLIC FACILITIES
S.E. REGION DESIGN & ENGINEERING SERVICES DIVISION

Angoon Ferry Terminal Improvements, Re-Bid

Apron Lift Details

PATH: Q:\Ang\68502\MF\Planset\35 Apron Lift Details.dwg

PLOT: PSPACE 1=1 Tab: Lift Arm Fri, 12/Mar/10 11:48AM

REVISIONS			PROJECT DESIGNATION	YEAR	SHEET NO.	TOTAL SHEETS
NO.	DATE	DESCRIPTION	68502	2010	35	72

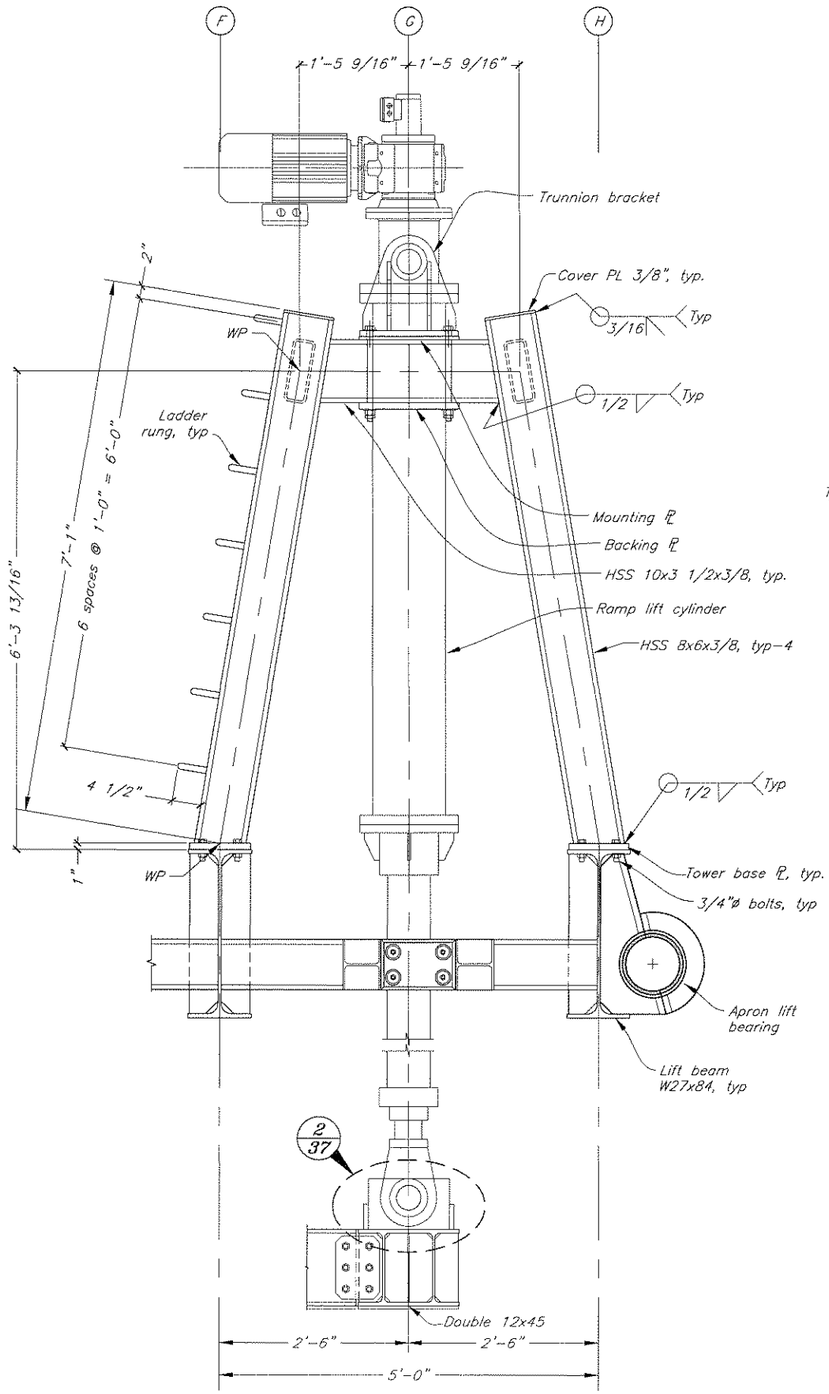

Side Elevation

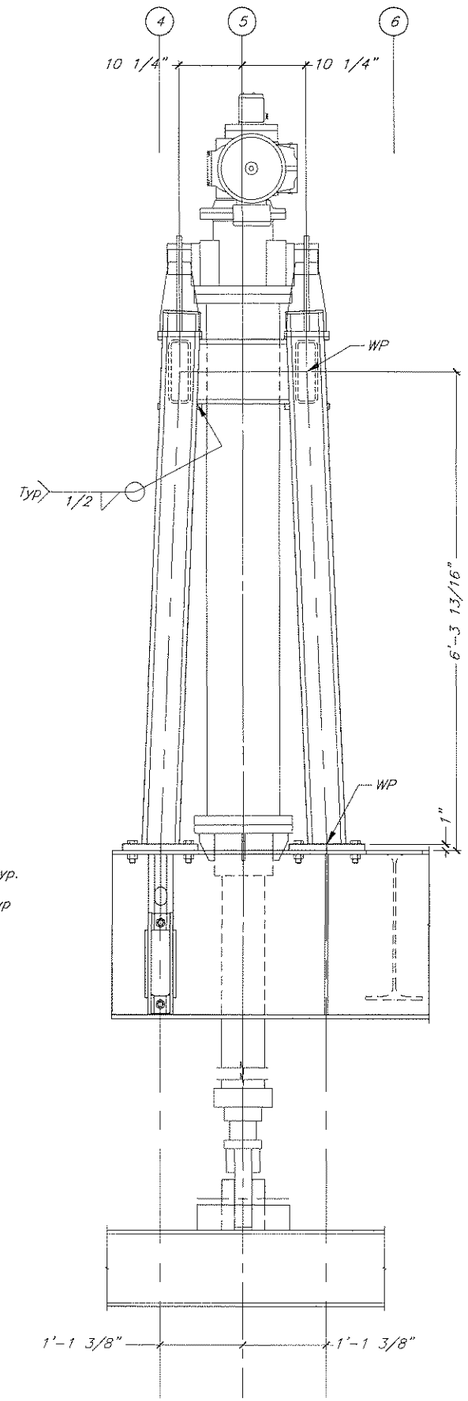

Front Elevation

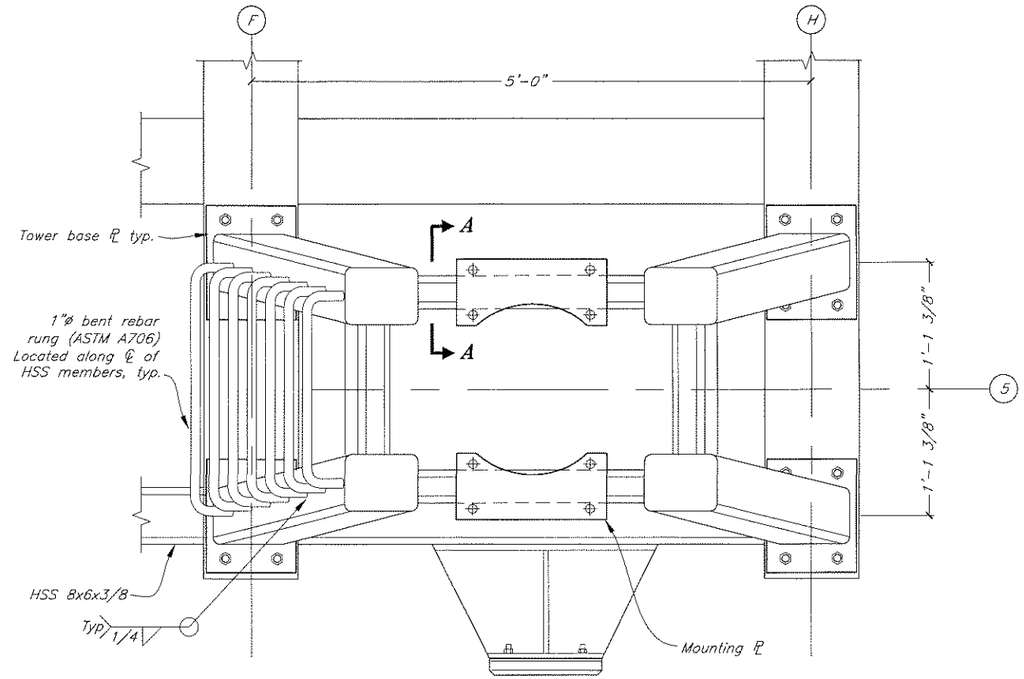

Plan

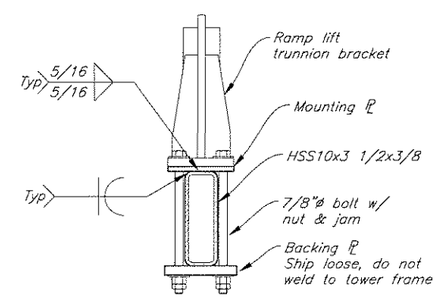

Section A-A

DO NOT SCALE FROM THESE DRAWINGS USE DIMENSIONS

DESIGNED BY: T. Doggett

STATE OF ALASKA 49th Timothy H. Doggett CE-9027 REGISTERED PROFESSIONAL ENGINEER 3-12-10

CHECKED BY: K. Miller

DRAFTED BY: T. Doggett/C. Furman

STATE OF ALASKA
DEPARTMENT OF TRANSPORTATION
& PUBLIC FACILITIES
S.E. REGION DESIGN & ENGINEERING SERVICES DIVISION

Angoon Ferry Terminal
Improvements, Re-Bid

Ramp Lift Tower

PATH: Q:\Ang\68502\MF\Planset\36-37 Ramp Lift Tower.dwg

PLOT: PSPACE 1=1 Tab: Lift Tower Fri, 12/Mar/10 11:48AM

REVISIONS			PROJECT DESIGNATION	YEAR	SHEET NO.	TOTAL SHEETS
NO.	DATE	DESCRIPTION	68502	2010	36	72

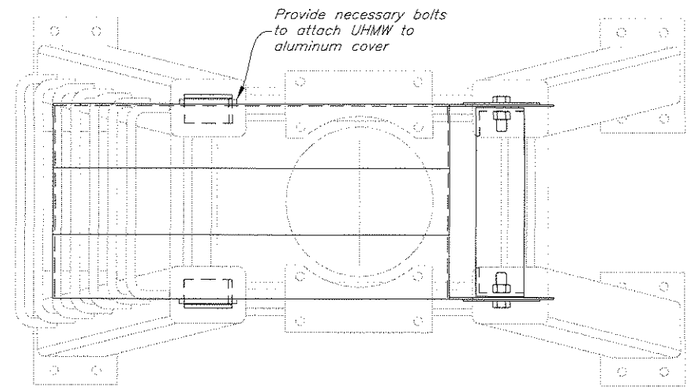

Latch clamp not shown for clarity in Plan & Side Elevation views.

Plan

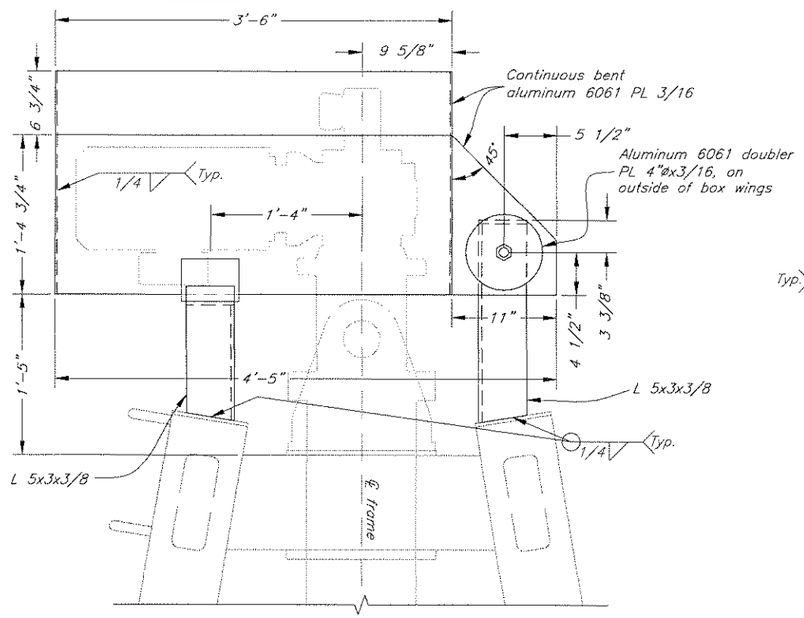

Side Elevation

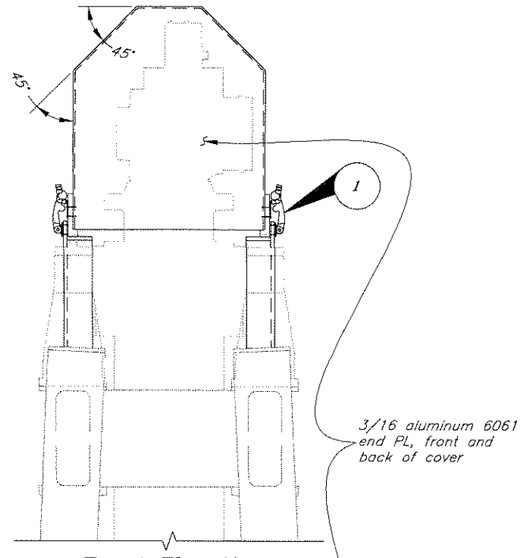

Front Elevation

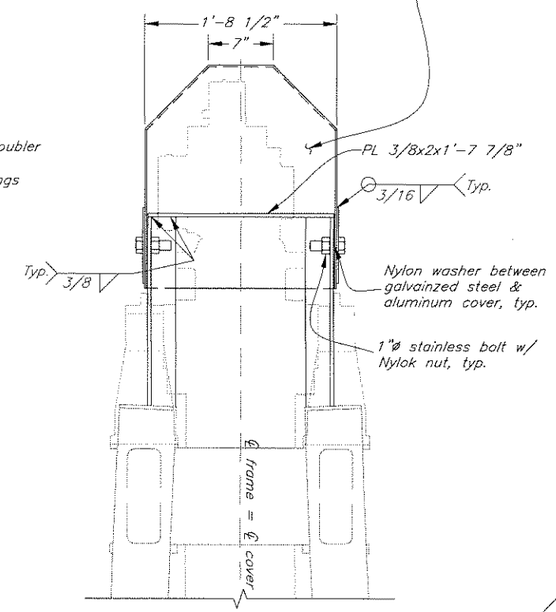

Back Elevation

Ramp Lift Motor Cover Assembly

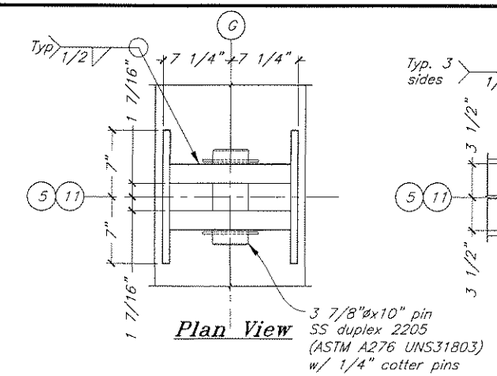

Plan View

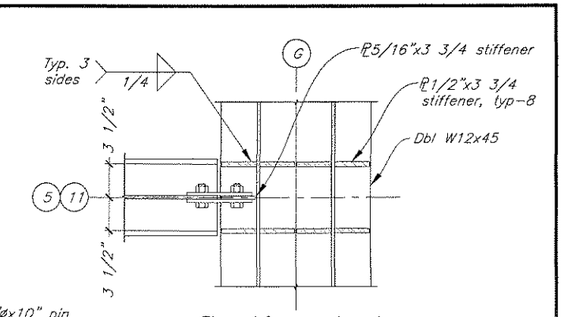

Section A-A

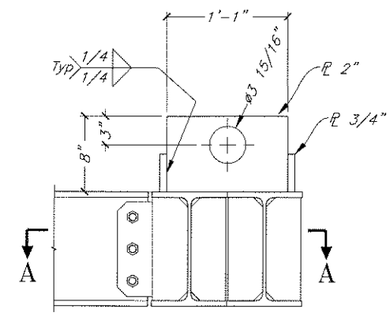

Side View

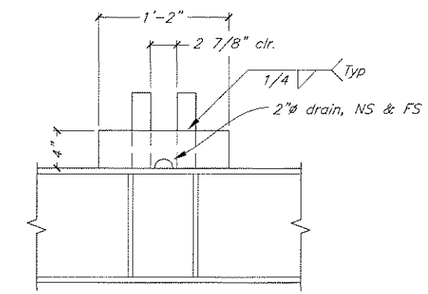

Front View

Detail 2/36

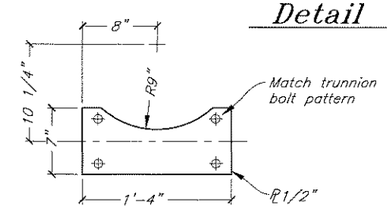

Mounting Plate

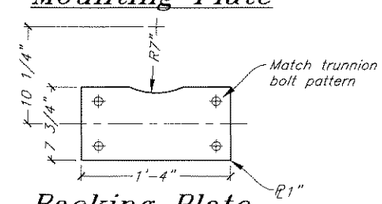

Backing Plate

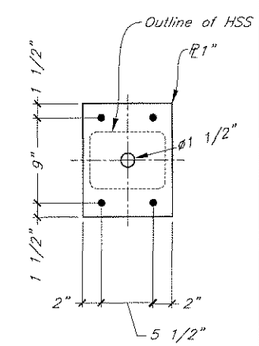

Tower Base Plate

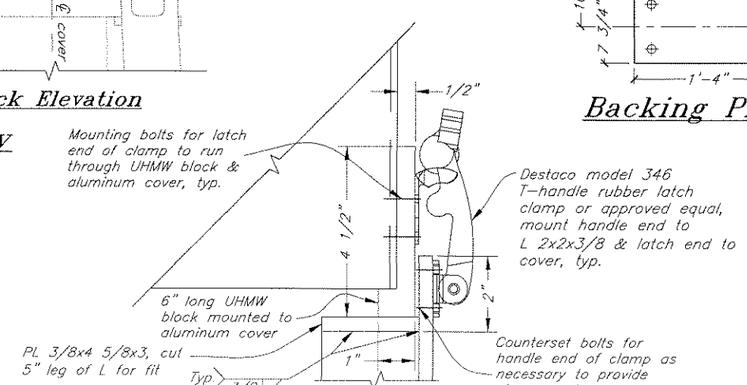

Detail 1
Cover Latch

DO NOT SCALE FROM THESE DRAWINGS USE DIMENSIONS

DESIGNED BY: T. Doggett

STATE OF ALASKA 49th Timothy H. Doggett CE-9027 REGISTERED PROFESSIONAL ENGINEER

3-12-10

CHECKED BY: K. Miller

DRAFTED BY: T. Doggett/C. Fumon

STATE OF ALASKA
DEPARTMENT OF TRANSPORTATION
& PUBLIC FACILITIES
S.E. REGION DESIGN & ENGINEERING SERVICES DIVISION

Angoon Ferry Terminal Improvements, Re-Bid

Ramp Lift Tower Details

PATH: O:\Ang\68502\MF\Planset\36-37 Ramp Lift Tower.dwg

PLOT: PSPACE 1=1 Tab: Details Fri, 12/Mar/10 11:48AM

REVISIONS			PROJECT DESIGNATION	YEAR	SHEET NO.	TOTAL SHEETS
NO.	DATE	DESCRIPTION	68502	2010	37	72

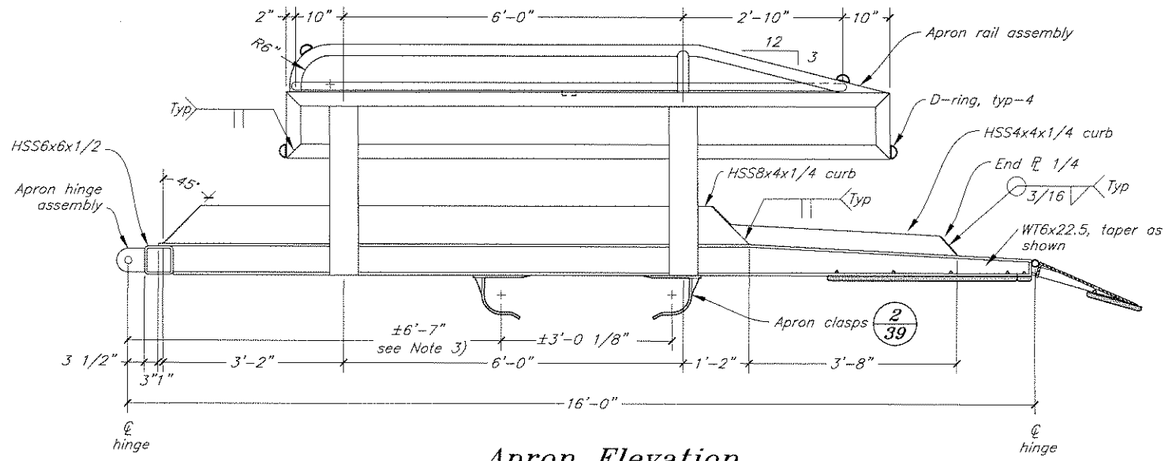

Apron Elevation

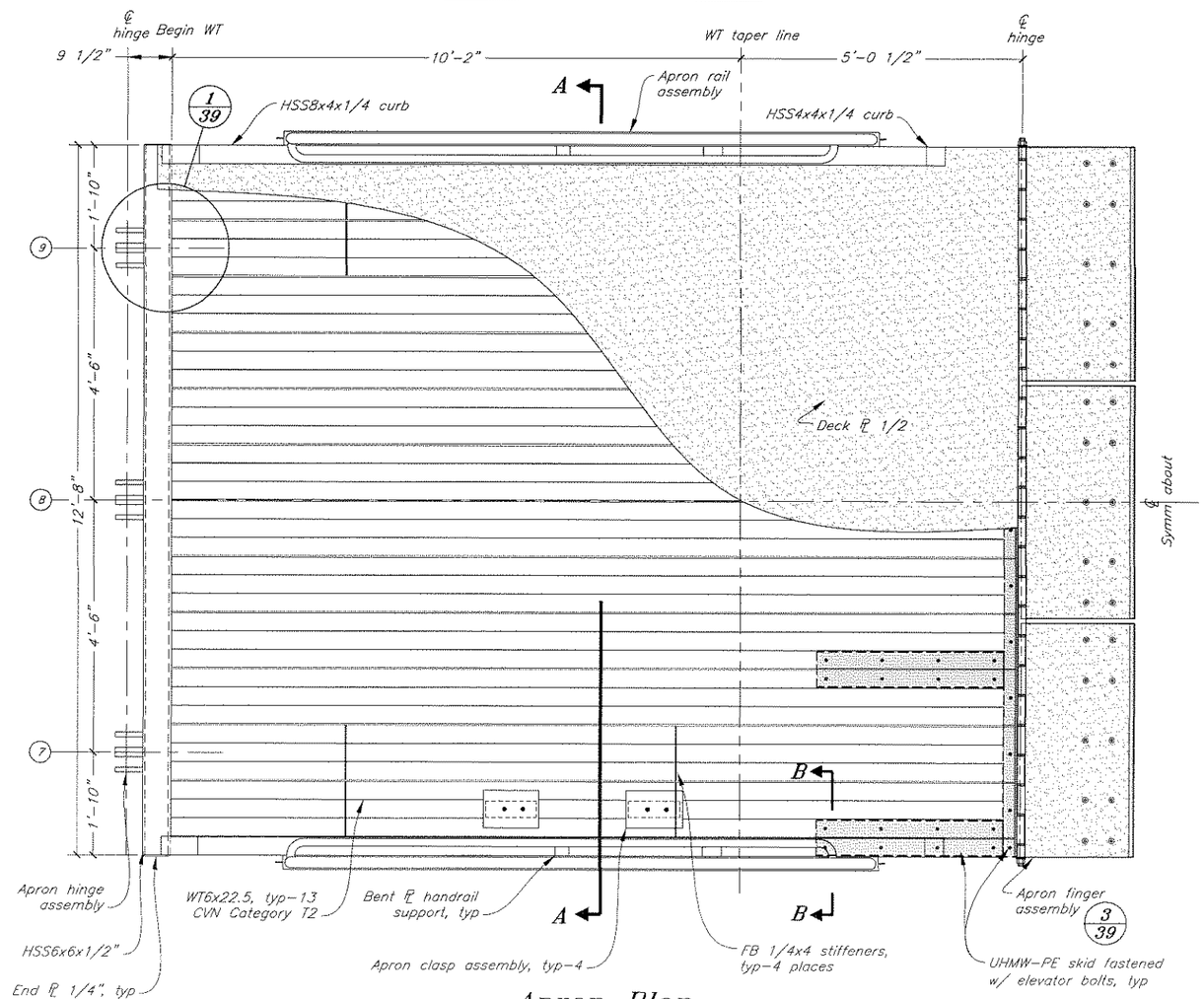

Apron Plan

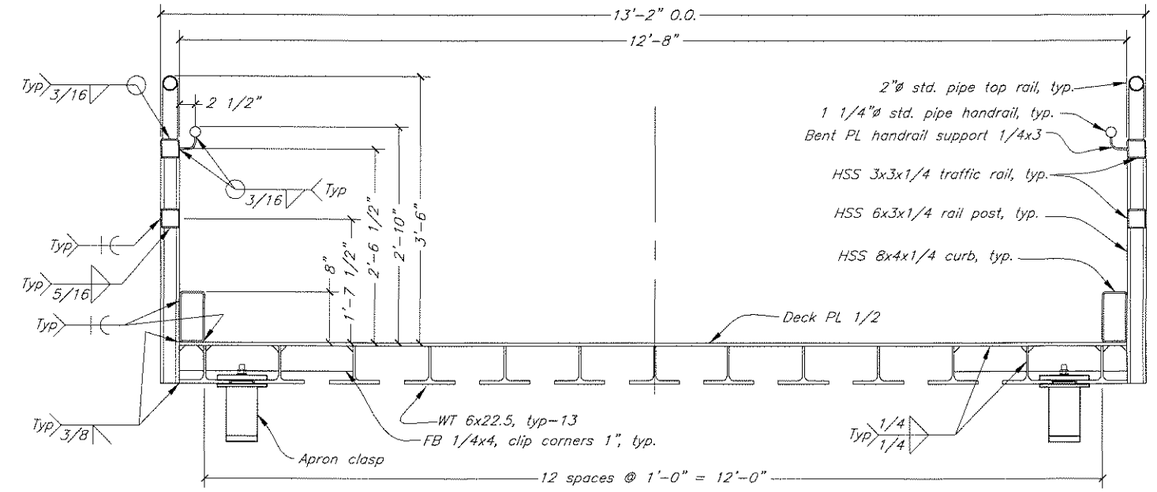

Section A-A

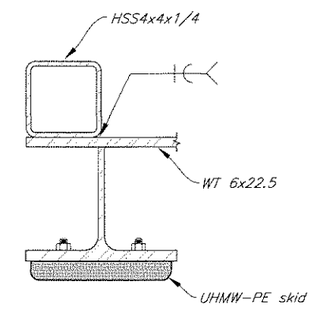

Section B-B

NOTES:

1. WT 6x22.5 stringers of the apron framing are main load carrying members. These shall comply with ASTM A709 Gr50 and Charpy requirements on Sheet 11.
2. Deck shall be coated with non-skid epoxy coating applied with serrated trowel, Section 513 System 7A.
3. Field locate apron clasps with apron in full-up and full-down position.

DO NOT SCALE FROM THESE DRAWINGS USE DIMENSIONS

DESIGNED BY: T. Doggett

STATE OF ALASKA 49th Timothy H. Doggett CE-9027 REGISTERED PROFESSIONAL ENGINEER 3-12-10

CHECKED BY: K. Miller
DRAFTED BY: T. Doggett/C. Furman

STATE OF ALASKA
DEPARTMENT OF TRANSPORTATION
& PUBLIC FACILITIES
S.E. REGION DESIGN & ENGINEERING SERVICES DIVISION

Angoon Ferry Terminal Improvements, Re-Bid

Apron Details 1

PATH: Q:\Ang\68502\MF\Planset\38 Apron Details 1.dwg
PLOT: PSPACE 1=1 Fri, 12/Mar/10 11:49AM

REVISIONS NO.	DATE	DESCRIPTION	PROJECT DESIGNATION	YEAR	SHEET NO.	TOTAL SHEETS
			68502	2010	38	72

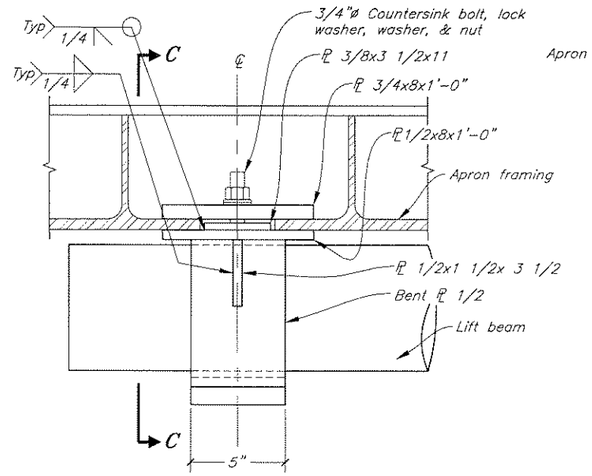

Apron Clasp Assembly (2/38)

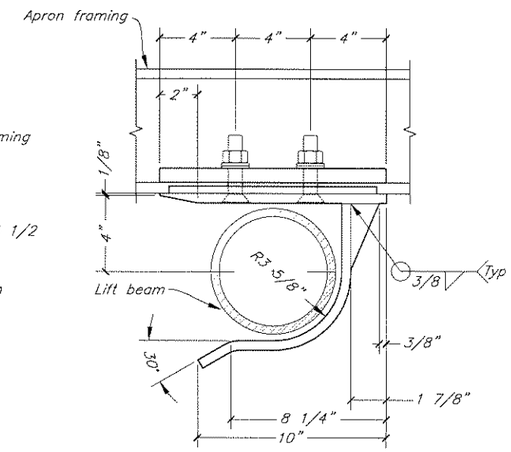

Section C-C

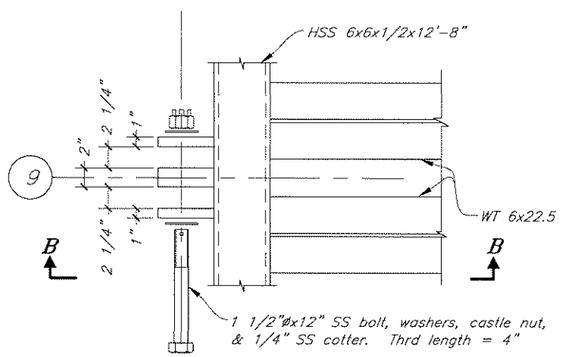

Detail (1/38)

Note: Deck PL not shown for clarity

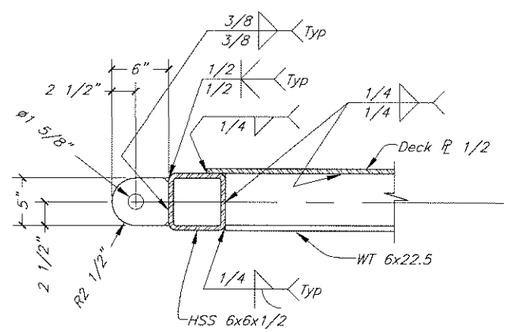

Section B-B

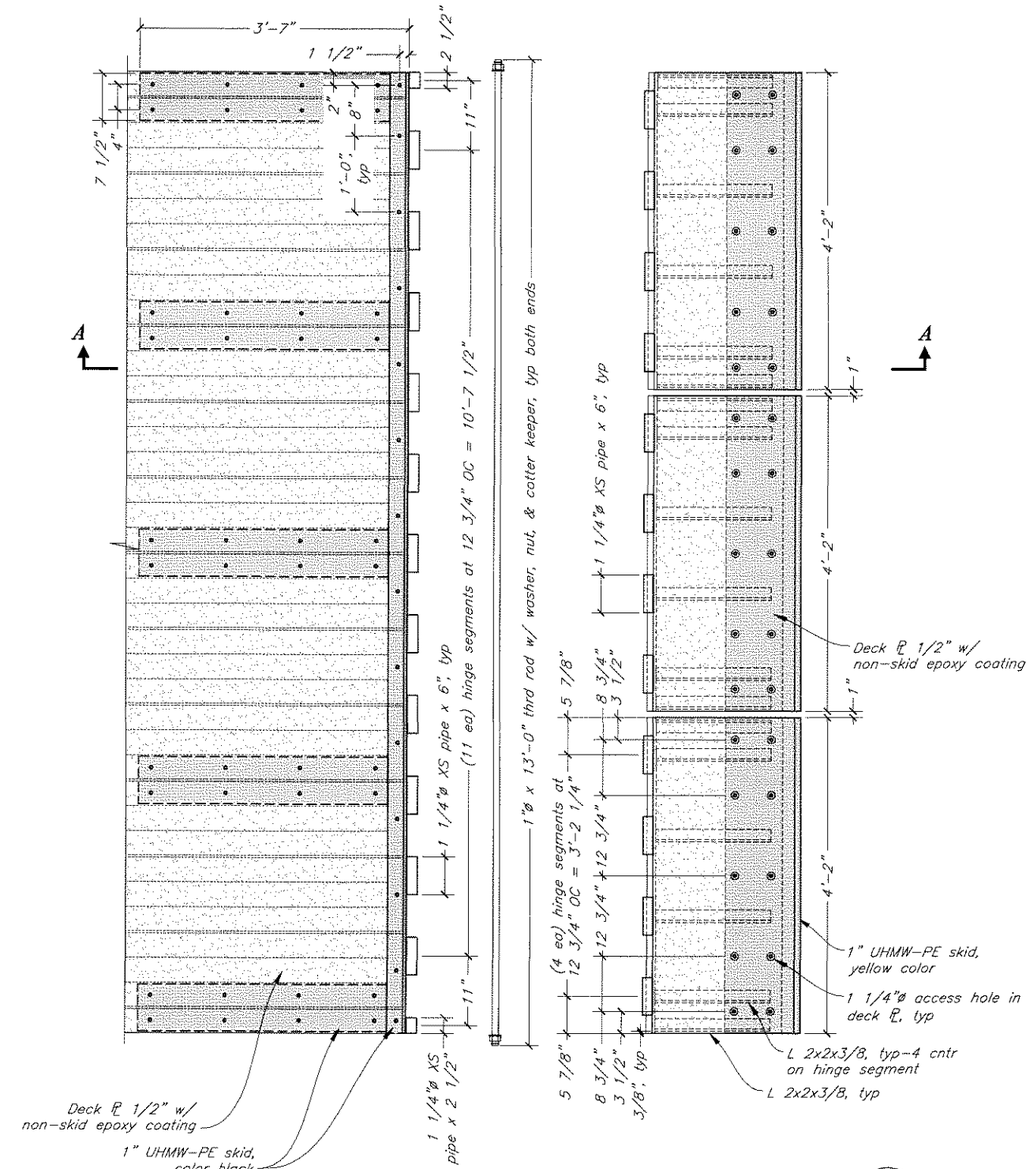

Apron Finger Assembly (3/38)

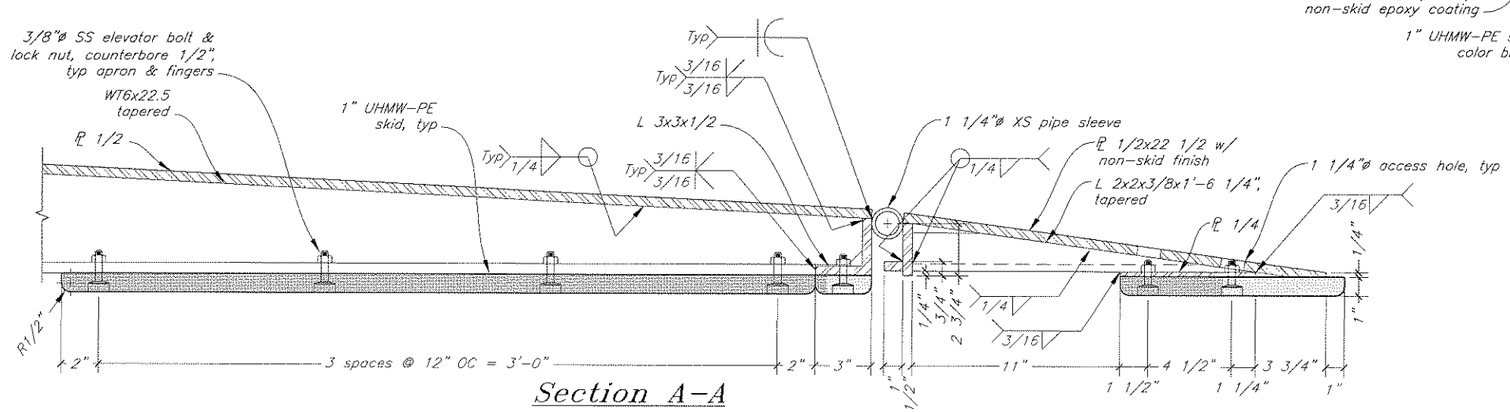

Section A-A

DO NOT SCALE FROM THESE DRAWINGS USE DIMENSIONS

DESIGNED BY: T. Doggett

STATE OF ALASKA 49th Timothy H. Doggett CE-9027 REGISTERED PROFESSIONAL ENGINEER

3-12-10

CHECKED BY: K. Miller

DRAFTED BY: T. Doggett/C. Fuman

STATE OF ALASKA
DEPARTMENT OF TRANSPORTATION
& PUBLIC FACILITIES
S.E. REGION DESIGN & ENGINEERING SERVICES DIVISION

Angoon Ferry Terminal
Improvements, Re-Bid

Apron Details 2

PATH: Q:\Ang\68502\MF\Planset\39 Apron Details 2.dwg
PLOT: PSPACE 1=1 Fri, 12/Mar/10 11:49AM

REVISIONS NO.	DATE	DESCRIPTION	PROJECT DESIGNATION	YEAR	SHEET NO.	TOTAL SHEETS
			68502	2010	39	72

Apron and lift assembly not shown.

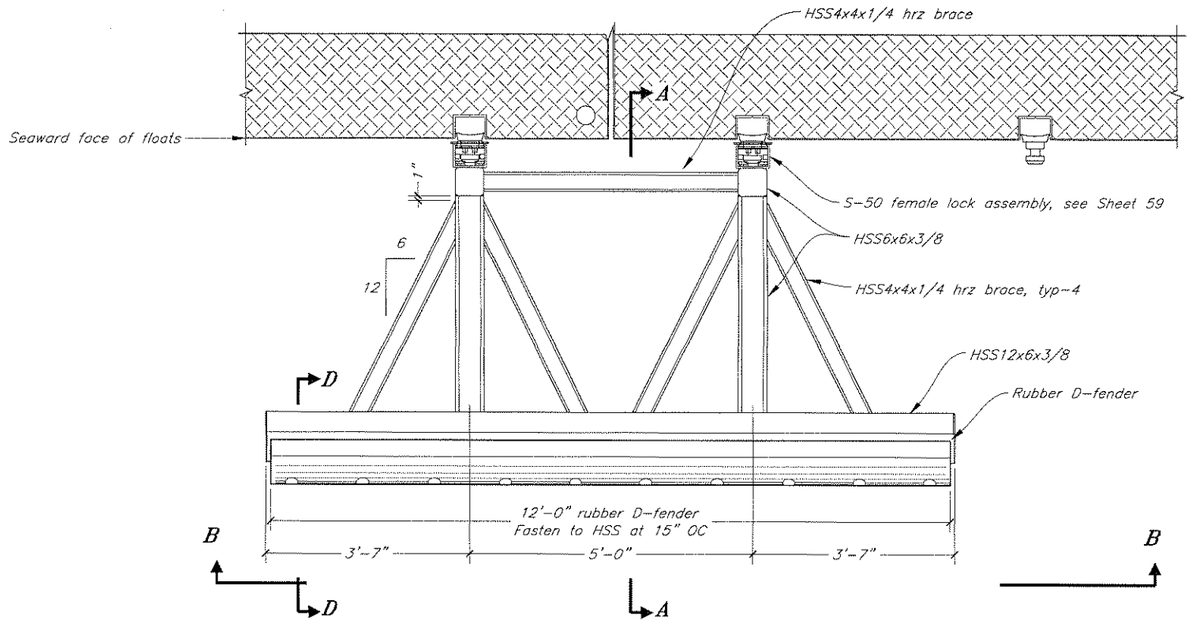

Plan - Apron Cradle

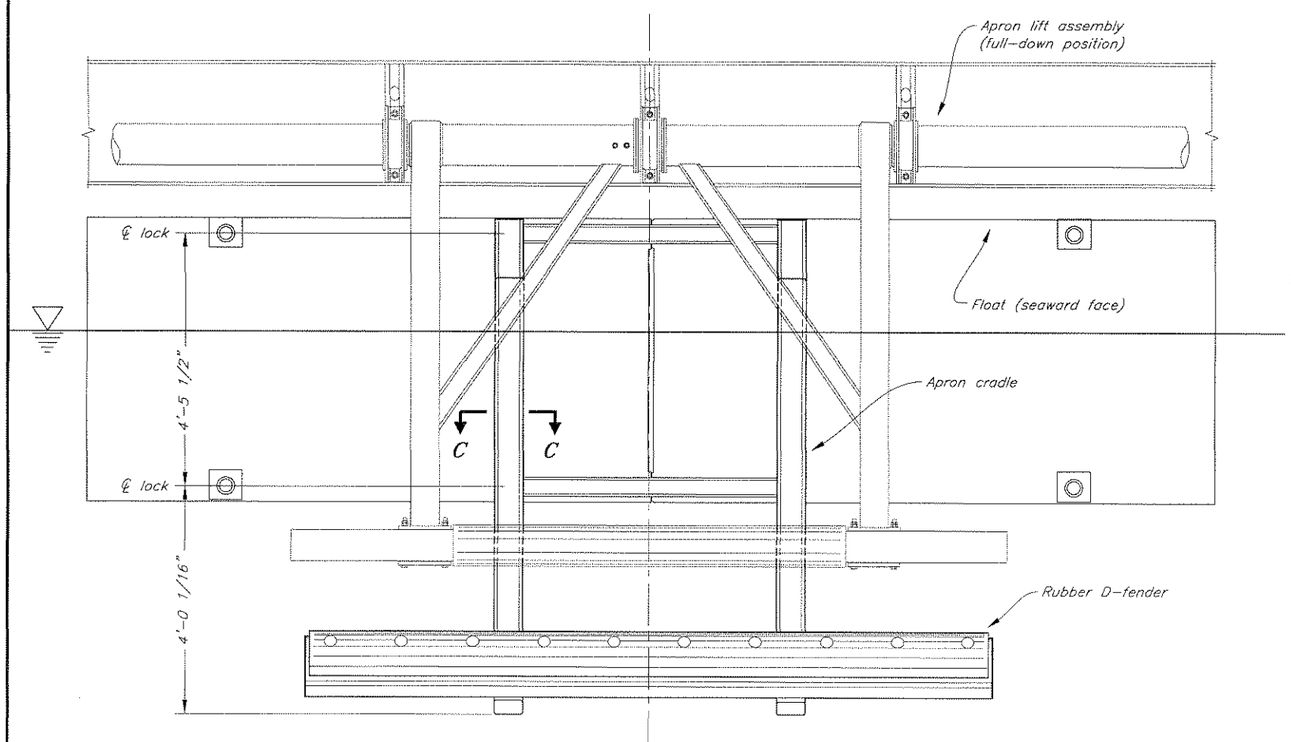

Elevation B-B

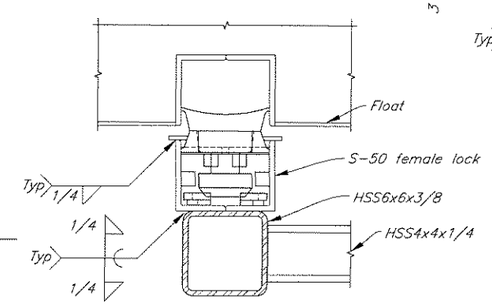

Section C-C

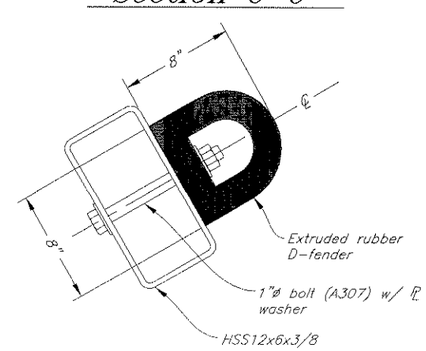

Section D-D

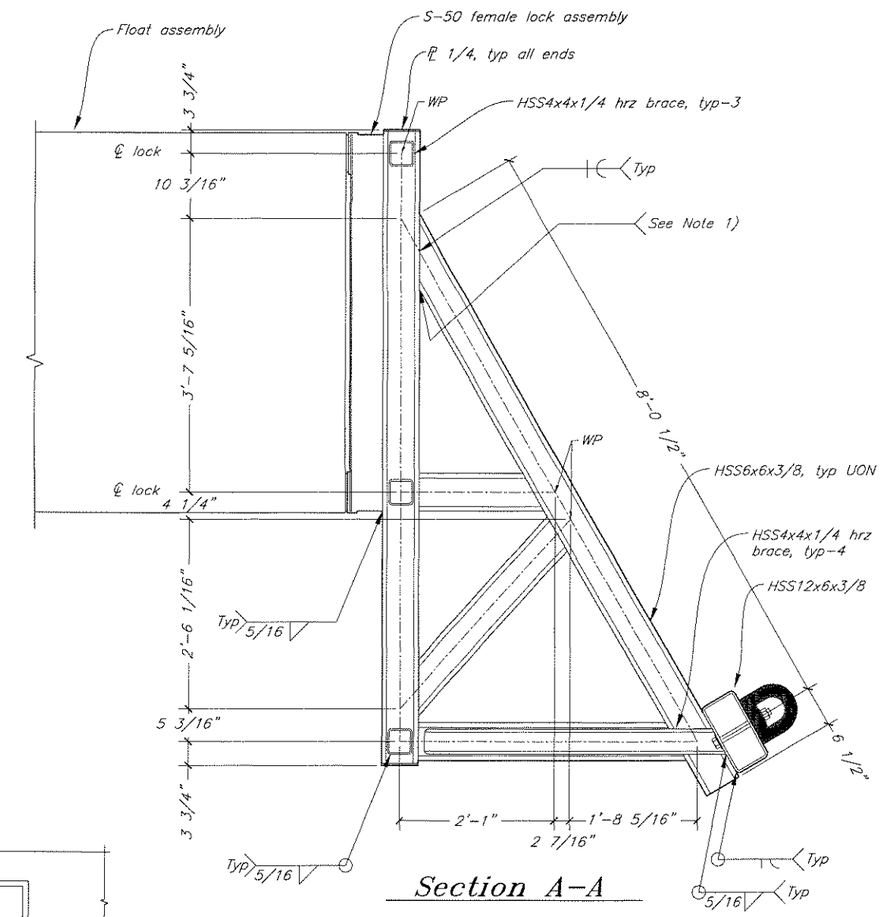

Section A-A

NOTE:

1. Welds along toe and heel of sloping members shall be 5/16" fillet for enclosed angles between 120° and 60°. Angles beyond these limits shall be 5/16" PJP groove welds.
2. Seal ends of all tubes with ℙ1/4".

DO NOT SCALE FROM THESE DRAWINGS USE DIMENSIONS

DESIGNED BY: T. Doggett

STATE OF ALASKA
49th
Timothy H. Doggett
CE-9027
REGISTERED PROFESSIONAL ENGINEER
3-12-10

CHECKED BY: K. Miller
DRAFTED BY: T. Doggett/C. Fumon

STATE OF ALASKA
DEPARTMENT OF TRANSPORTATION
& PUBLIC FACILITIES
S.E. REGION DESIGN & ENGINEERING SERVICES DIVISION

Angoon Ferry Terminal
Improvements, Re-Bid

Apron Cradle

PATH: O:\Ang\68502\MF\Planset\40 Apron Cradle.dwg
PLOT: PSPACE 1=1 Fri, 12/Mar/10 11:50AM

REVISIONS			PROJECT DESIGNATION	YEAR	SHEET NO.	TOTAL SHEETS
NO.	DATE	DESCRIPTION	68502	2010	40	72

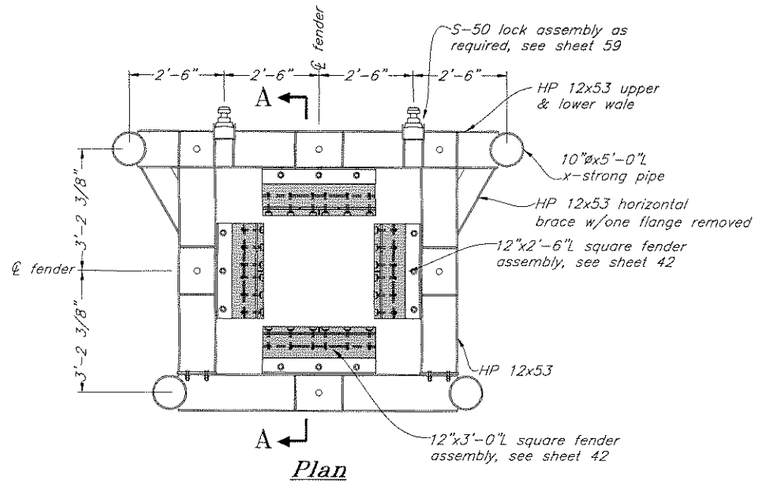

Plan

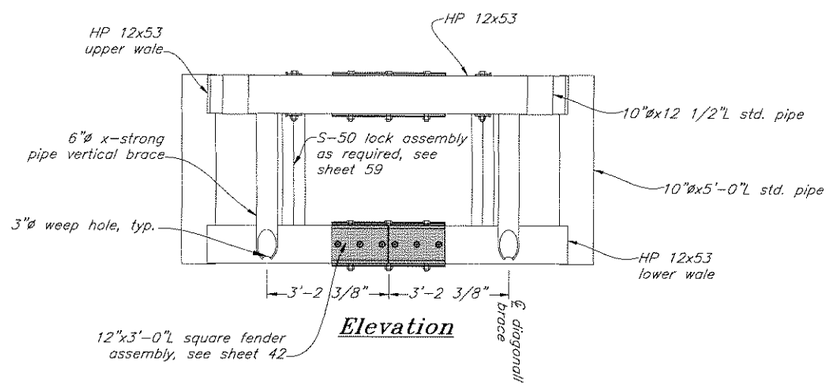

Elevation

Float Restraint Collar Assembly

(3 w/Male lock & 1 w/Female lock)

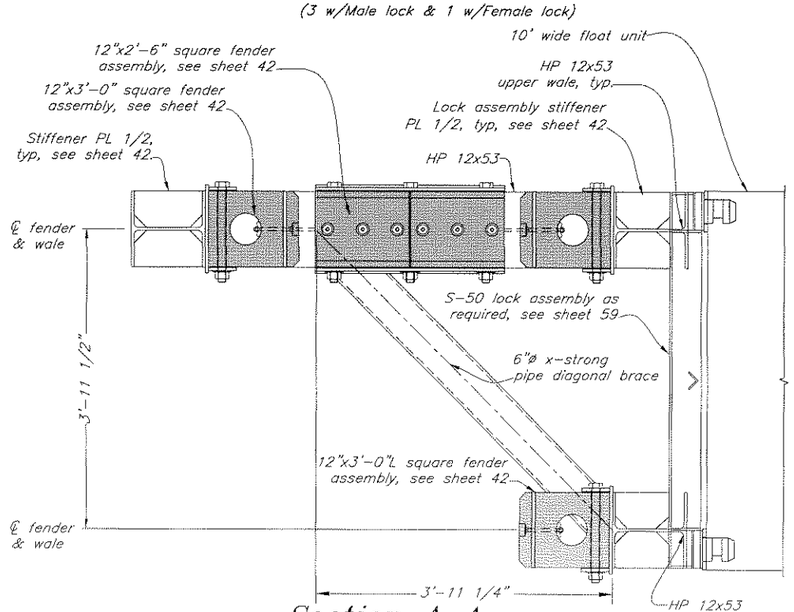

Section A-A

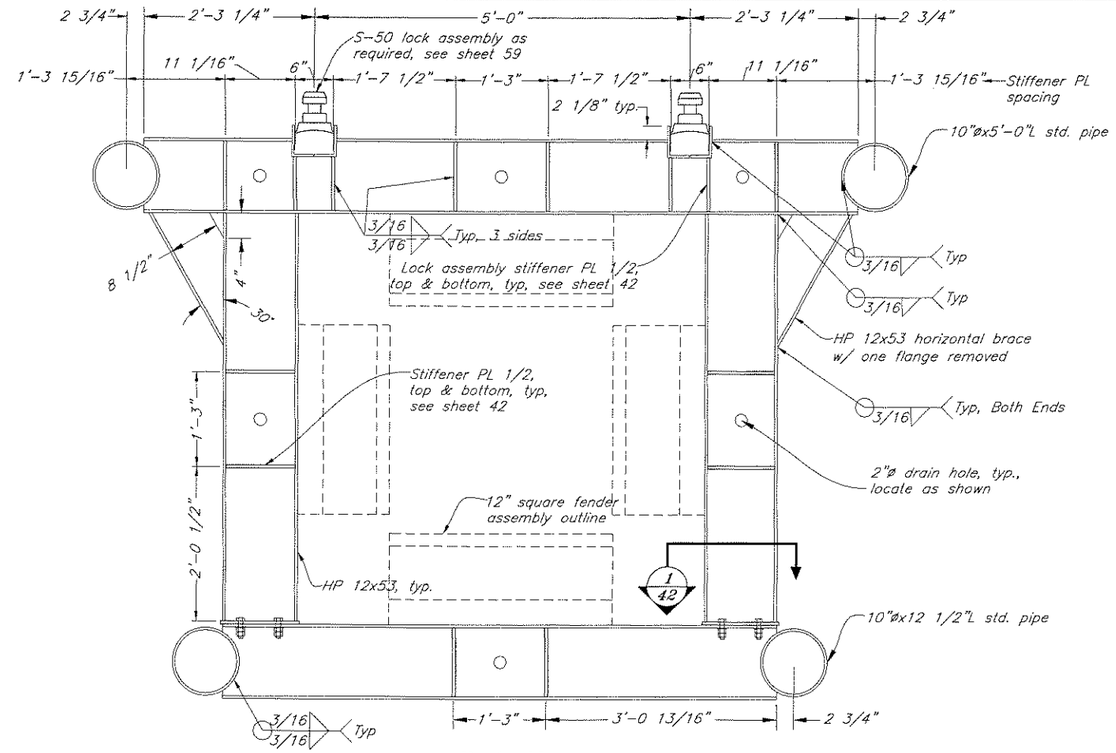

Detail
Upper Wale

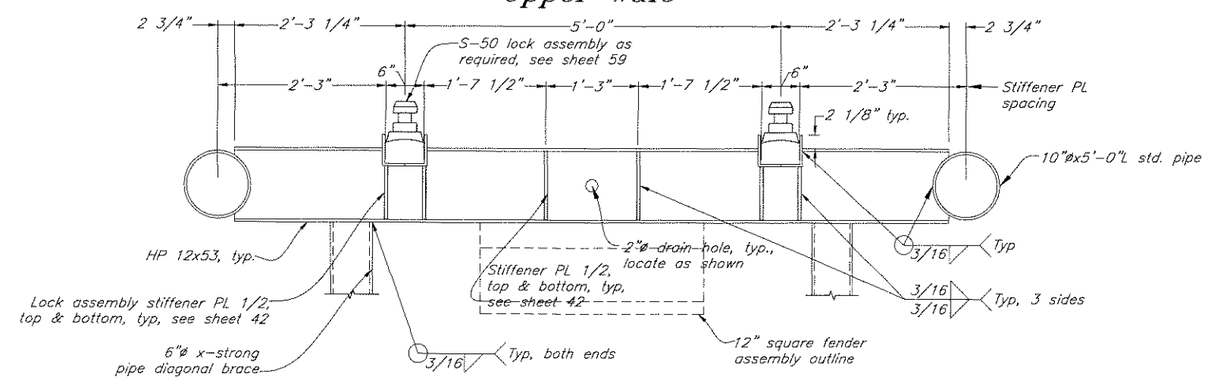

Detail
Lower Wale

DO NOT SCALE FROM THESE DRAWINGS USE DIMENSIONS

DESIGNED BY: D. Lowell

STATE OF ALASKA 49th Kirk D. Miller CE-8550 REGISTERED PROFESSIONAL ENGINEER 3/17/10

CHECKED BY: T. Daggett

DRAFTED BY: D. Lowell

STATE OF ALASKA
DEPARTMENT OF TRANSPORTATION
& PUBLIC FACILITIES
S.E. REGION DESIGN & ENGINEERING SERVICES DIVISION

Angoon Ferry Terminal Improvements, Re-Bid

Float Restraint Collars

PATH: Q:\Ang\68502\MF\Planset\41 Float Restaint Collars.dwg
PLOT: PSPACE 1=1 Tab: Float Restraint Collars Fri, 12/Mar/10 11:50AM

REVISIONS NO.	DATE	DESCRIPTION	PROJECT DESIGNATION	YEAR	SHEET NO.	TOTAL SHEETS
			68502	2010	41	72

Notes:

1. HP 12x53 wale not shown

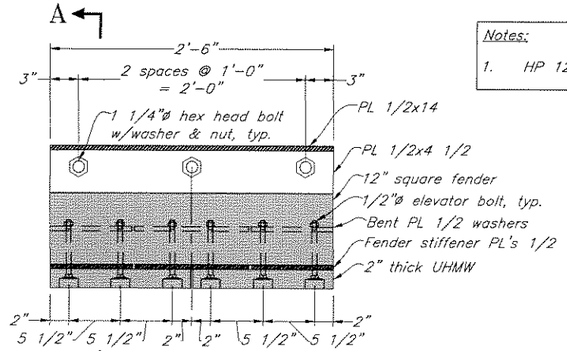

2'-6" Length

(Total 8 req'd)

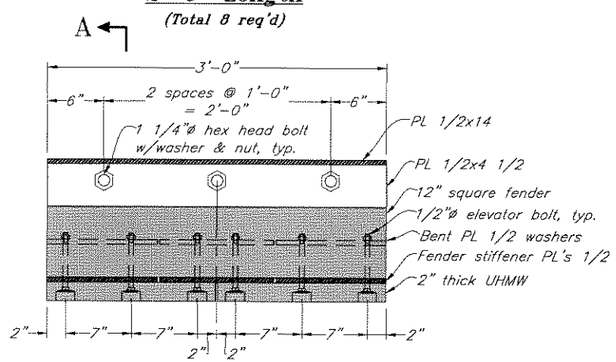

3'-0" Length

(12 req'd)

12" Square Fender Assembly Plan

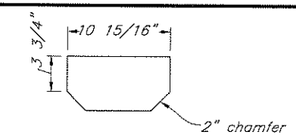

Stiffener PL 1/2

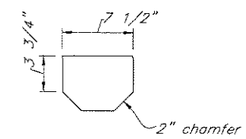

Lock Assembly Stiffener PL 1/2

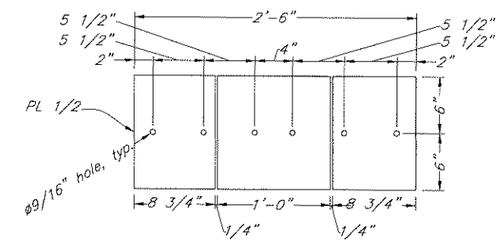

2'-6" Length

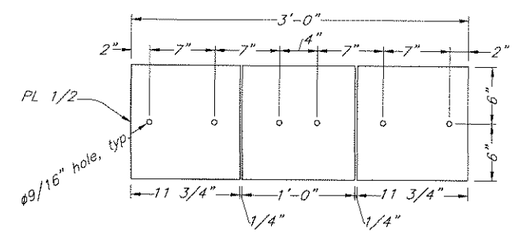

3'-0" Length

Fender Stiffener PL's 1/2

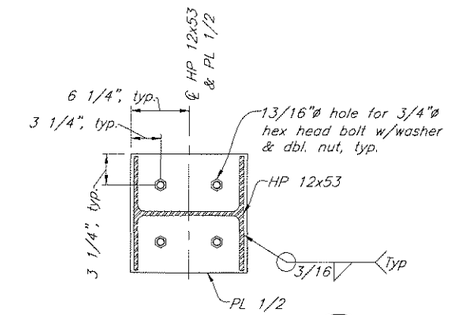

Detail 1 / 41

Connection PL 1/2

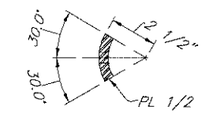

Elevation B-B

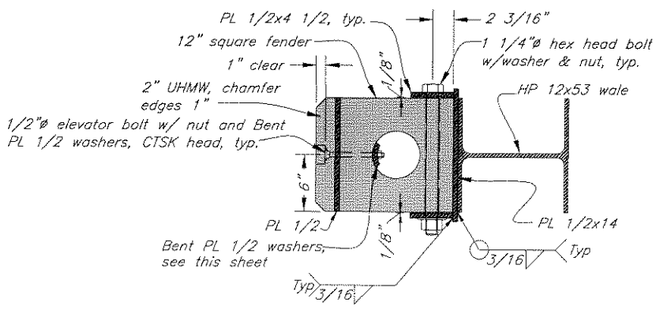

Section A-A

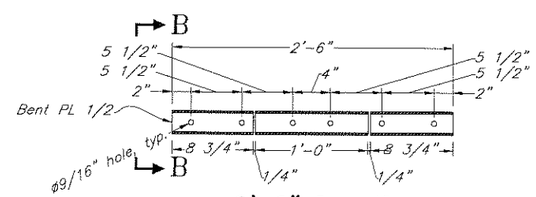

2'-6" Length

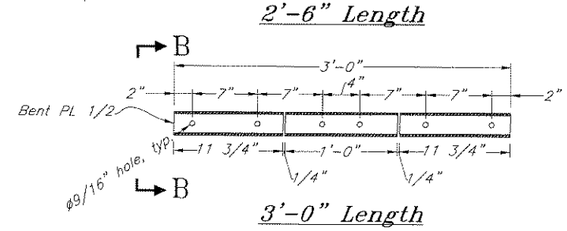

3'-0" Length

Bent PL 1/2 Washers

DO NOT SCALE FROM THESE DRAWINGS USE DIMENSIONS

DESIGNED BY: D. Lowell

STATE OF ALASKA 49th Kirk D. Miller CE-8550 REGISTERED PROFESSIONAL ENGINEER 3/12/10

CHECKED BY: T. Doggett

DRAFTED BY: D. Lowell/C. Furman

STATE OF ALASKA
DEPARTMENT OF TRANSPORTATION
& PUBLIC FACILITIES
S.E. REGION DESIGN & ENGINEERING SERVICES DIVISION

Angoon Ferry Terminal Improvements, Re-Bid

Float Restraint Collar Details

PATH: Q:\Ang\68502\MF\Planset\42 Float Restaint Collar Details.dwg

PLOT: PSPACE 1=1 Tab:Float Restraint Collar Details 1 Fri, 12/Mar/10 11:50AM

REVISIONS			PROJECT DESIGNATION	YEAR	SHEET NO.	TOTAL SHEETS
NO.	DATE	DESCRIPTION	68502	2010	42	72

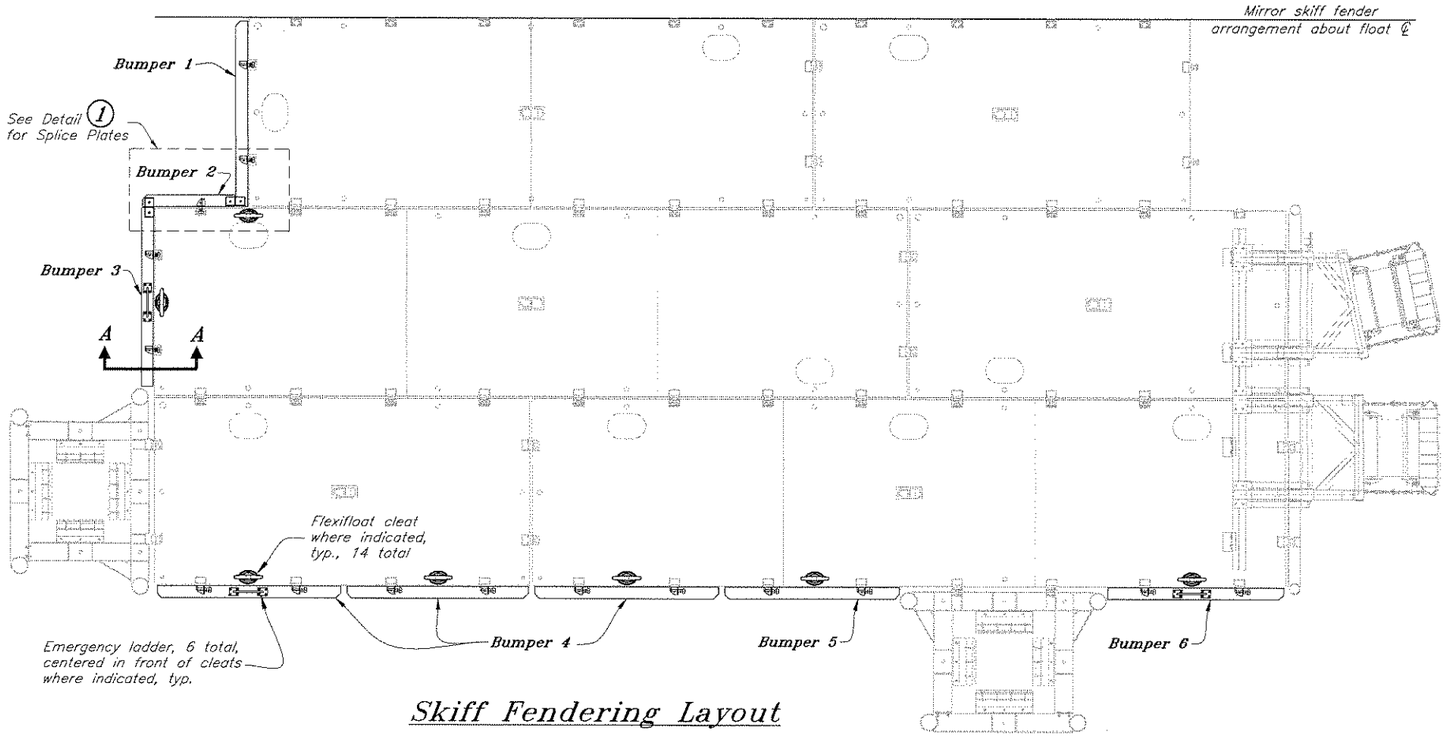

Skiff Fendering Layout

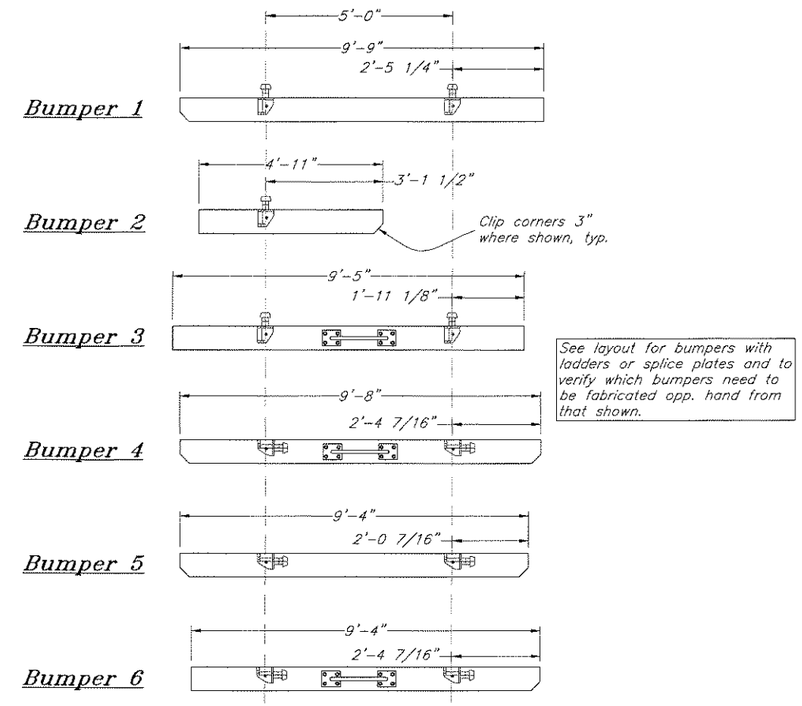

8x8 Treated Timber Bumper Assemblies

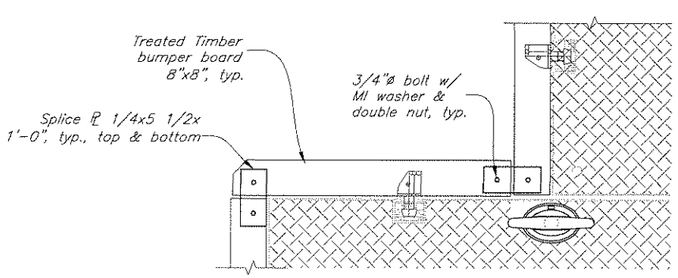

Detail Fender Board Splice Plates 1

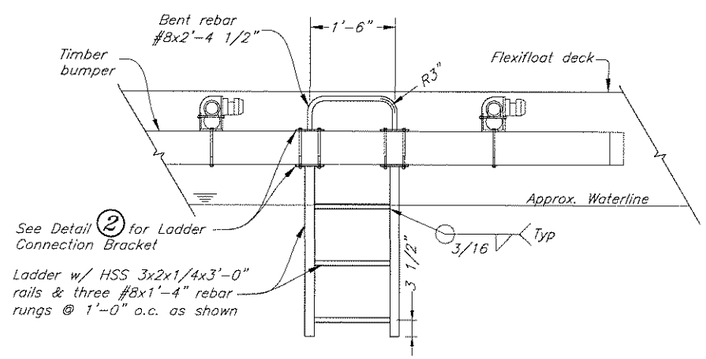

Typical Elevation Emergency Ladder

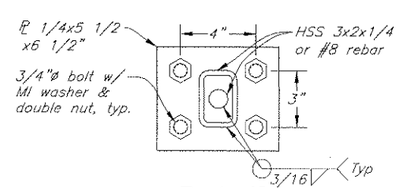

Detail Ladder Connection Bracket 2

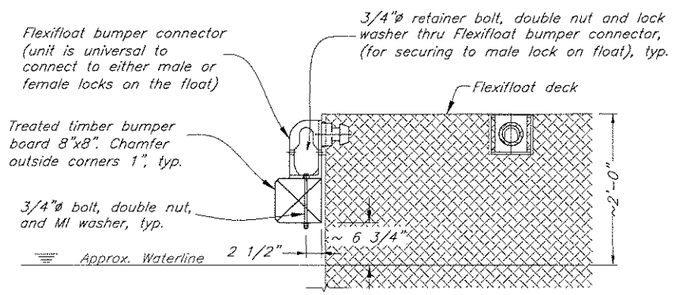

Section A–A

DO NOT SCALE FROM THESE DRAWINGS USE DIMENSIONS

DESIGNED BY: J. Osburn

STATE OF ALASKA
DEPARTMENT OF TRANSPORTATION
& PUBLIC FACILITIES
S.E. REGION DESIGN & ENGINEERING SERVICES DIVISION

Angoon Ferry Terminal
Improvements, Re-Bid

Skiff Fenders

STATE OF ALASKA 49th Kirk B. Miller CE-8550 REGISTERED PROFESSIONAL ENGINEER
3/17/10

CHECKED BY: K. Miller
DRAFTED BY: Staff

PATH: O:\Ang\68502\MF\Planset\43 Skiff Fenders.dwg
PLOT: PSPACE 1=1 Tab: Skiff Fenders Fri, 12/Mar/10 11:51AM

REVISIONS			PROJECT DESIGNATION	YEAR	SHEET NO.	TOTAL SHEETS
NO.	DATE	DESCRIPTION				
			68502	2010	43	72

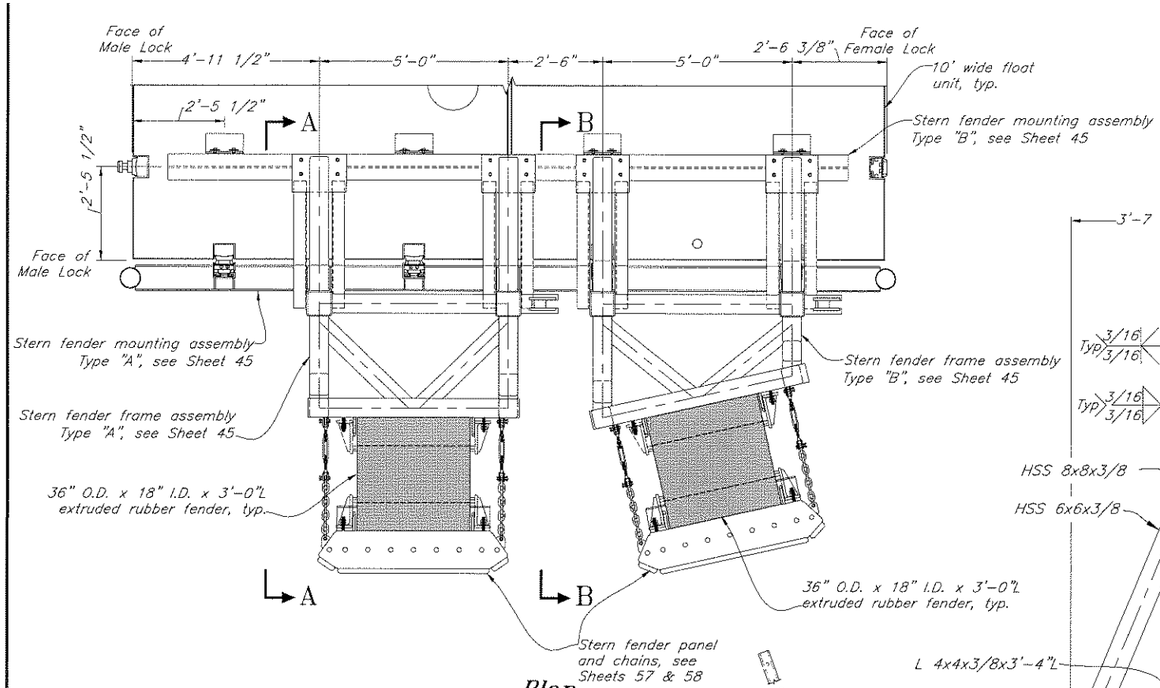

Plan

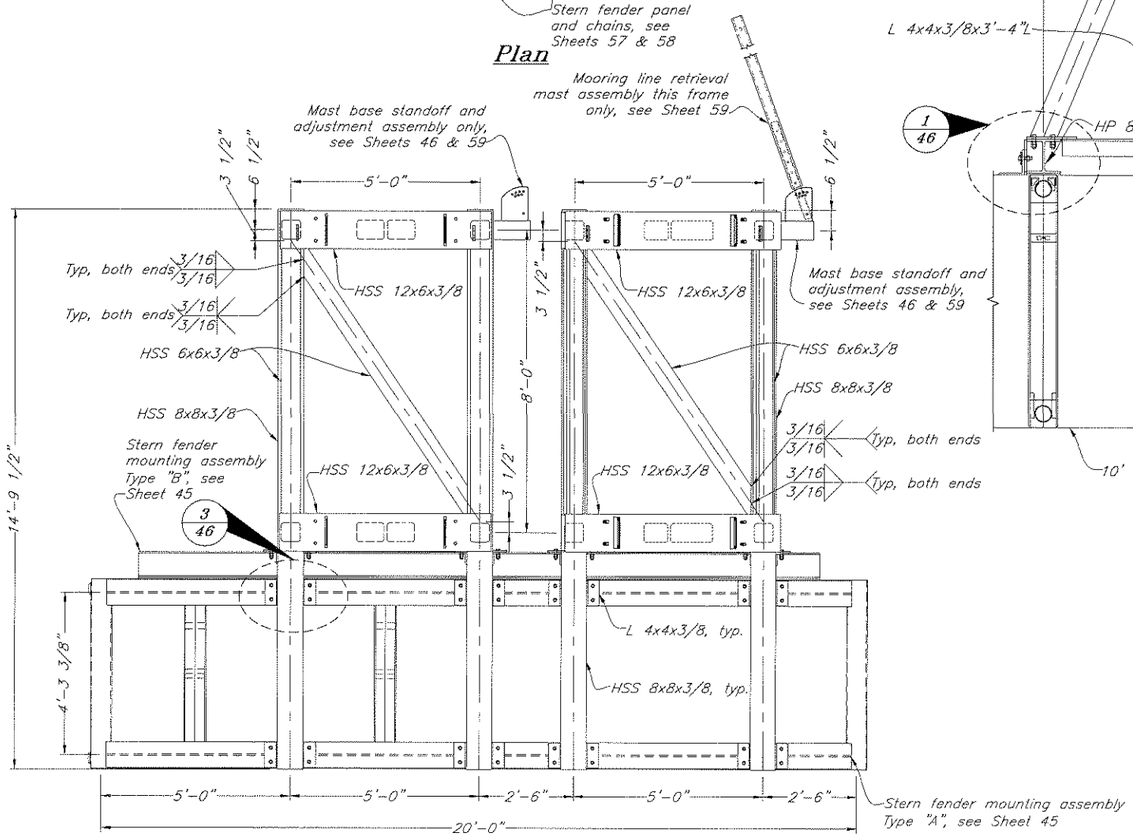

Elevation

*Fender panel not shown for clarity

Stern Fender Assembly

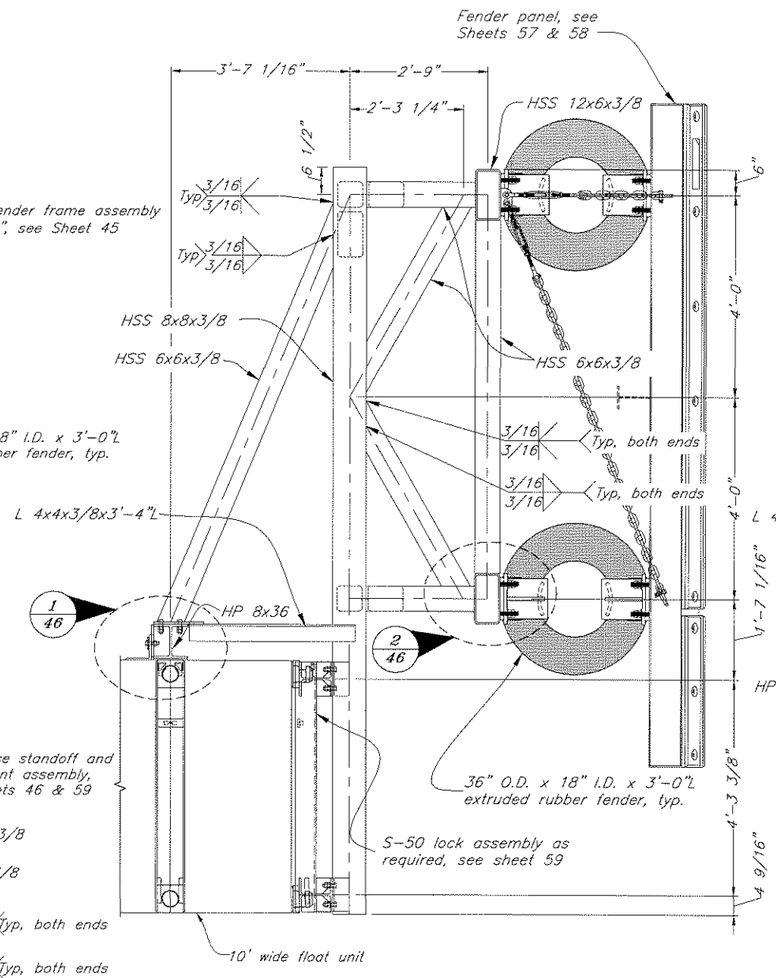

Elevation A-A

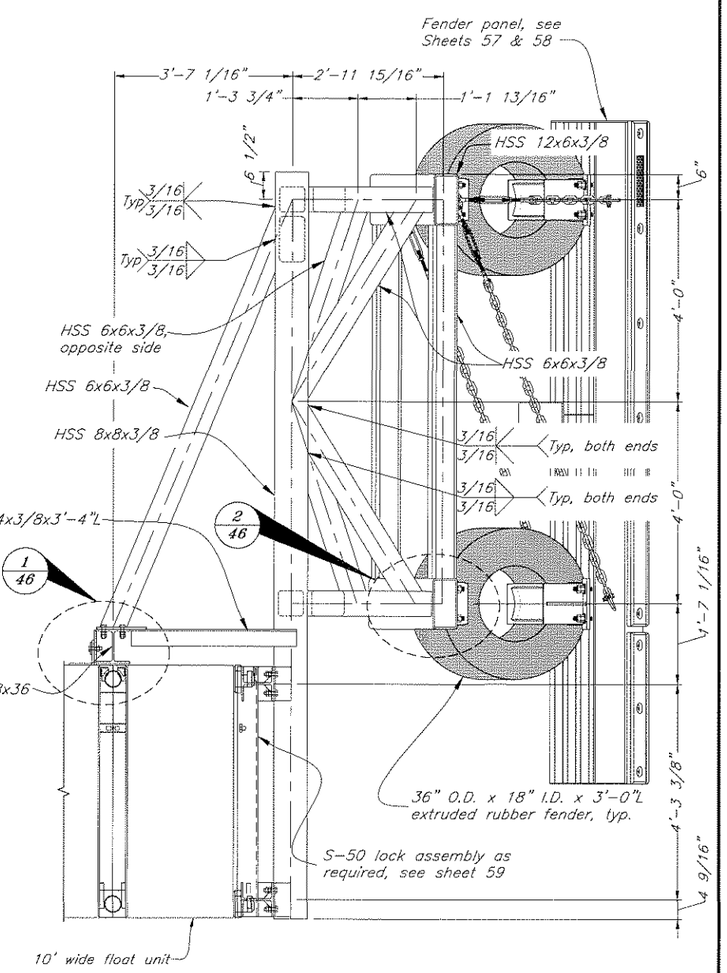

Elevation B-B

DO NOT SCALE FROM THESE DRAWINGS USE DIMENSIONS

DESIGNED BY: D. Lowell

STATE OF ALASKA 49th Kirk D. Miller CE-8550 REGISTERED PROFESSIONAL ENGINEER 4/27/10

CHECKED BY: K. Miller

DRAFTED BY: D. Lowell/C. Fumon

STATE OF ALASKA
DEPARTMENT OF TRANSPORTATION
& PUBLIC FACILITIES
S.E. REGION DESIGN & ENGINEERING SERVICES DIVISION

Angoon Ferry Terminal Improvements, Re-Bid

Float Stern Fender Assembly

PATH: O:\Ang\68502\MF\Planset\44-46 Float Stern Fenders.dwg
PLOT: PSPACE 1=1 Tab: 44 Tue, 20/Apr/10 11:22AM

REVISIONS			PROJECT DESIGNATION	YEAR	SHEET NO.	TOTAL SHEETS
NO.	DATE	DESCRIPTION	68502	2010	44	72

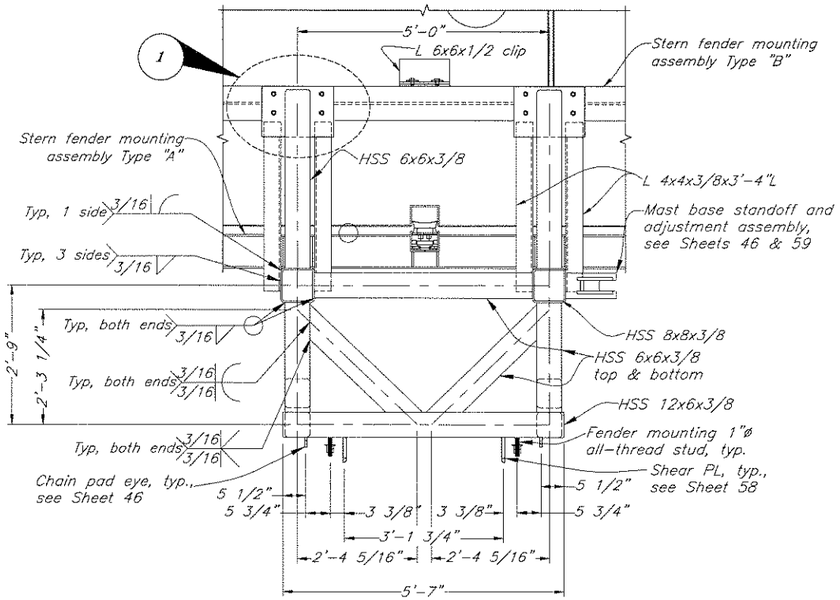

Plan
Stern Fender Frame Assembly Type "A"

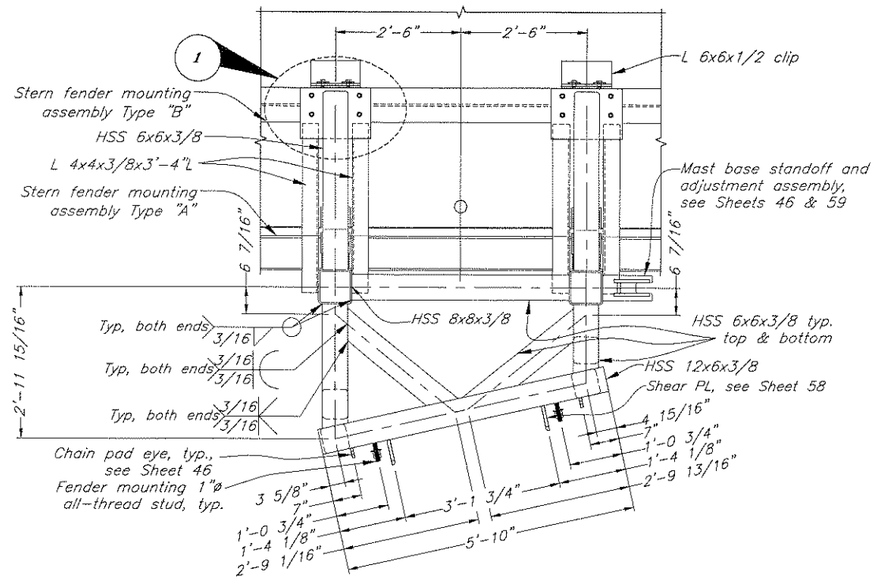

Plan
Stern Fender Frame Assembly Type "B"

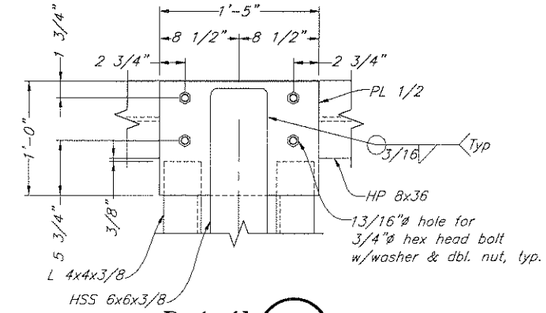

Detail 1

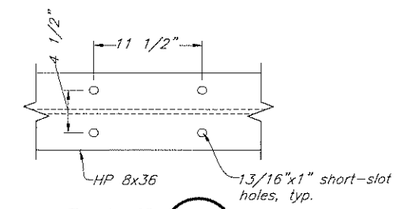

Detail 2

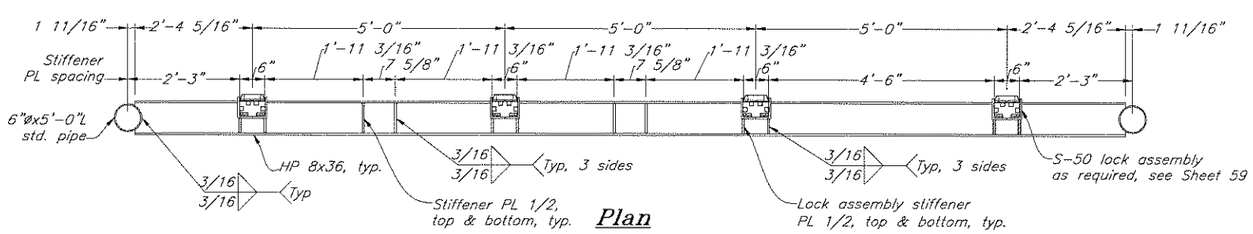

Plan

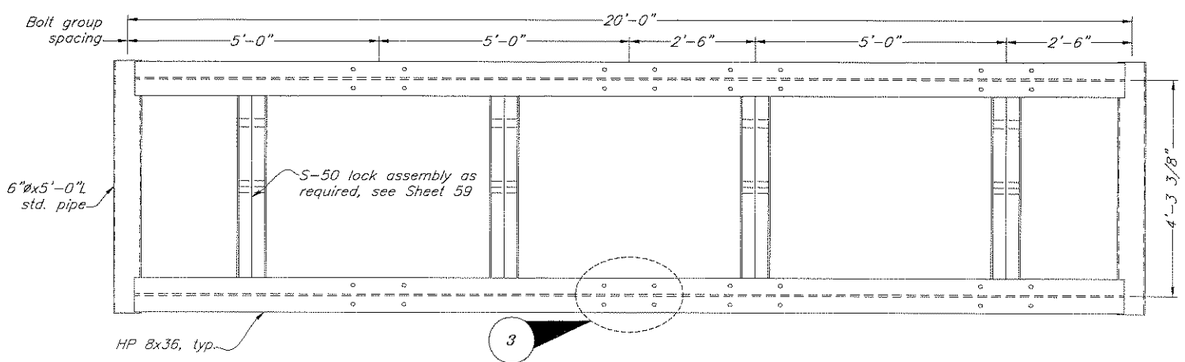

Elevation
Fender Mounting Assembly Type "A"

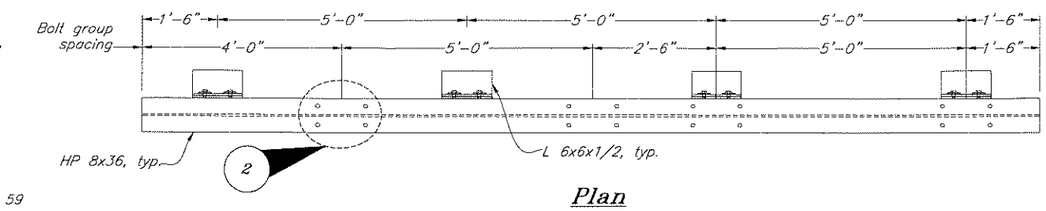

Plan

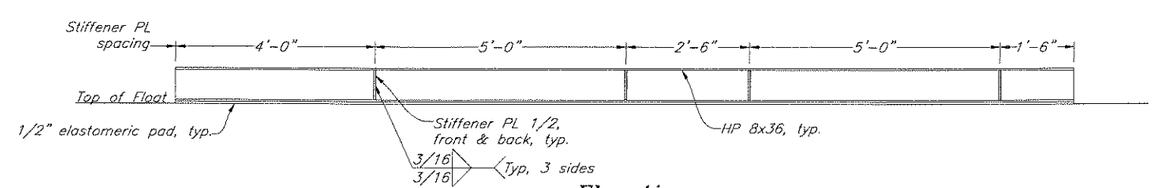

Elevation
Fender Mounting Assembly Type "B"

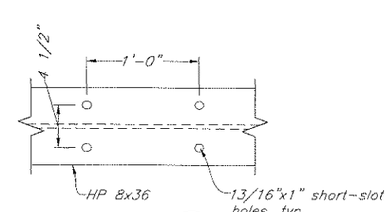

Detail 3

DO NOT SCALE FROM THESE DRAWINGS USE DIMENSIONS

DESIGNED BY: D. Lowell

STATE OF ALASKA
Kirk D. Miller
CE-8550
49th
REGISTERED PROFESSIONAL ENGINEER

3/12/10

CHECKED BY: K. Miller
DRAFTED BY: D. Lowell/C. Furman

STATE OF ALASKA
DEPARTMENT OF TRANSPORTATION & PUBLIC FACILITIES
S.E. REGION DESIGN & ENGINEERING SERVICES DIVISION

Angoon Ferry Terminal Improvements, Re-Bid

Float Stern Fender Assembly Details I

PATH: G:\Ang\68502\MF\Planset\44-46 Float Stern Fenders.dwg
PLOT: PSPACE 1=1 Tab: 45 Fri, 12/Mar/10 11:59AM

REVISIONS			PROJECT DESIGNATION	YEAR	SHEET NO.	TOTAL SHEETS
NO.	DATE	DESCRIPTION	68502	2010	45	72

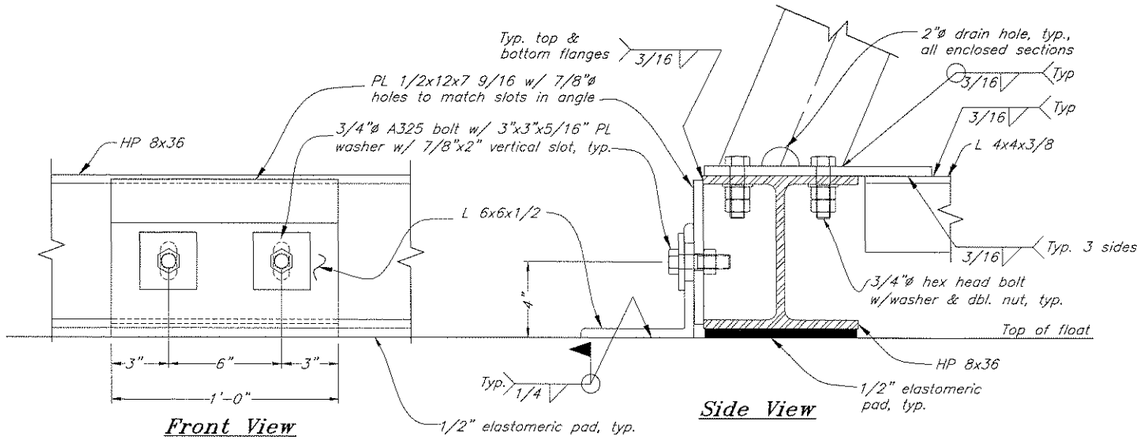

Detail 1/44

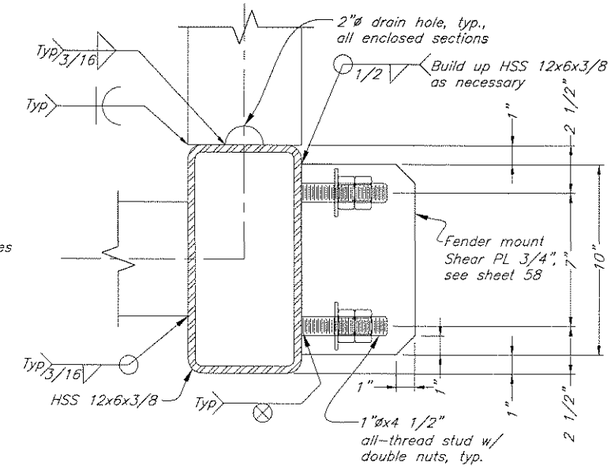

Detail 2/44

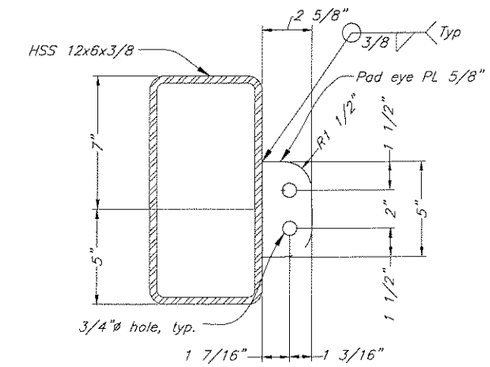

Chain Pad Eye

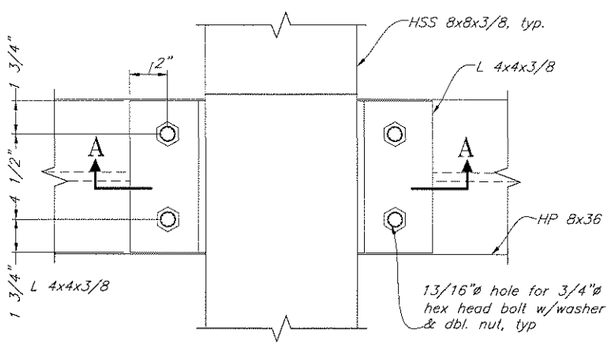

Detail 3/44

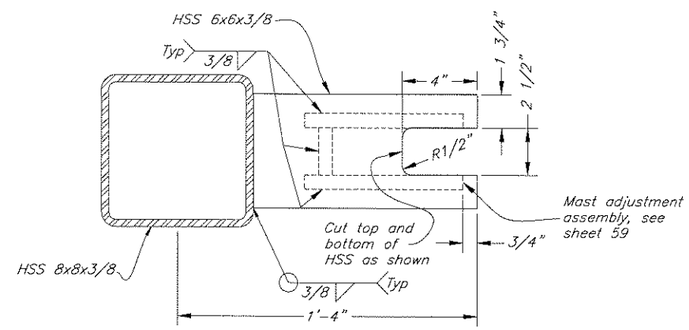

Plan
Mast Base Standoff

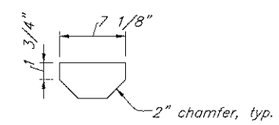

Stiffener PL 1/2

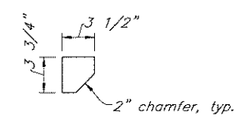

Lock Assembly Stiffener PL 1/2

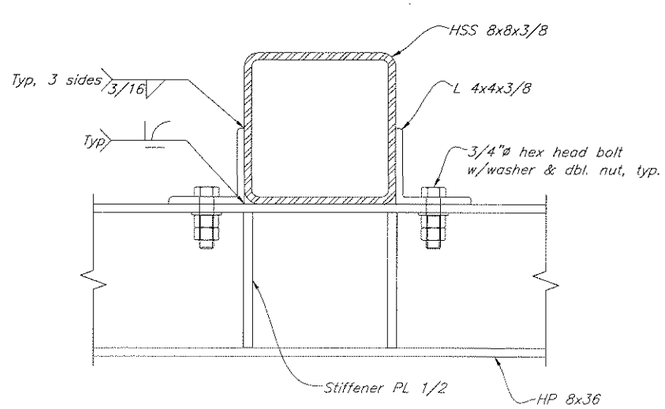

Section A-A

Notes:

1. 2"ø drain hole required at all enclosed sections, as shown on above details.

DO NOT SCALE FROM THESE DRAWINGS USE DIMENSIONS

DESIGNED BY: D. Lowell

STATE OF ALASKA 49th Kirk D. Miller CE-6550 REGISTERED PROFESSIONAL ENGINEER

3/12/10

CHECKED BY: K. Miller

DRAFTED BY: D. Lowell/C. Fuman

STATE OF ALASKA
DEPARTMENT OF TRANSPORTATION
& PUBLIC FACILITIES
S.E. REGION DESIGN & ENGINEERING SERVICES DIVISION

Angoon Ferry Terminal Improvements, Re-Bid

Float Stern Fender Assembly Details II

PATH: Q:\Ang\68502\MF\Planset\44-46 Float Stern Fenders.dwg
PLOT: PSPACE 1=1 Tab: 46 Fri, 12/Mar/10 11:59AM

REVISIONS NO.	DATE	DESCRIPTION	PROJECT DESIGNATION	YEAR	SHEET NO.	TOTAL SHEETS
			68502	2010	46	72

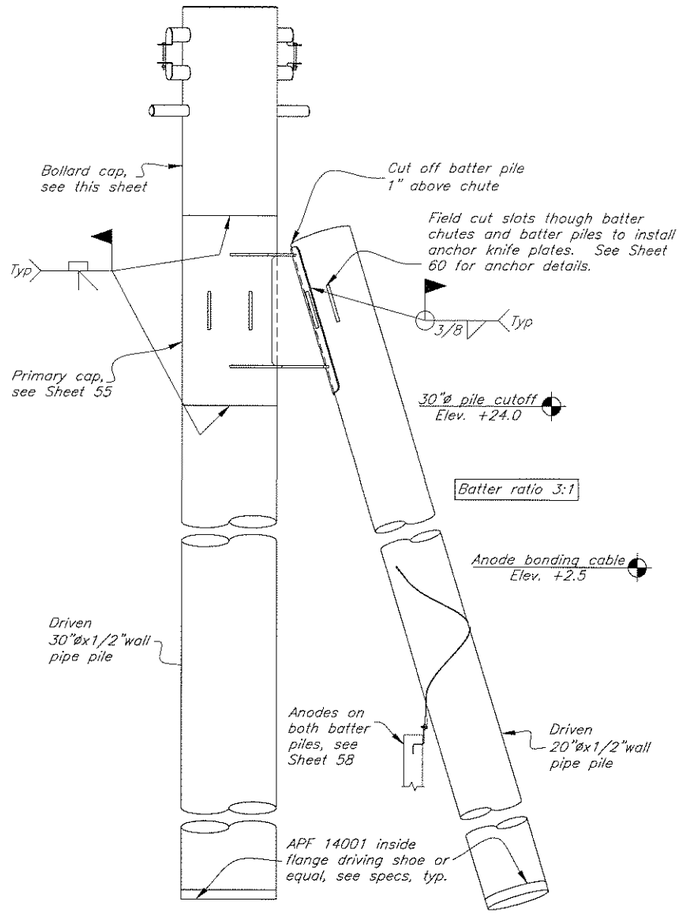

Side Elevation
Structures N2 & S2

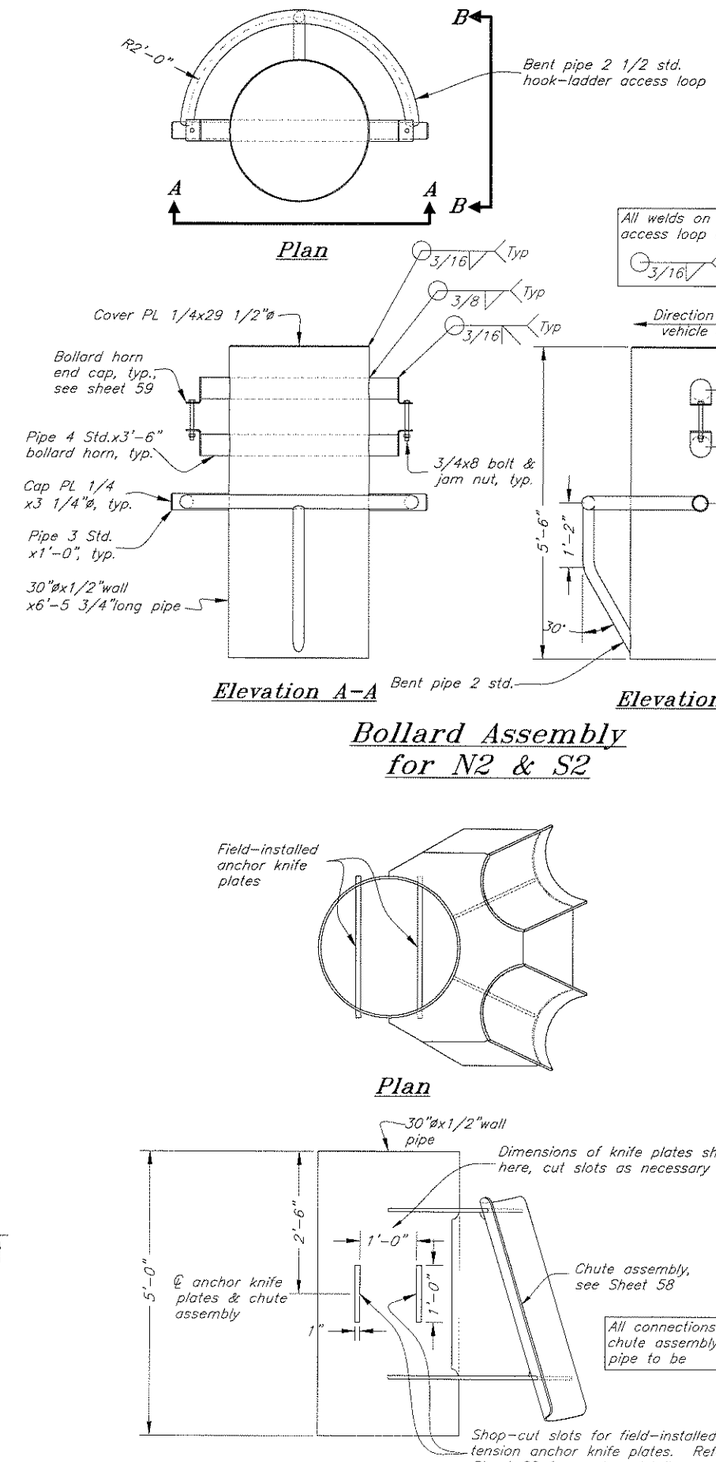

Bollard Assembly
for N2 & S2

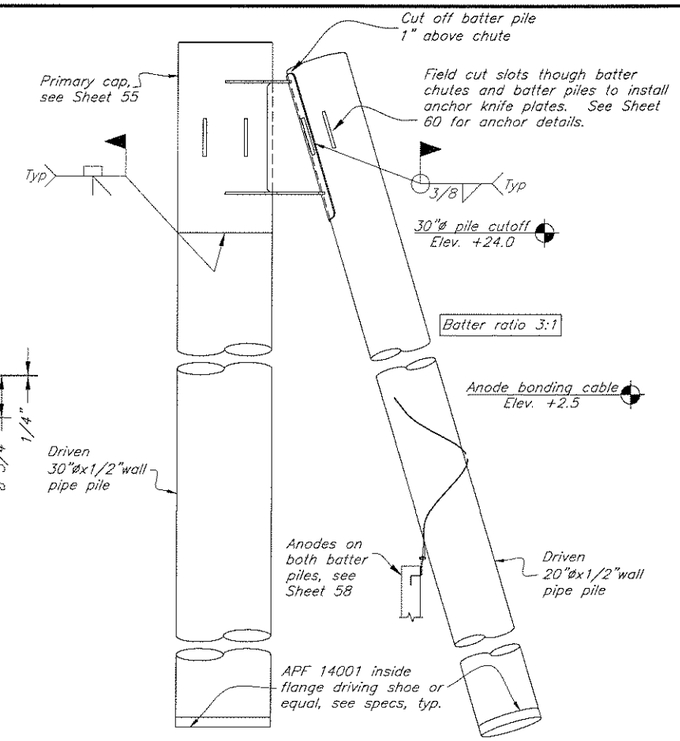

Side Elevation
Structures N1 & S1

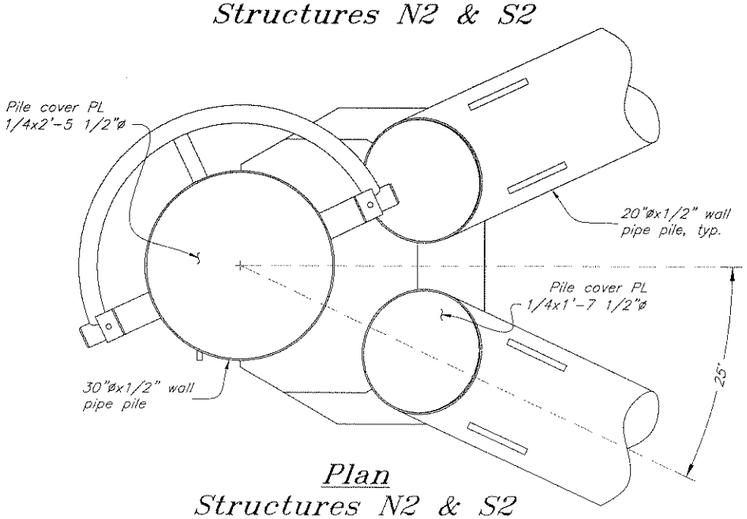

Plan
Structures N2 & S2
(S2 shown, N2 mirror image for bollard orientation)

Plan

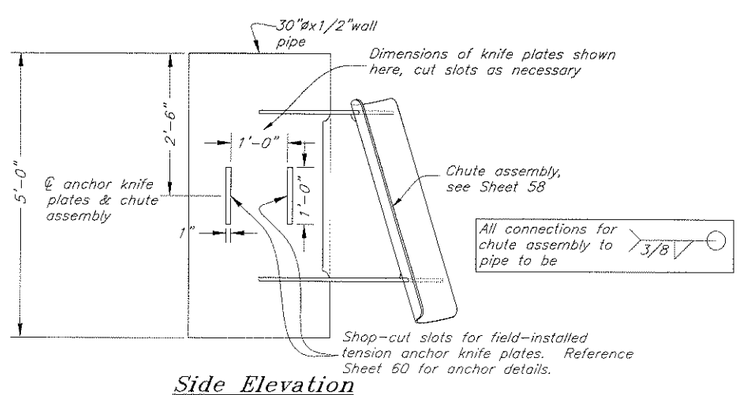

Side Elevation
Primary Cap

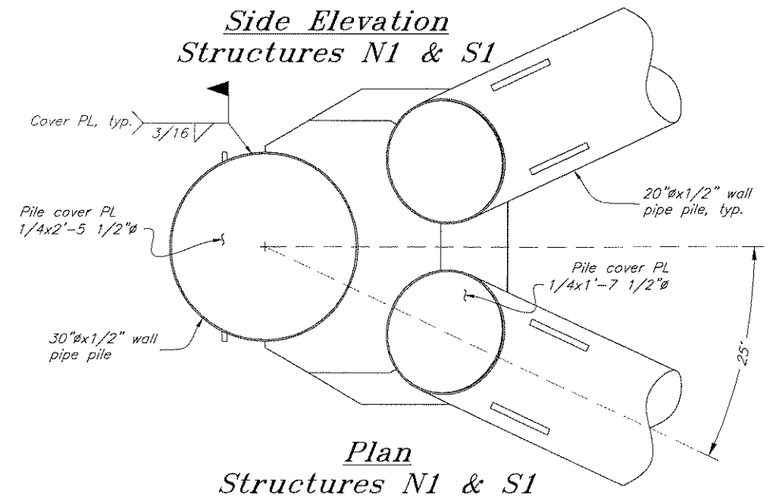

Plan
Structures N1 & S1

DO NOT SCALE FROM THESE DRAWINGS USE DIMENSIONS

DESIGNED BY: Stoff
CHECKED BY: K. Miller
DRAFTED BY: M. Walters

STATE OF ALASKA
Kirk D. Miller
CE-8556
REGISTERED PROFESSIONAL ENGINEER
3/17/10

STATE OF ALASKA
DEPARTMENT OF TRANSPORTATION
& PUBLIC FACILITIES
S.E. REGION DESIGN & ENGINEERING SERVICES DIVISION

Angoon Ferry Terminal
Improvements, Re-Bid

Float Restraint Dolphins
N1, N2, S1, & S2

PATH: Q:\Ang\68502\MF\Planset\47 N1-2 & S1-2.dwg
PLOT: PSPACE 1=1 Tab: N1 2 & S1 2 Fri, 12/Mar/10 12:00PM

REVISIONS			PROJECT DESIGNATION	YEAR	SHEET NO.	TOTAL SHEETS
NO.	DATE	DESCRIPTION	68502	2010	47	72

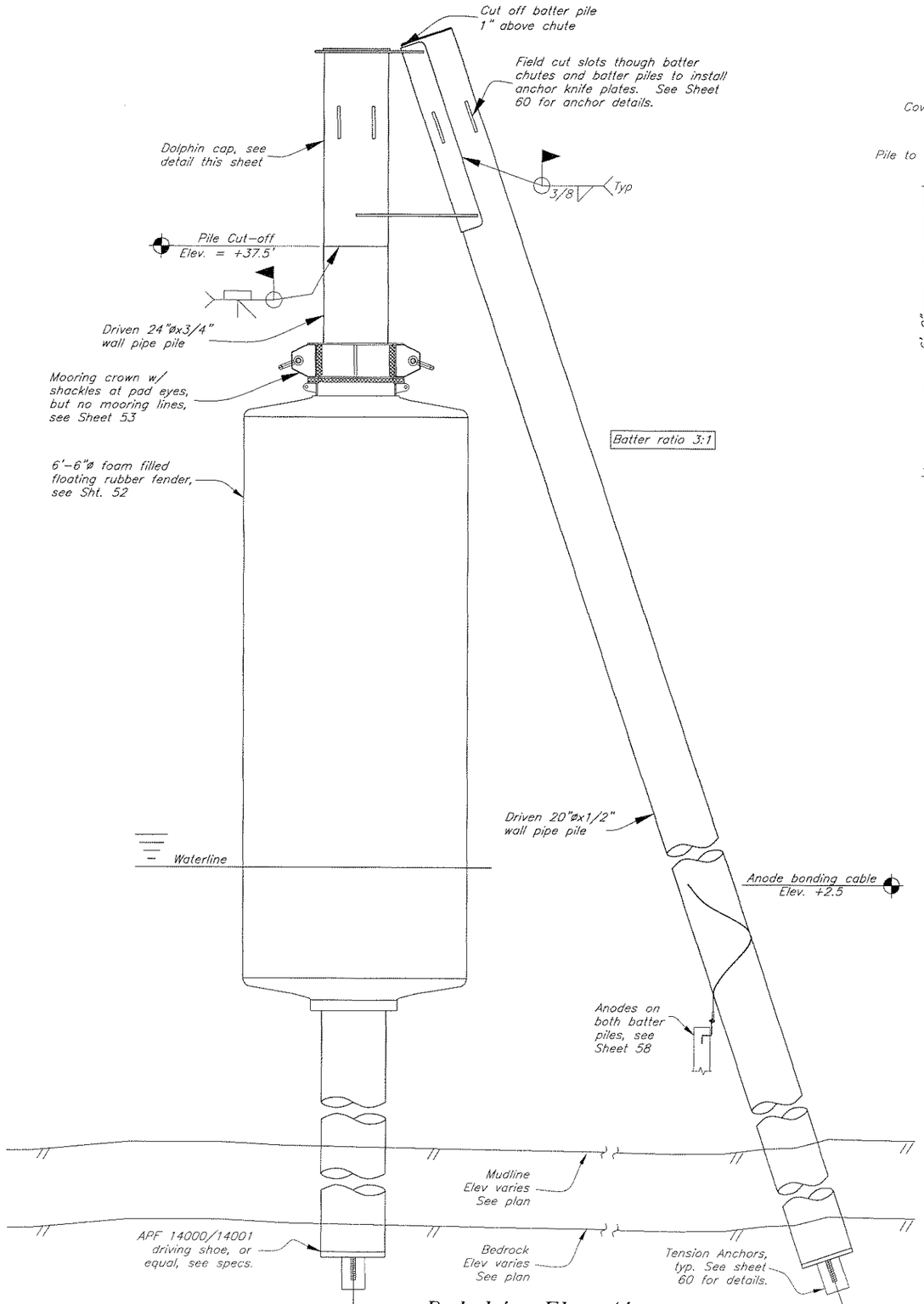

Dolphin Elevation

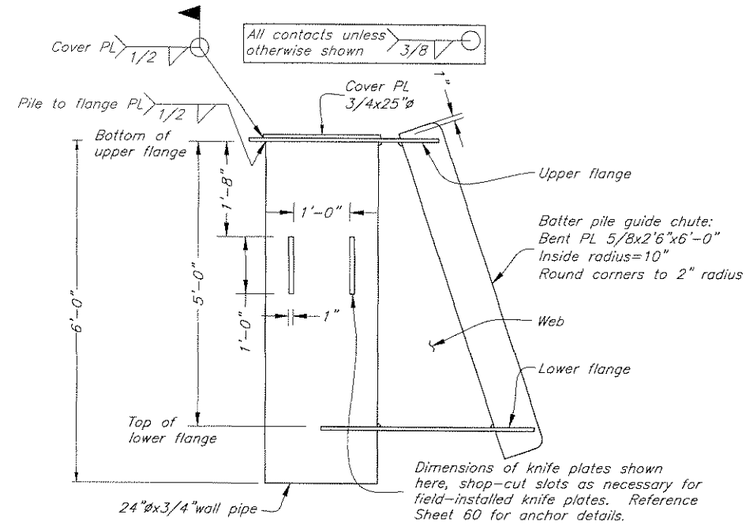

Elevation A-A
Dolphin Cap

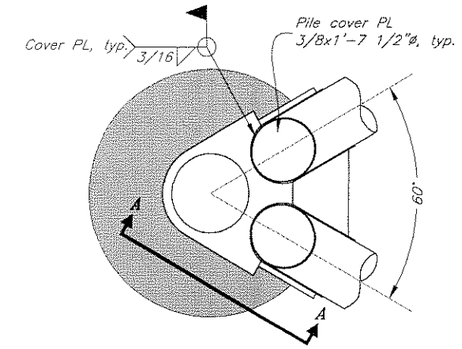

Dolphin Plan

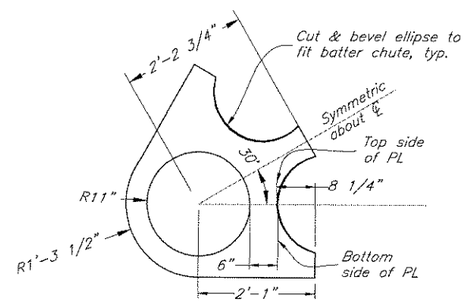

Upper Flange PL 3/4

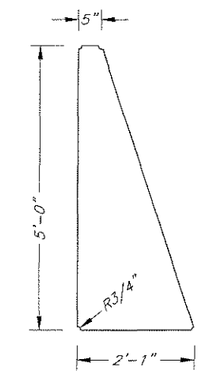

Web PL 5/8

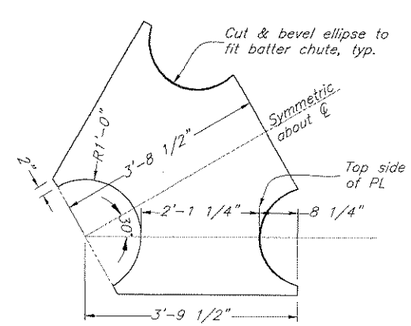

Lower Flange PL 3/4

DO NOT SCALE FROM THESE DRAWINGS USE DIMENSIONS

DESIGNED BY: K. Miller

STATE OF ALASKA 49th Kirk J. Miller CE-8550 REGISTERED PROFESSIONAL ENGINEER

3/12/10

CHECKED BY: T. Doggett

DRAFTED BY: Staff

STATE OF ALASKA
DEPARTMENT OF TRANSPORTATION
& PUBLIC FACILITIES
S.E. REGION DESIGN & ENGINEERING SERVICES DIVISION

Angoon Ferry Terminal
Improvements, Re-Bid

Floating Fender
Dolphin S3

PATH: Q:\Ang\68502\MF\Flansel\48 S3.dwg
PLOT: PSPACE 1=1 Tab: S3 (2) TAB: DETAIL Fri, 12/Mar/10 12:00PM

REVISIONS			PROJECT DESIGNATION	YEAR	SHEET NO.	TOTAL SHEETS
NO.	DATE	DESCRIPTION	68502	2010	48	72

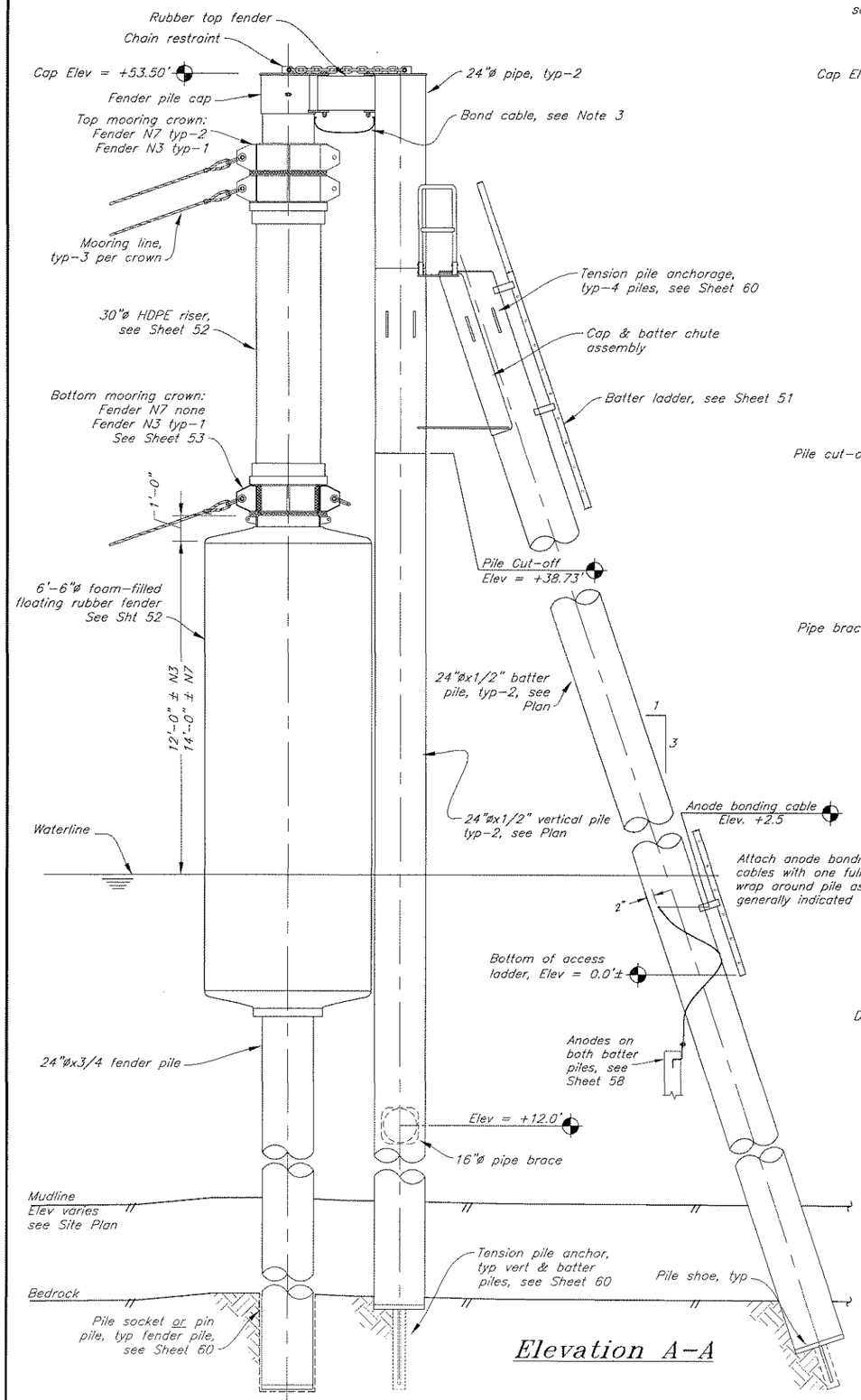

Elevation A-A

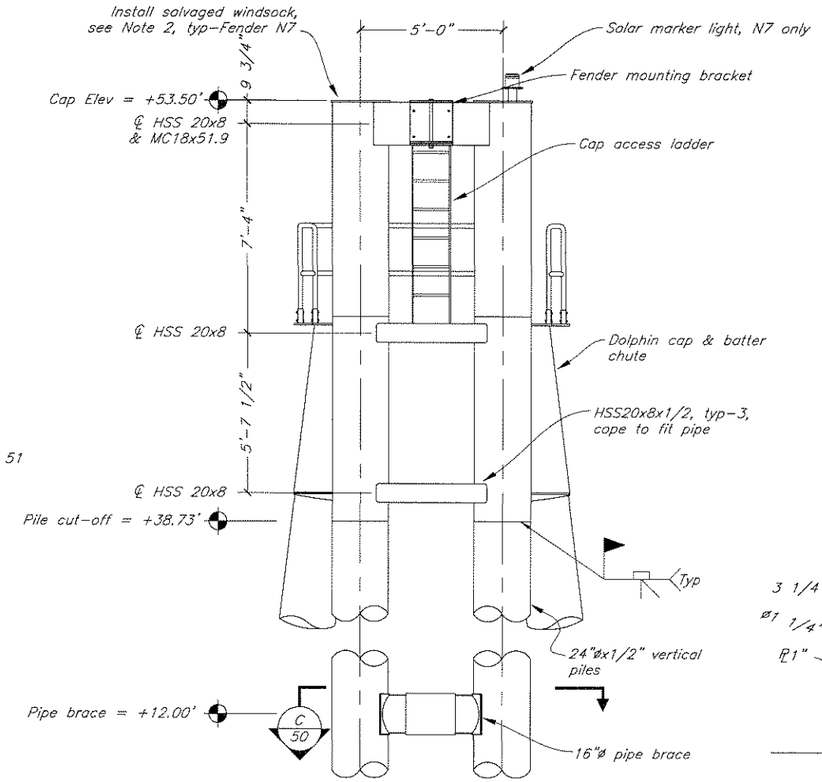

Elevation B-B

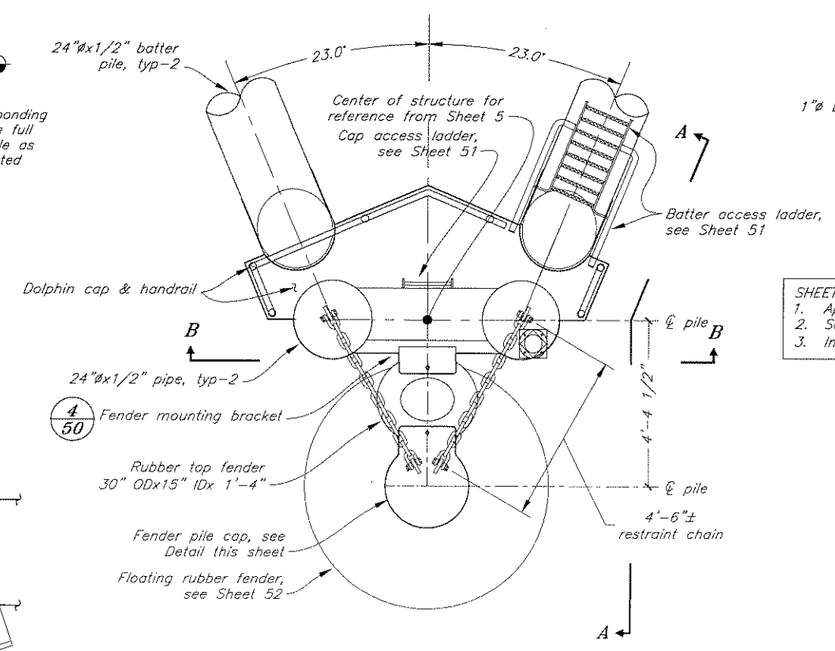

Plan

Note: Shackles & padeyes not shown for clarity

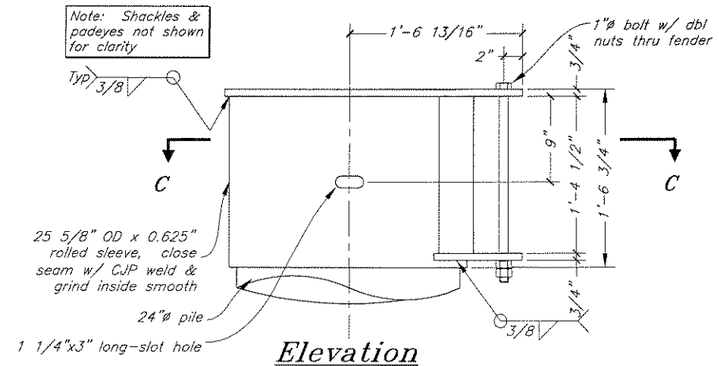

Elevation

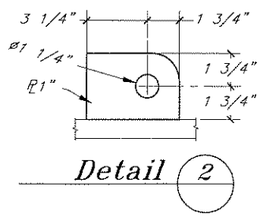

Detail 2

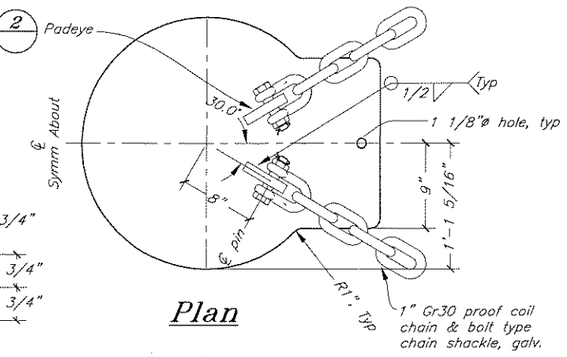

Plan

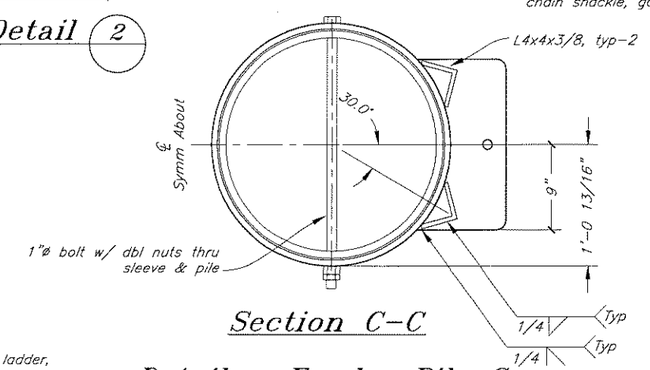

Section C-C

Detail - Fender Pile Cap

SHEET NOTES:
1. Apply non-skid coating System 7A to top PL of dolphin cap
2. Salvage windsock from old dolphin & remount atop Fender N7
3. Install lugs and 1/4"øx4'-6" bonding cable between fender pile and dolphin cap.

DO NOT SCALE FROM THESE DRAWINGS USE DIMENSIONS

DESIGNED BY: K. Miller
CHECKED BY: T. Doggett
DRAFTED BY: Staff

STATE OF ALASKA 49th Kirk D. Miller CE-8550 REGISTERED PROFESSIONAL ENGINEER
3/1/10

STATE OF ALASKA
DEPARTMENT OF TRANSPORTATION & PUBLIC FACILITIES
S.E. REGION DESIGN & ENGINEERING SERVICES DIVISION

Angoon Ferry Terminal Improvements, Re-Bid

5-Pile Floating Fender Dolphin Plan & Elevation N3 & N7

PATH: Q:\Ang\68502\MF\Planset\49 N3 & N7.dwg
PLOT: PSPACE 1=1
Fri, 12/Mar/10 12:30PM

REVISIONS			PROJECT DESIGNATION	YEAR	SHEET NO.	TOTAL SHEETS
NO.	DATE	DESCRIPTION	68502	2010	49	72

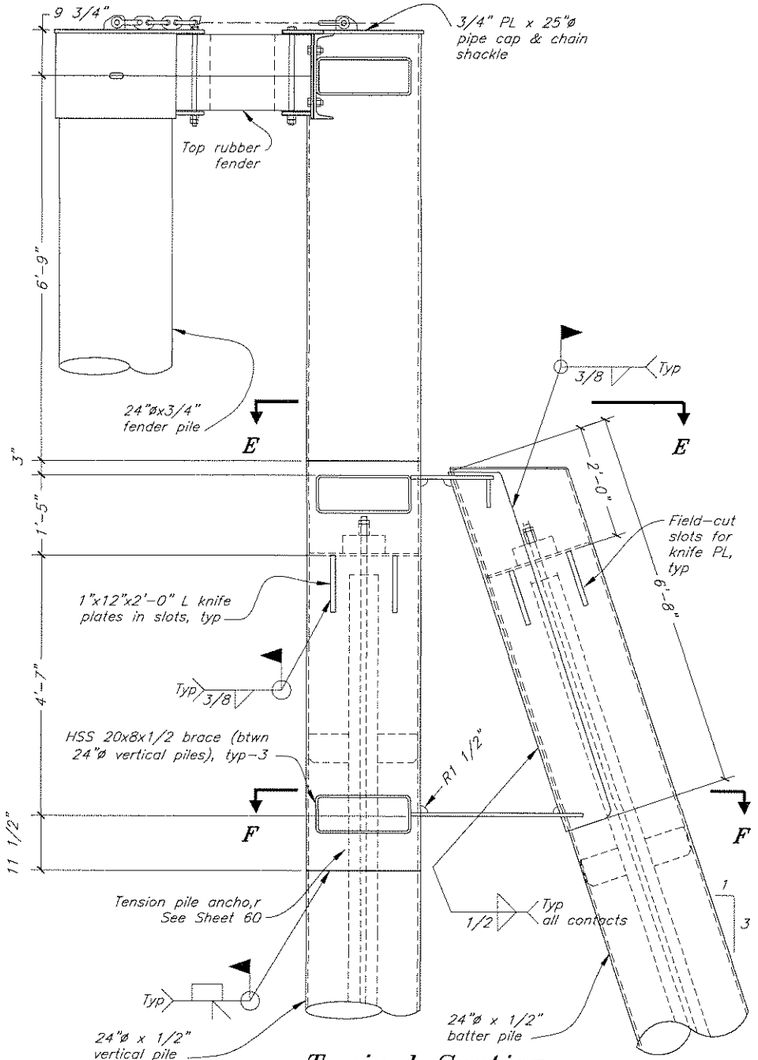

Typical Section
Dolphin Cap

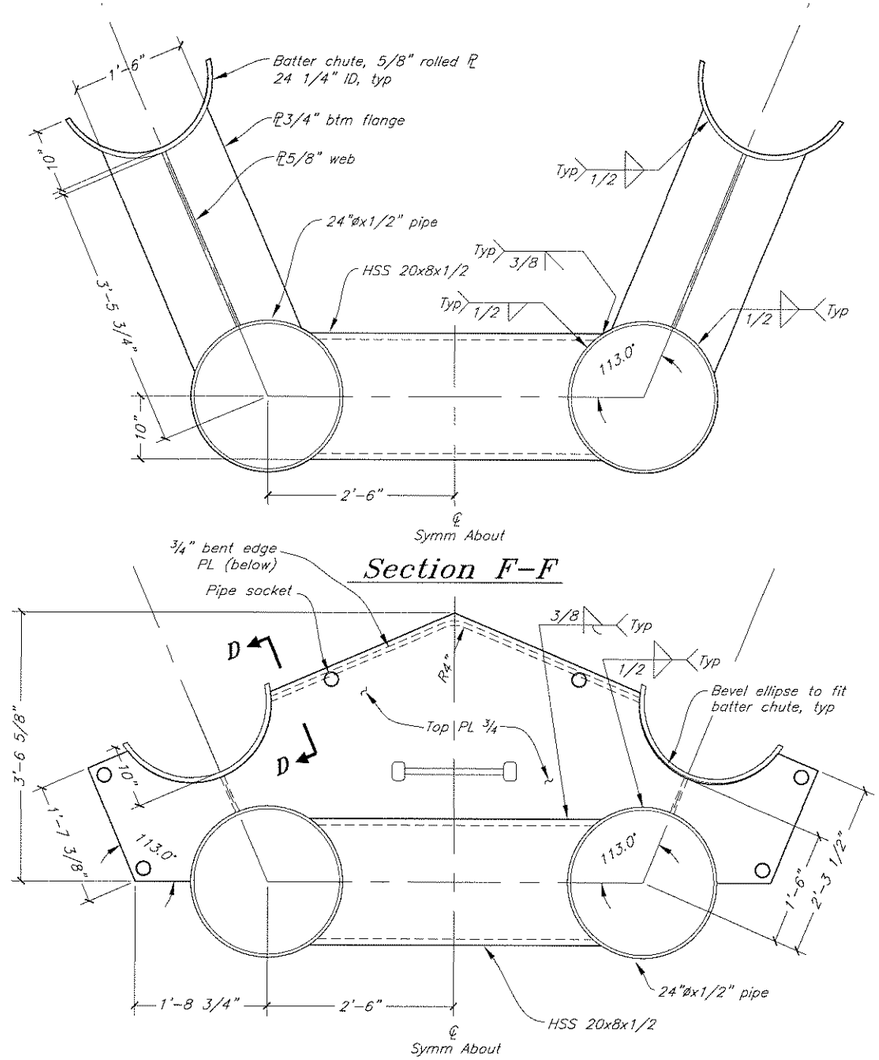

Section E-E

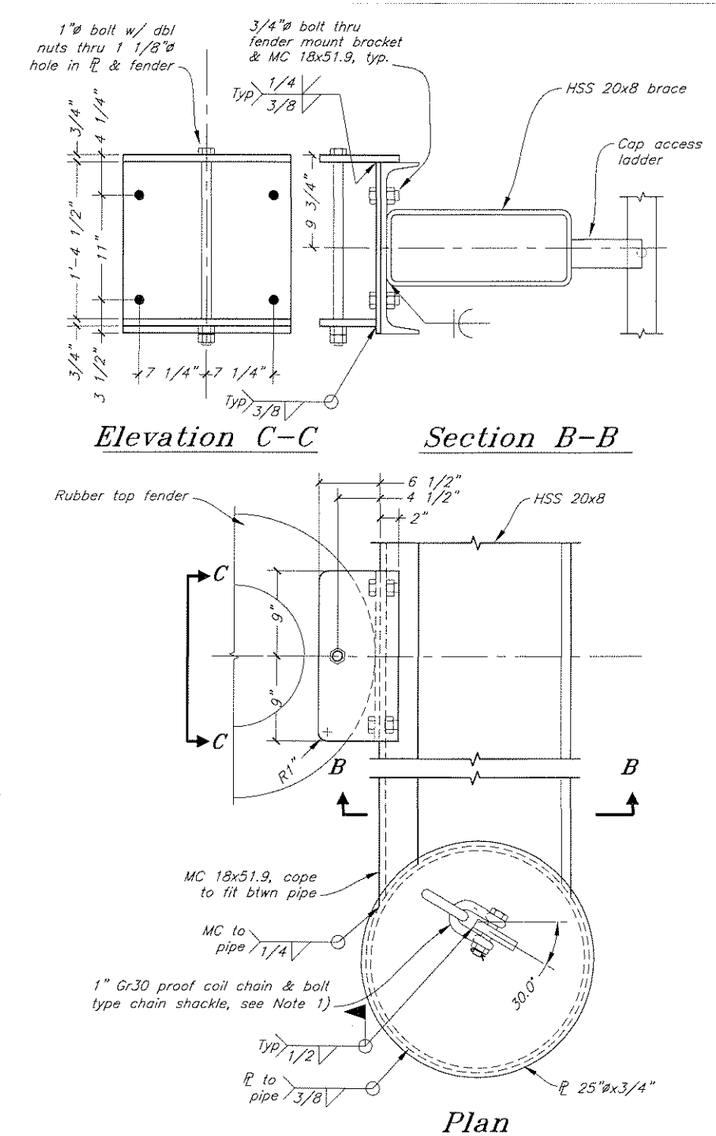

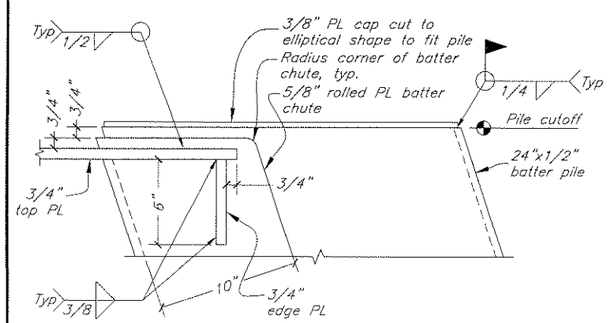

Section D-D

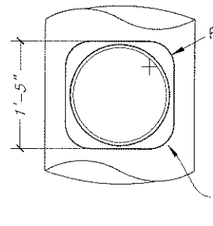

Section A-A

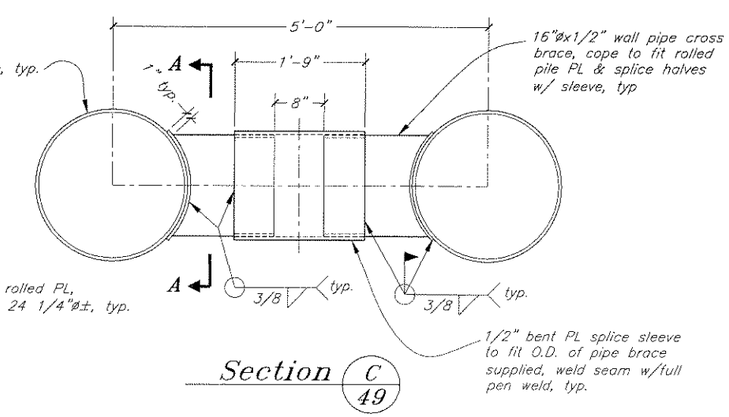

Section C / 49

NOTE:
1. Field adjust padeye to plumb fender pile. Note that top rubber fender will be slightly compressed.

Detail 4 / 49

DO NOT SCALE FROM THESE DRAWINGS USE DIMENSIONS

DESIGNED BY: K. Miller
CHECKED BY: T. Daggett
DRAFTED BY: Staff

STATE OF ALASKA
DEPARTMENT OF TRANSPORTATION
& PUBLIC FACILITIES
S.E. REGION DESIGN & ENGINEERING SERVICES DIVISION

Angoon Ferry Terminal Improvements, Re-Bid

Dolphin Caps N3 & N7

PATH: Q:\Ang\68502\MF\Planset\50 Cap N3 & N7.dwg
PLOT: PSPACE 1=1 Fri, 12/Mar/10 12:30PM

REVISIONS			PROJECT DESIGNATION	YEAR	SHEET NO.	TOTAL SHEETS
NO.	DATE	DESCRIPTION	68502	2010	50	72

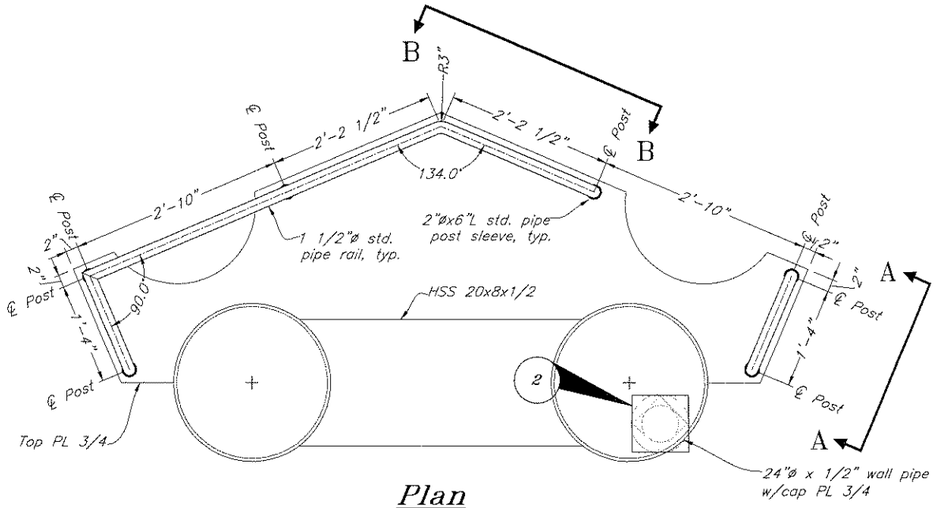

Plan
Dolphin Cap Handrail

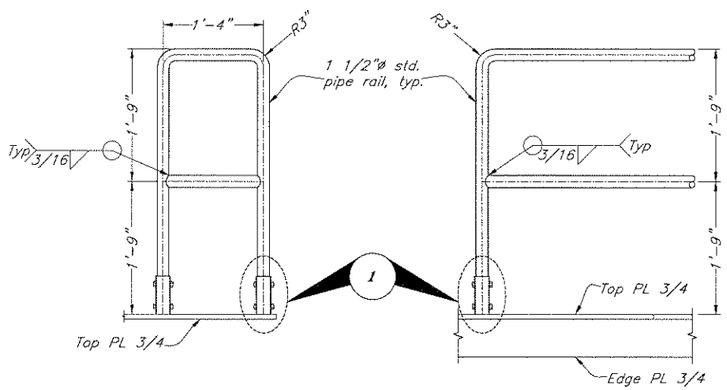

Elevation A–A
Elevation B–B

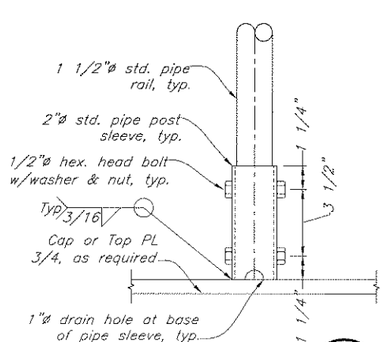

Detail Post Sleeve 1

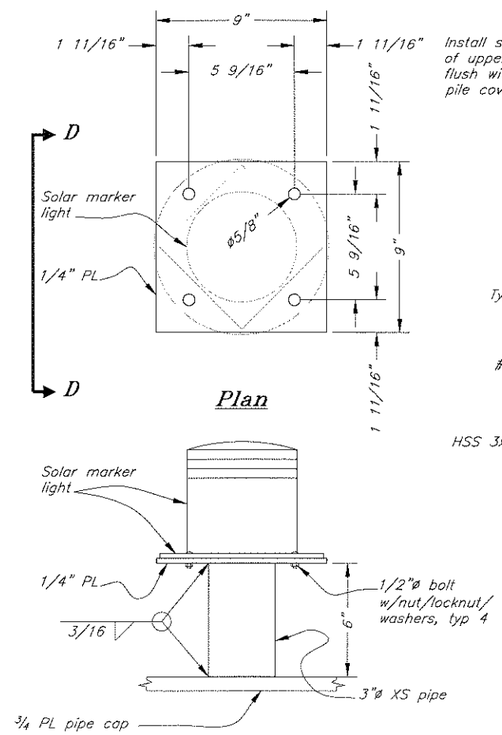

Plan

Elevation D–D

Detail Marker Light 2

Marker Light Notes:
1. Light only required on dolphin N7.
2. Carmanah Model 702-5 light fixture or equal. See specs.
3. Marker light color shall be red.
4. Verify base bolt pattern with manufacturer prior to fabrication of mounting plate.

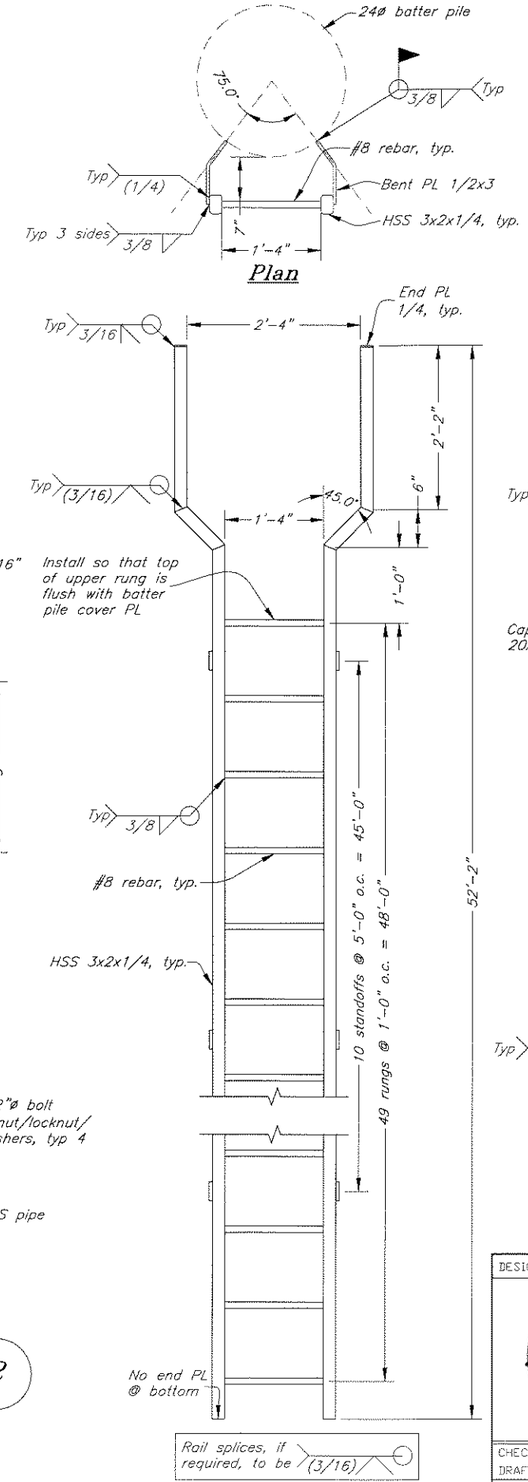

Plan

Front Elevation
Batter Ladder

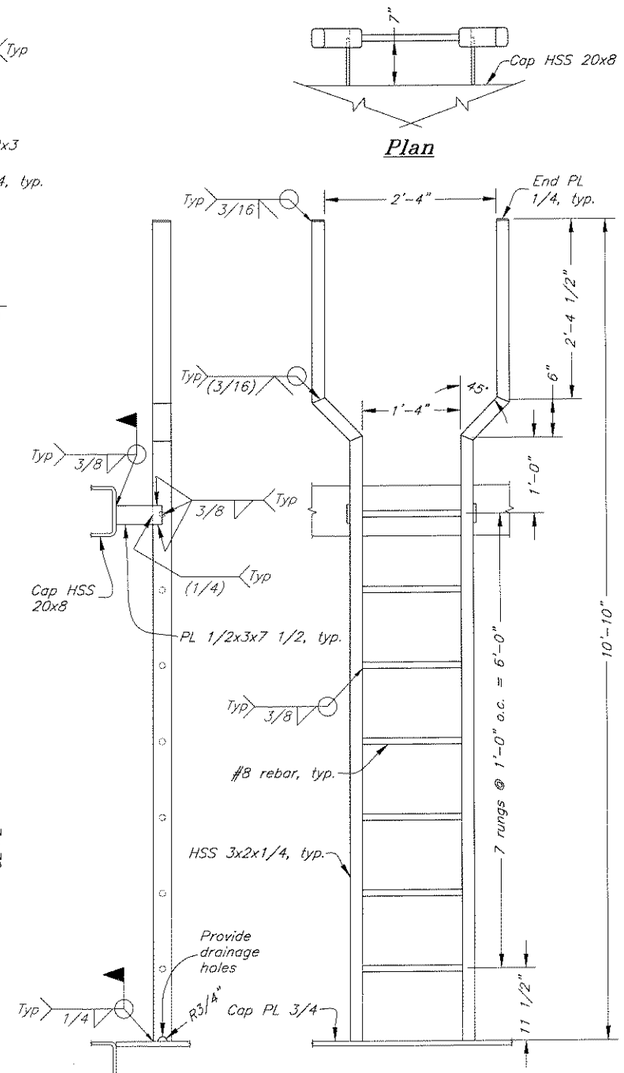

Plan

Side Elevation
Front Elevation
Cap Ladder

DO NOT SCALE FROM THESE DRAWINGS USE DIMENSIONS

DESIGNED BY: K. Miller
CHECKED BY: T. Doggett
DRAFTED BY: Staff

STATE OF ALASKA 49th Kirk D. Miller CE-8550 REGISTERED PROFESSIONAL ENGINEER 3/17/10

STATE OF ALASKA
DEPARTMENT OF TRANSPORTATION
& PUBLIC FACILITIES
S.E. REGION DESIGN & ENGINEERING SERVICES DIVISION

Angoon Ferry Terminal
Improvements, Re-Bid

Floating Fender
Dolphin Rail & Ladder

PATH: Q:\Ang\68502\MF\Planset\51 Rail & Ladder N3 & N7.DWG
PLOT: PSPACE 1=1 Fri, 12/Mar/10 12:31PM

REVISIONS			PROJECT DESIGNATION	YEAR	SHEET NO.	TOTAL SHEETS
NO.	DATE	DESCRIPTION	68502	2010	51	72

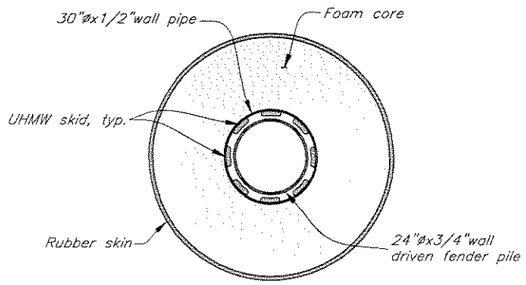

Section A–A
Floating Fender

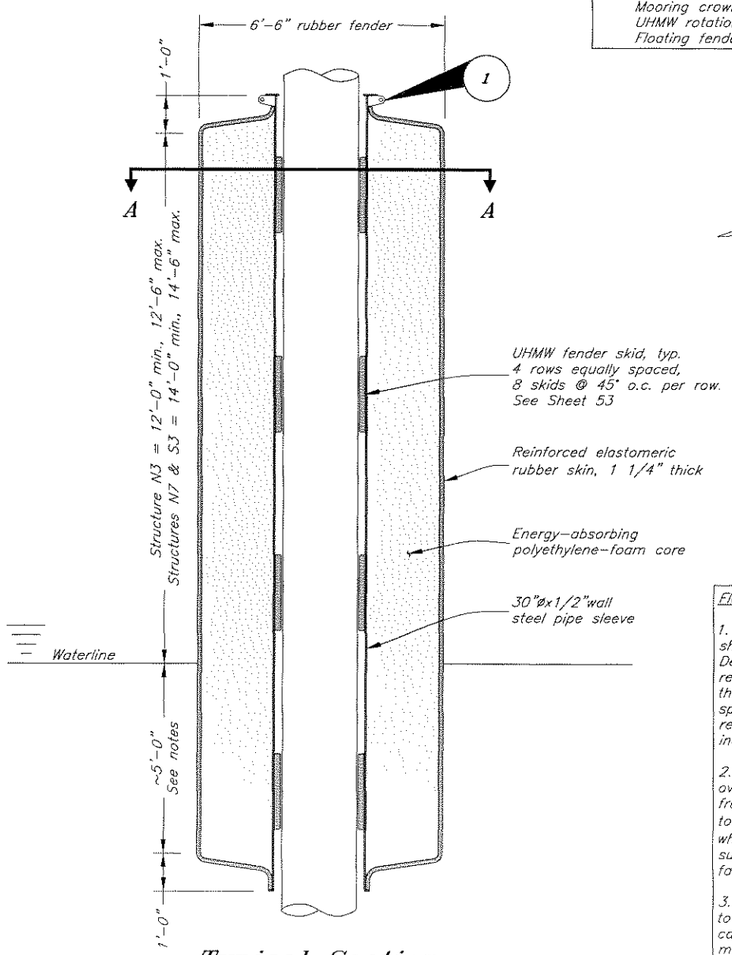

Typical Section
Floating Fender
(3 required)

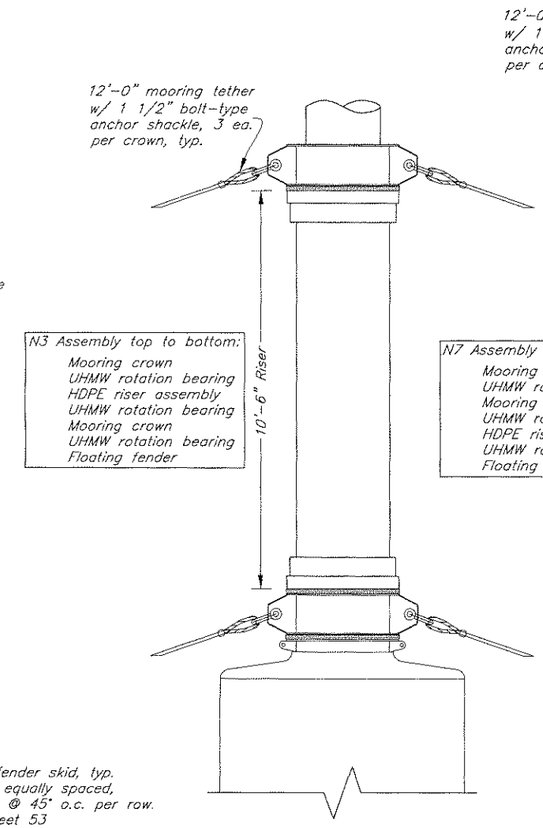

Structure N3

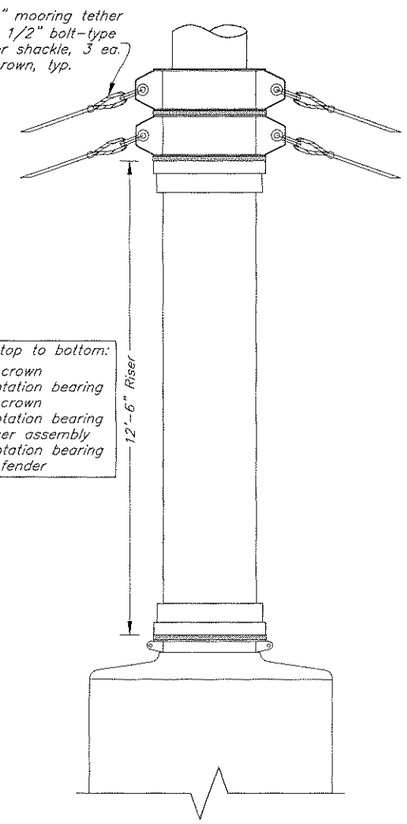

Structure N7

See Sheet 53 for mooring crown assembly details

Elevation
Fender–Riser–Crown Assemblies

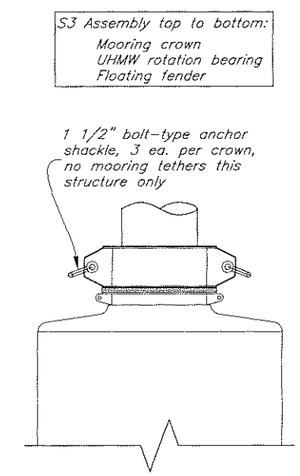

Structure S3

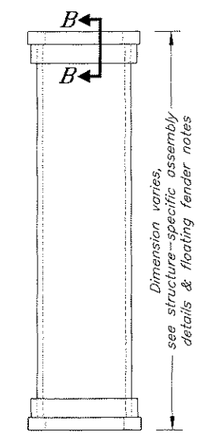

Elevation
HDPE Riser Assembly

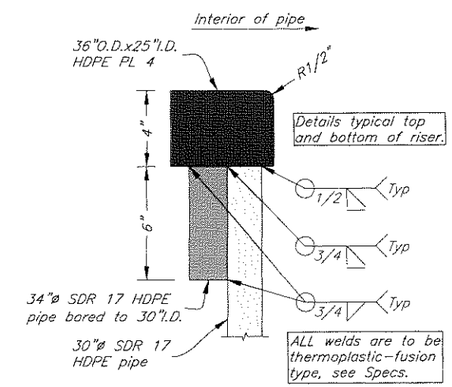

Section B–B
Pipe Riser

Floating Fender Notes:

1. Final design of the floating rubber fender shall be performed by the fender manufacturer. Details and dimensions shown are minimum requirements. Modifications may be proposed to the Engineer for approval. Also see contract specifications for additional fender construction requirements and material properties not indicated. Color to be Black.

2. The fender manufacturer shall determine the overall length of fender to provide the minimum freeboard height indicated. Calculations showing total weight (including crowns, lines and risers where applicable) and estimated draft shall be submitted to the Engineer for approval prior to fabrication.

3. Length of HDPE pipe riser may be subject to minor change pending final freeboard calculations. Variations of HDPE pipe materials may also be accepted depending on availability of specified pipe sizes. Contractor may propose alternate designs for approval and shall coordinate between riser and fender supplier as required.

4. Unless otherwise noted, all steel materials incorporated into the fender unit shall be hot–dip galvanized after fabrication.

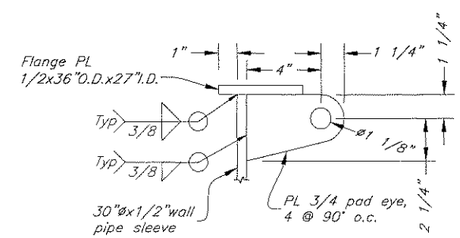

Detail 1
Lift Eye

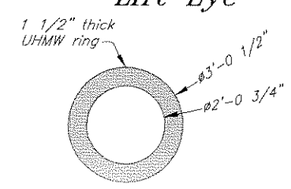

UHMW Rotation
Bearing Plan

DO NOT SCALE FROM THESE DRAWINGS USE DIMENSIONS

DESIGNED BY: K. Miller

STATE OF ALASKA 49th Kirk D. Miller CE-8550 REGISTERED PROFESSIONAL ENGINEER

3/12/10

CHECKED BY: T. Doggett
DRAFTED BY: Stoff

STATE OF ALASKA
DEPARTMENT OF TRANSPORTATION & PUBLIC FACILITIES
S.E. REGION DESIGN & ENGINEERING SERVICES DIVISION

Angoon Ferry Terminal Improvements, Re-Bid

Floating Fender and Riser Details

PATH: G:\Eng\68502\WF\Planset\52 Fender & Riser N3 & N7.DWG
PLOT: PSPACE 1=1
Fri, 12/Mar/10 12:31PM

REVISIONS			PROJECT DESIGNATION	YEAR	SHEET NO.	TOTAL SHEETS
NO.	DATE	DESCRIPTION	68502	2010	52	72

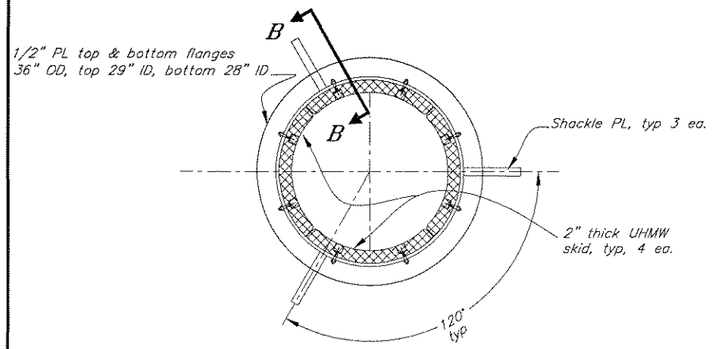

Plan
Mooring Crown

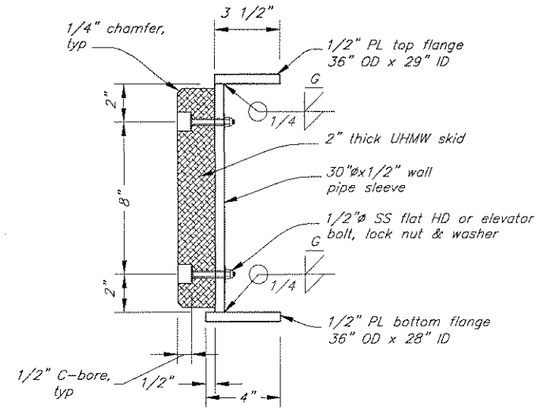

Section B–B
Mooring Crown

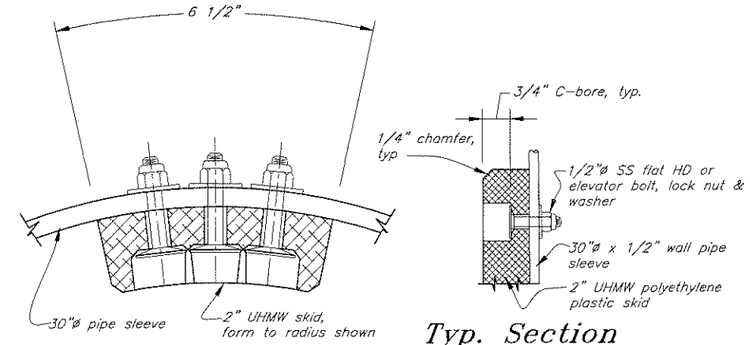

Plan
UHMW Fender Skid

Typ. Section
UHMW Skid Connection

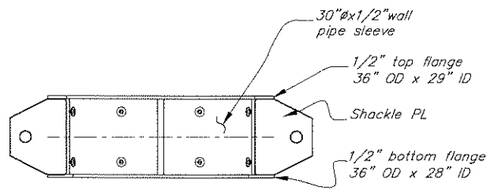

Elevation
Mooring Crown

Approx. Weight = 450 LB.±

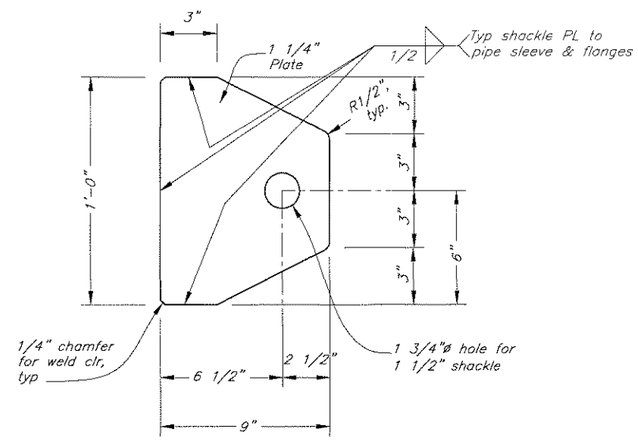

Crown Shackle Plate

Typ 4 EA

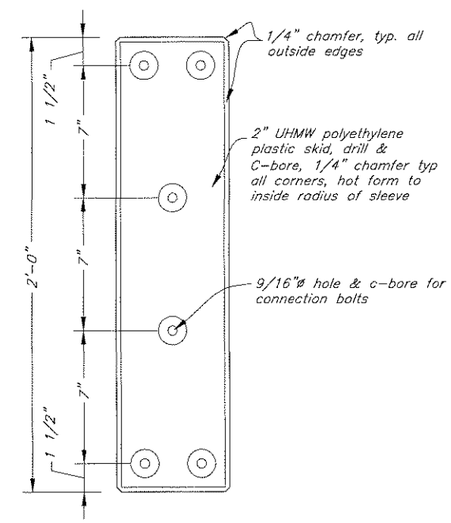

Elevation
UHMW Fender Skid

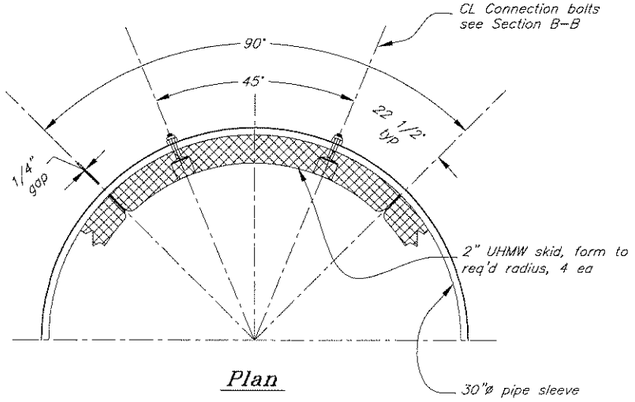

Plan

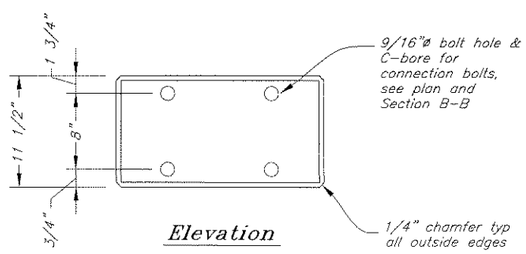

Elevation

Detail
UHMW Mooring Crown Skid

DO NOT SCALE FROM THESE DRAWINGS USE DIMENSIONS

DESIGNED BY: K. Miller

STATE OF ALASKA 49th Kirk D. Miller CE-8550 REGISTERED PROFESSIONAL ENGINEER

3/17/10

CHECKED BY: T. Doggett

DRAFTED BY: Staff

STATE OF ALASKA
DEPARTMENT OF TRANSPORTATION
& PUBLIC FACILITIES
S.E. REGION DESIGN & ENGINEERING SERVICES DIVISION

Angoon Ferry Terminal Improvements, Re-Bid

Floating Fender Details

PATH: Q:\Ang\68502\MF\Planset\53 Crown & Fender Details N3 & N7.DWG

PLOT: PSPACE 1=1 Fri, 12/Mar/10 12:31PM

REVISIONS			PROJECT DESIGNATION	YEAR	SHEET NO.	TOTAL SHEETS
NO.	DATE	DESCRIPTION	68502	2010	53	72

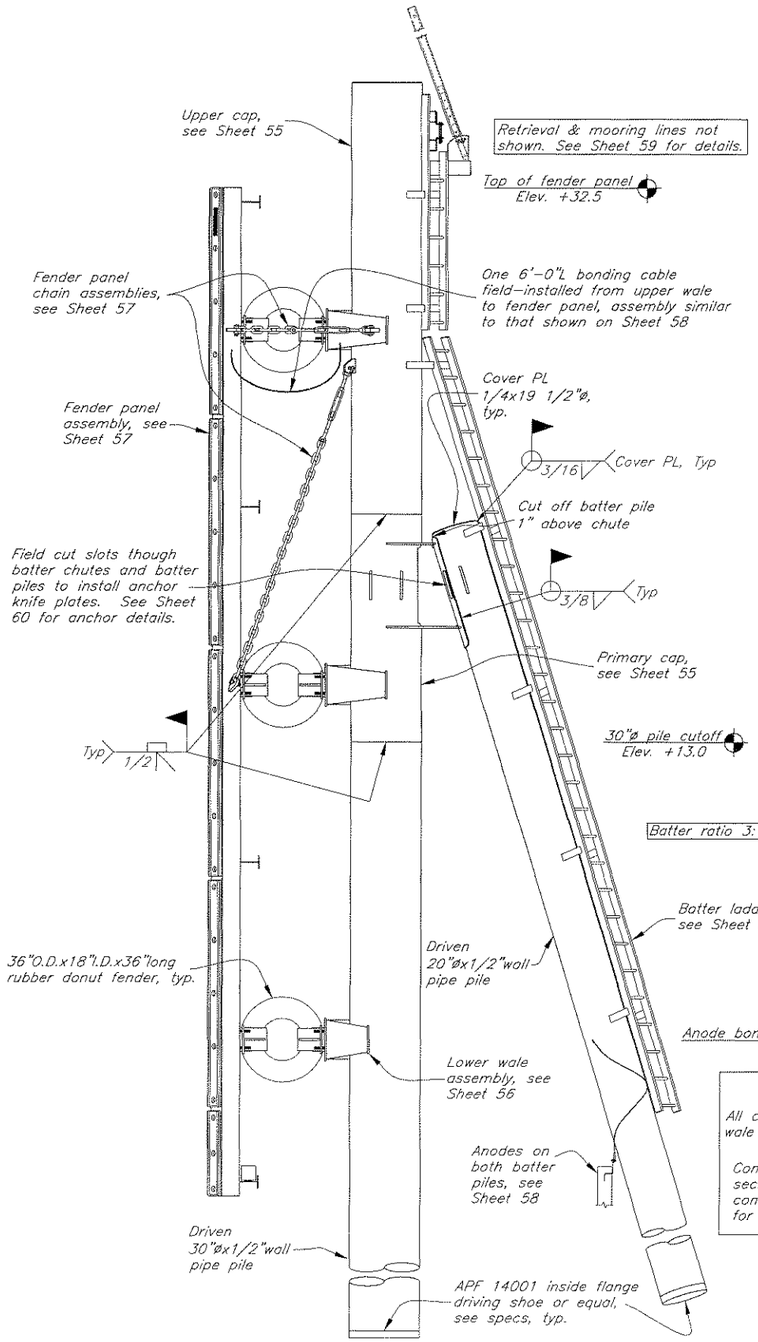

Side Elevation
Structures N4, N5, & N6

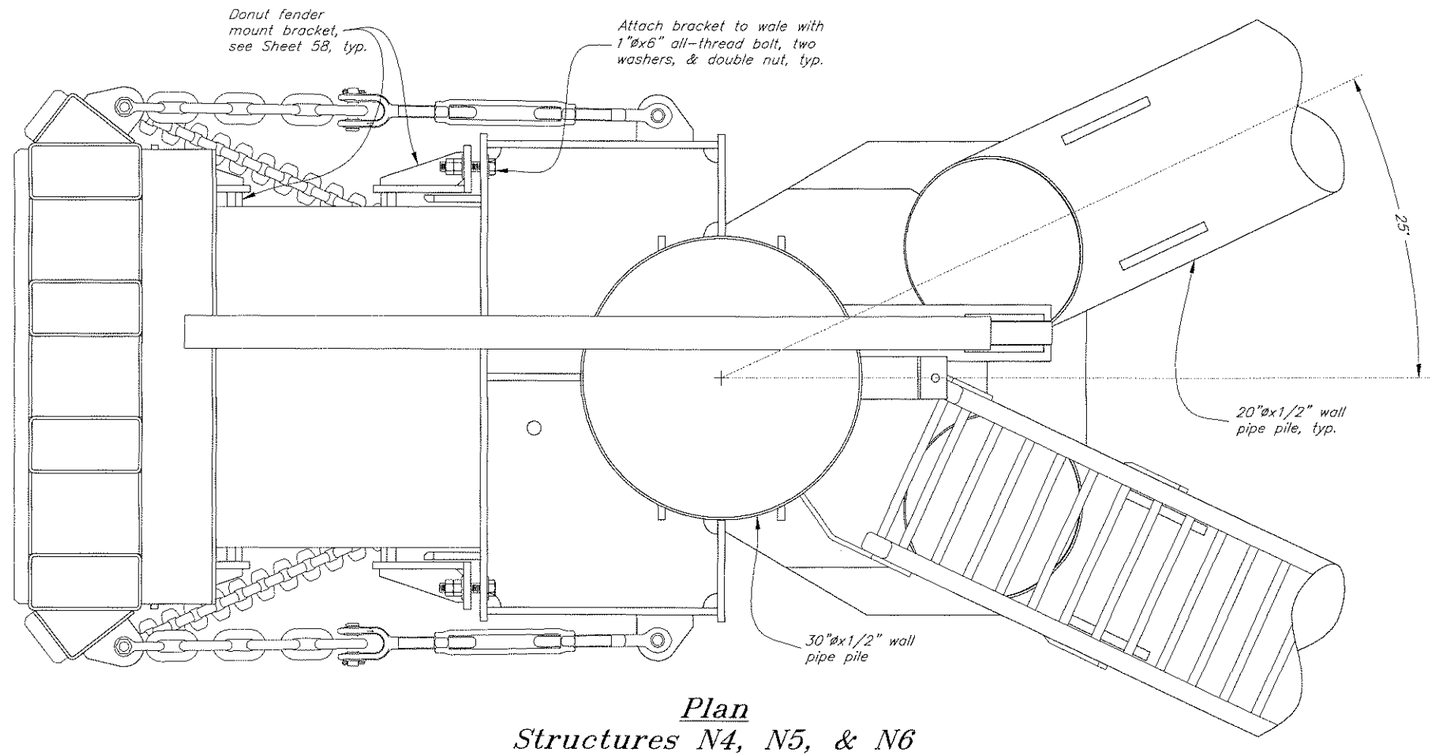

Plan
Structures N4, N5, & N6

DO NOT SCALE FROM THESE DRAWINGS USE DIMENSIONS

DESIGNED BY: Staff

STATE OF ALASKA 49th Kirk D. Miller CE-8550 REGISTERED PROFESSIONAL ENGINEER 4/27/10

CHECKED BY: K. Miller

DRAFTED BY: M. Walters

STATE OF ALASKA
DEPARTMENT OF TRANSPORTATION
& PUBLIC FACILITIES
S.E. REGION DESIGN & ENGINEERING SERVICES DIVISION

Angoon Ferry Terminal Improvements, Re-Bid

Hanging-Fender Dolphins N4, N5, & N6

PATH: O:\Ang\68502\MF\Planset\54 N4-6.dwg

PLOT: PSPACE 1=1 Tab: N4 5 6 Mon, 19/Apr/10 02:55PM

REVISIONS			PROJECT DESIGNATION	YEAR	SHEET NO	TOTAL SHEETS
NO.	DATE	DESCRIPTION	68502	2010	54	72

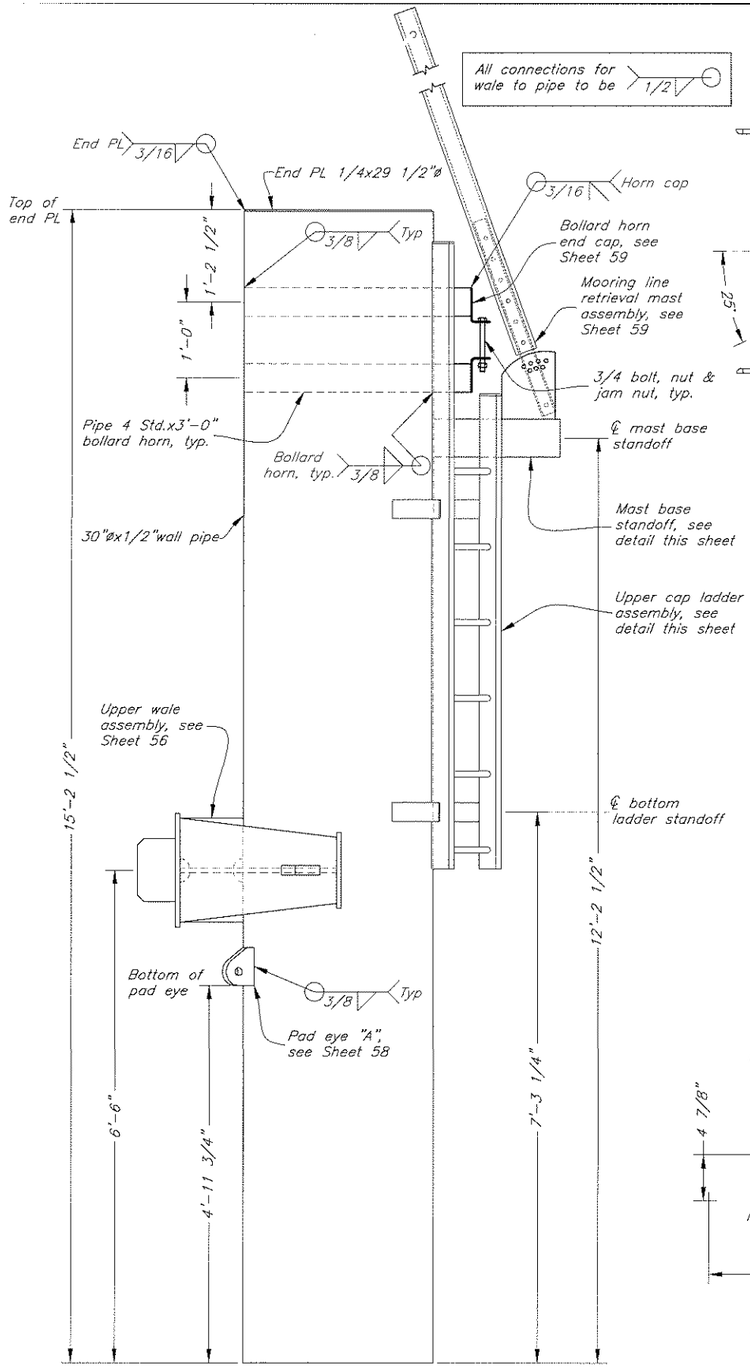

Side Elevation
Upper Cap

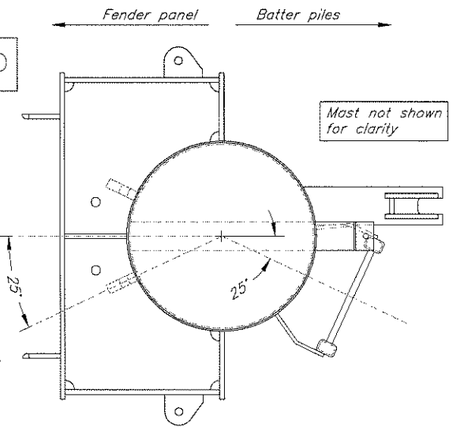

Plan
Upper Cap

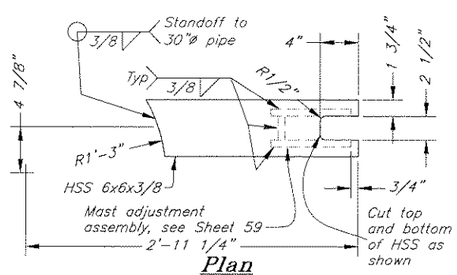

Plan
Mast Base Standoff

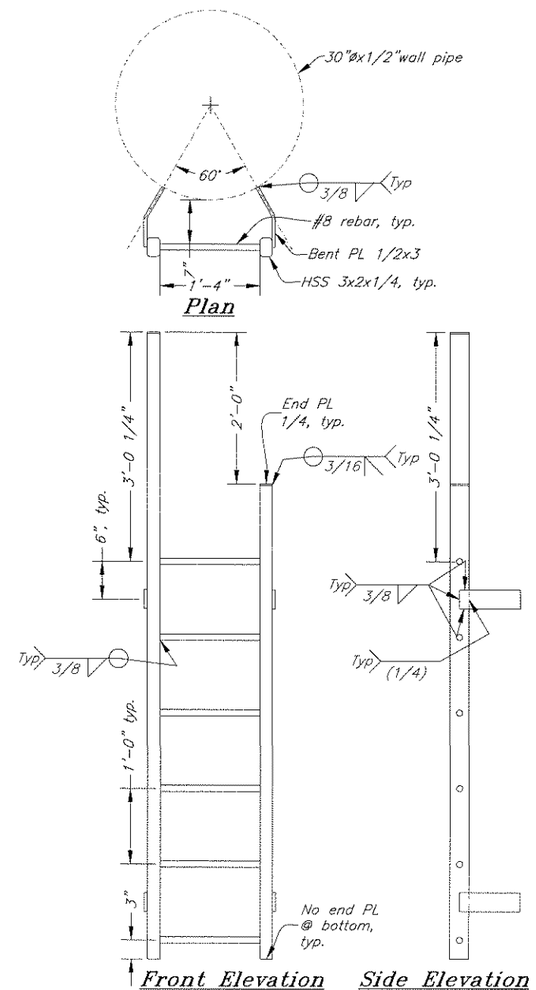

Upper Cap Ladder

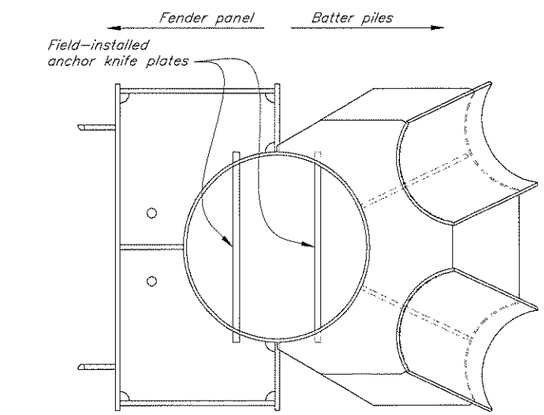

Plan
Primary Cap

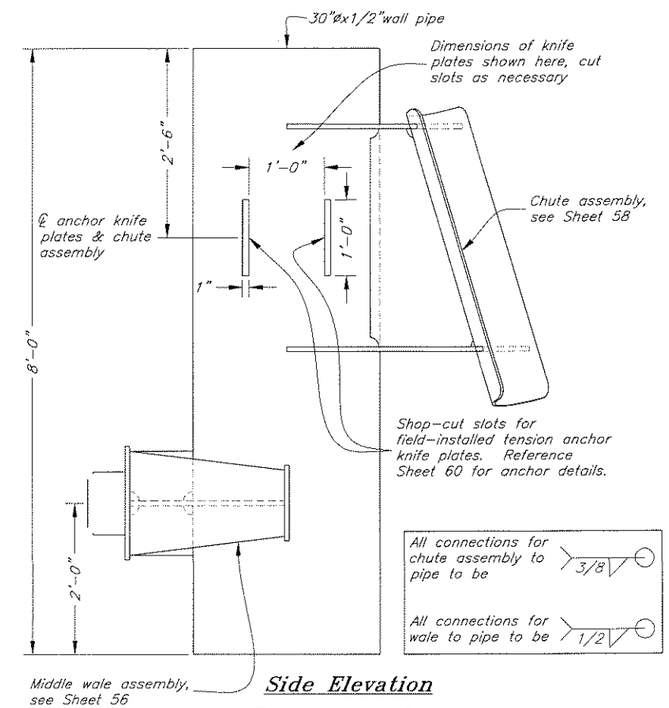

Side Elevation
Primary Cap

DO NOT SCALE FROM THESE DRAWINGS USE DIMENSIONS

DESIGNED BY: Staff

STATE OF ALASKA 49th Kirk D. Miller CE-8550 REGISTERED PROFESSIONAL ENGINEER

3/17/10

CHECKED BY: K. Miller
DRAFTED BY: M. Walters

STATE OF ALASKA
DEPARTMENT OF TRANSPORTATION
& PUBLIC FACILITIES
S.E. REGION DESIGN & ENGINEERING SERVICES DIVISION

Angoon Ferry Terminal
Improvements, Re-Bid

Dolphin Caps
N4, N5, & N6

PATH: Q:\Ang\68502\MF\Planset\55 Caps N4-6.dwg
PLOT: PSPACE 1=1 Tab: Caps N4 5 6
Fri, 12/Mar/10 12:32PM

REVISIONS			PROJECT DESIGNATION	YEAR	SHEET NO.	TOTAL SHEETS
NO.	DATE	DESCRIPTION				
			68502	2010	55	72

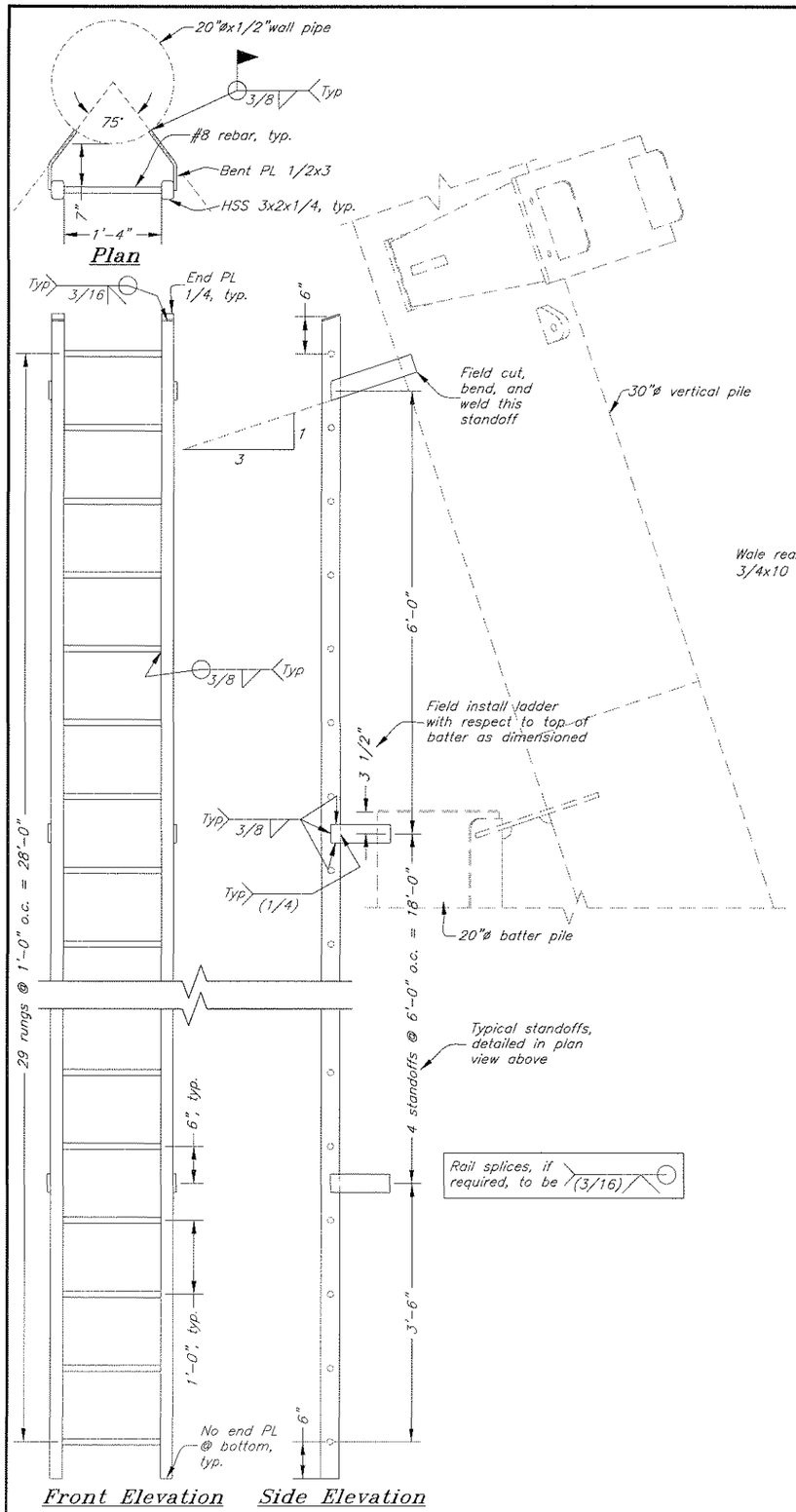

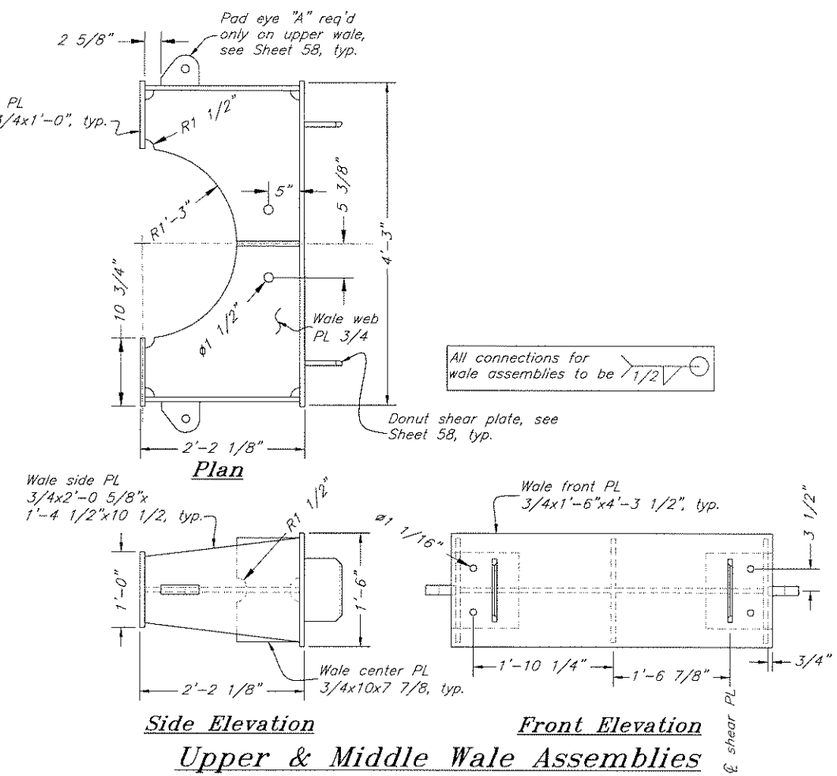

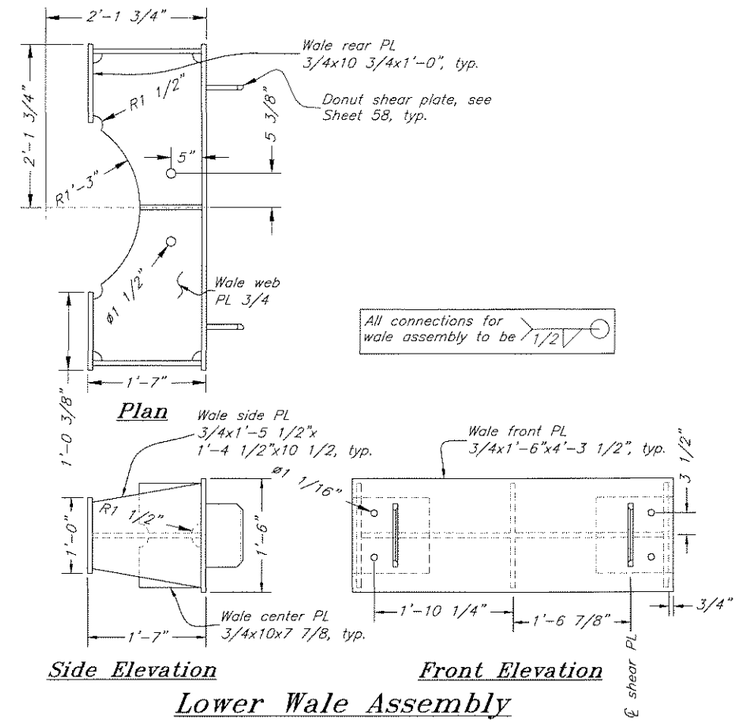

DO NOT SCALE FROM THESE DRAWINGS USE DIMENSIONS

DESIGNED BY: Staff

STATE OF ALASKA 49th Kirk D. Miller CE-8550 REGISTERED PROFESSIONAL ENGINEER

3/17/10

CHECKED BY: K. Miller

DRAFTED BY: M. Walters

STATE OF ALASKA
DEPARTMENT OF TRANSPORTATION
& PUBLIC FACILITIES
S.E. REGION DESIGN & ENGINEERING SERVICES DIVISION

Angoon Ferry Terminal
Improvements, Re-Bid

Wale Assemblies &
Batter Ladder
N4, N5, & N6

PATH: O:\Ang\68502\MF\Planset\56 Wales & Ladder N4-6.dwg
PLOT: PSPACE 1=1 Tab: Wales & Ladder Fri, 12/Mar/10 12:32PM

REVISIONS			PROJECT DESIGNATION	YEAR	SHEET NO.	TOTAL SHEETS
NO.	DATE	DESCRIPTION	68502	2010	56	72

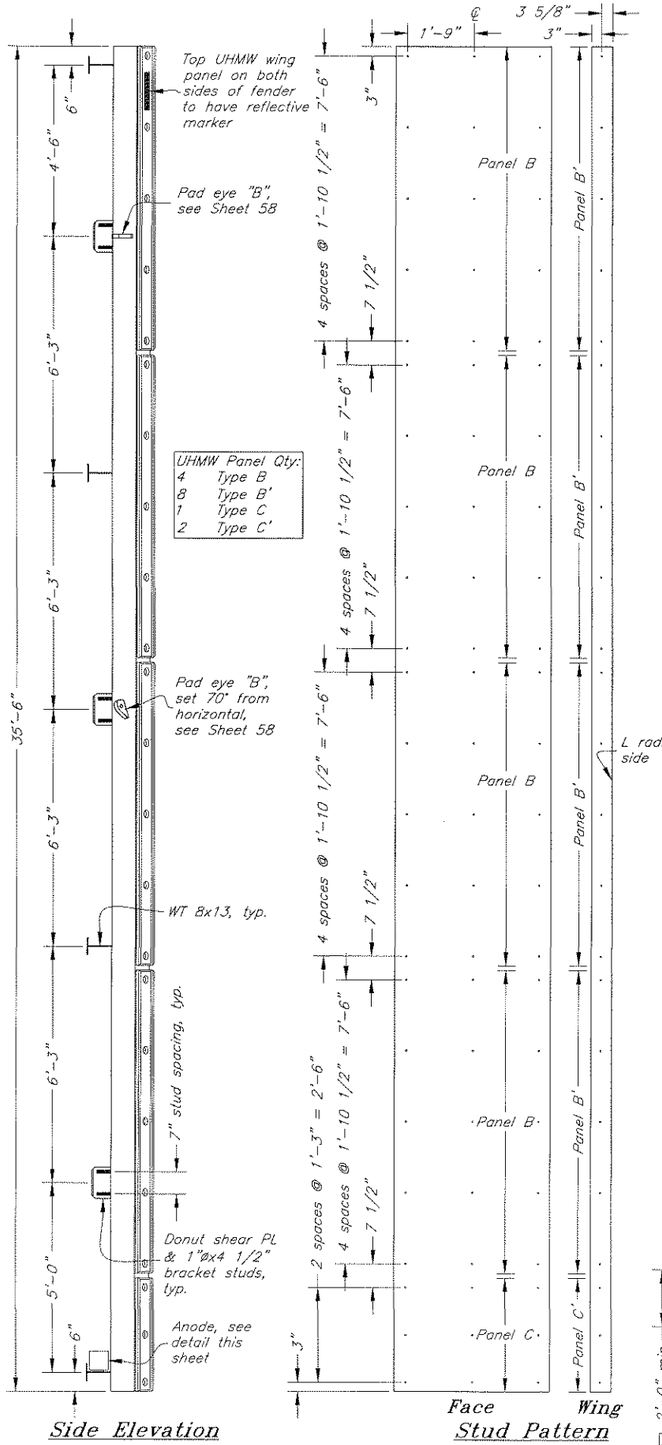

Dolphin Fender Panels
N4, N5, & N6

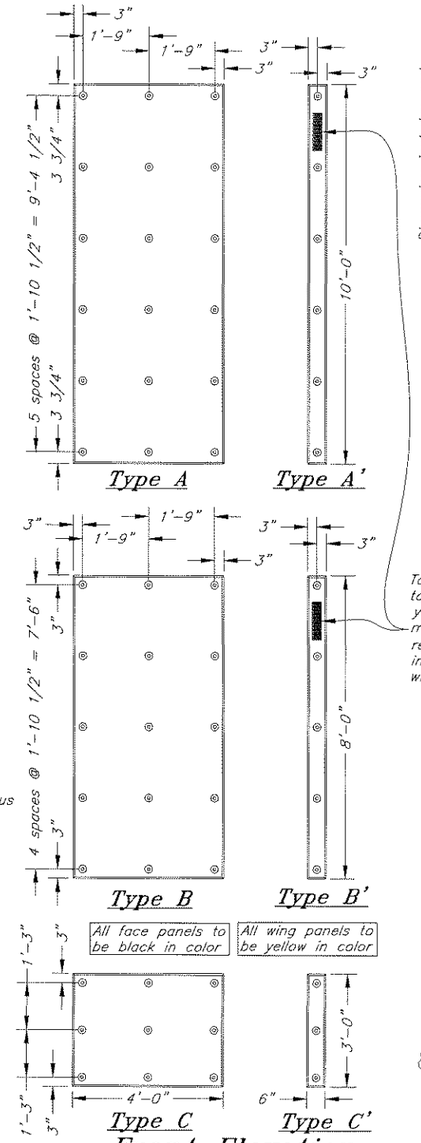

Front Elevation
1 1/2" UHMW Panels

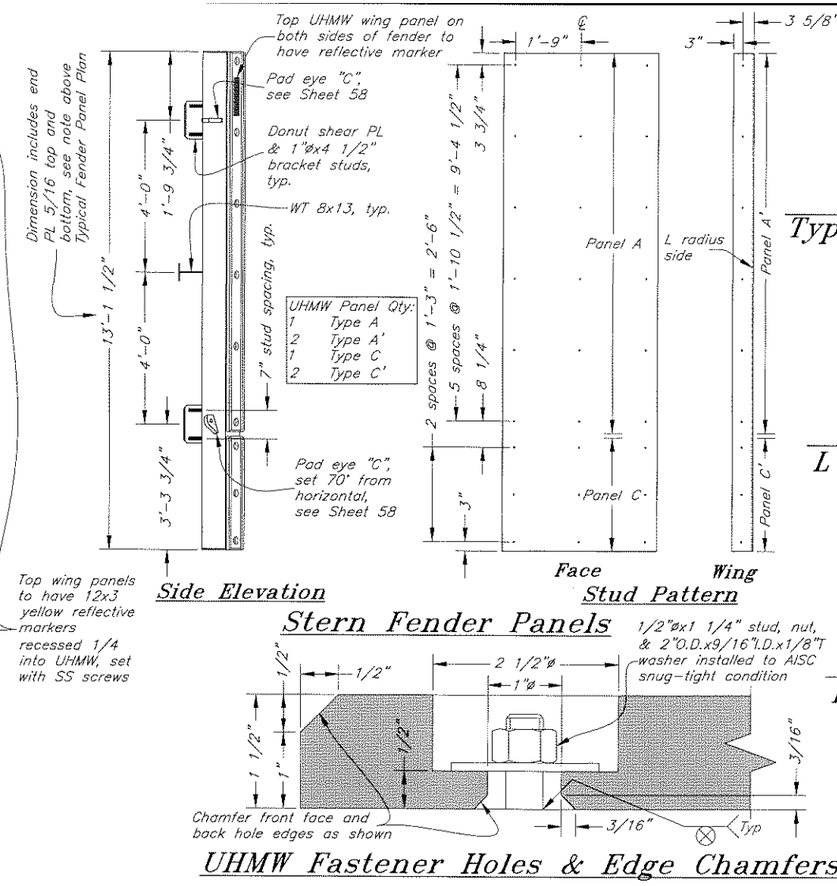

Stern Fender Panels

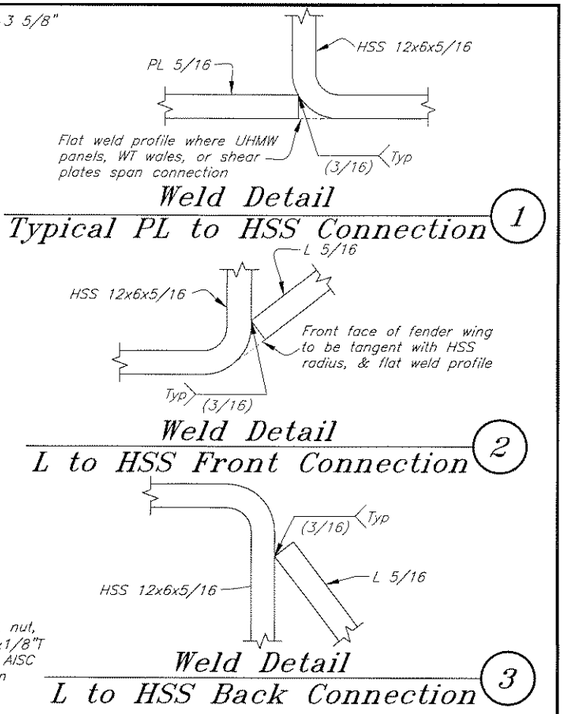

UHMW Fastener Holes & Edge Chamfers

Stern fender panels to have end PL 5/16 top and bottom of panel. Both end plates to have 1 1/2"ø drain holes ceneterd over every hollow section of panel. Weld all around with 1/4 single-V-groove.

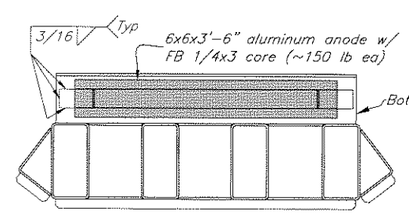

Fender Panel Anode
N4, N5, & N6

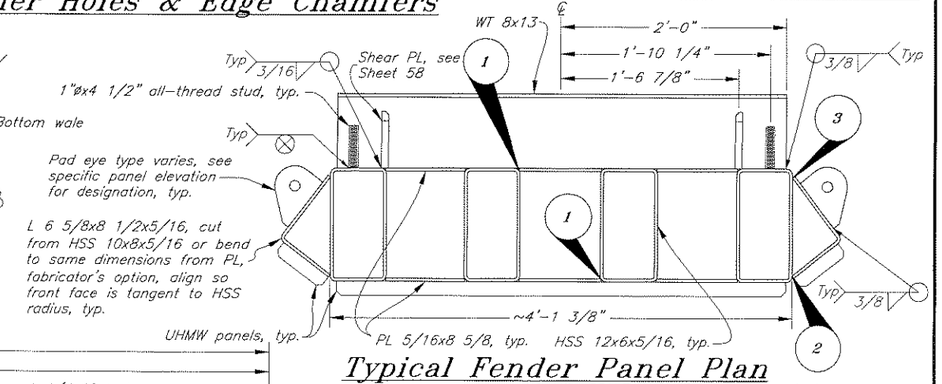

Typical Fender Panel Plan

DO NOT SCALE FROM THESE DRAWINGS USE DIMENSIONS

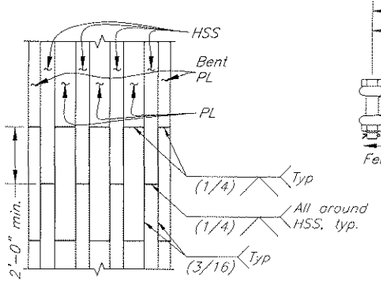

Splice panel as generally indicated if required for galvanizing

Typical Panel Splice Detail
(Panel front elevation)

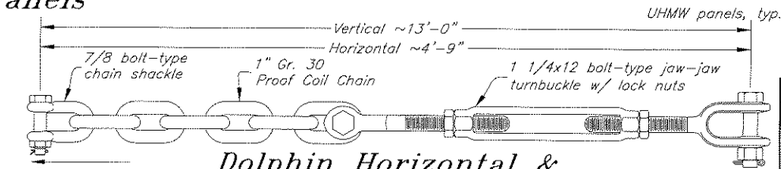

Dolphin Horizontal & Vertical Chains

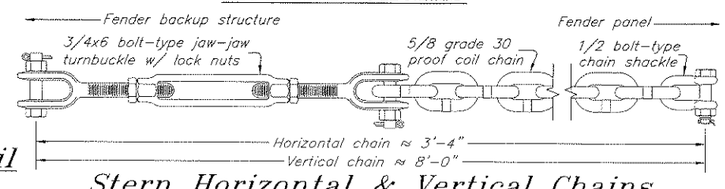

Stern Horizontal & Vertical Chains

DESIGNED BY: Staff
CHECKED BY: K. Miller
DRAFTED BY: M. Walters
PATH: Q:\Ang\68502\MF\Planset\57 Fender Panels.dwg
PLOT: PSPACE 1=1 Tab: Fender Panels
Tue, 20/Apr/10 11:22AM

STATE OF ALASKA
Kirk D. Miller
CE-8550
49th
REGISTERED PROFESSIONAL ENGINEER
4/27/10

STATE OF ALASKA
DEPARTMENT OF TRANSPORTATION
& PUBLIC FACILITIES
S.E. REGION DESIGN & ENGINEERING SERVICES DIVISION

Angoon Ferry Terminal
Improvements, Re-Bid

Fender Panels

REVISIONS			PROJECT DESIGNATION	YEAR	SHEET NO.	TOTAL SHEETS
NO.	DATE	DESCRIPTION	68502	2010	57	72

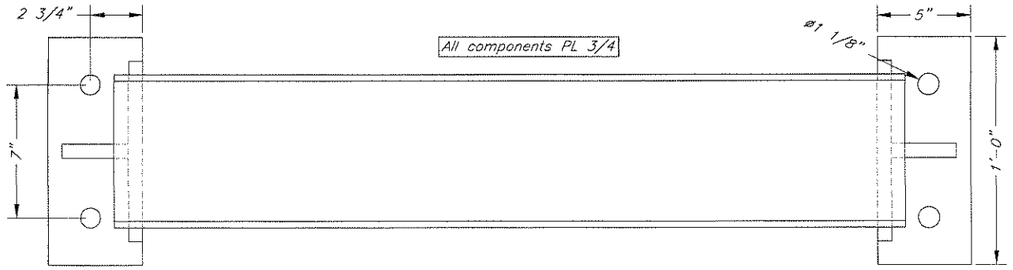

Front Elevation

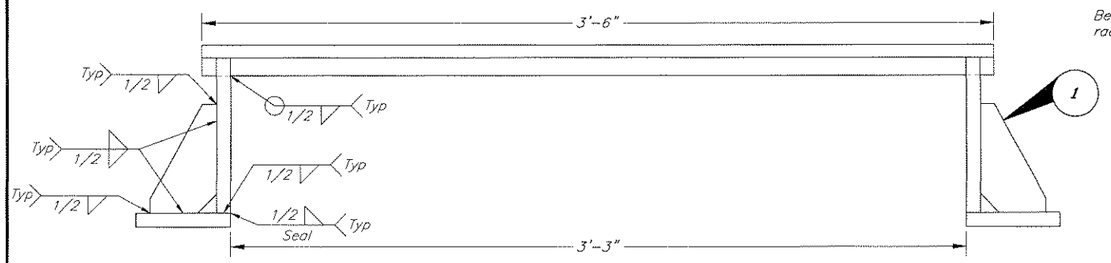

Plan

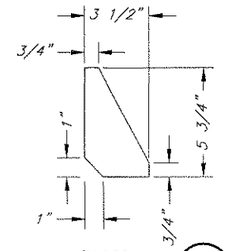

Stiffener Detail 1

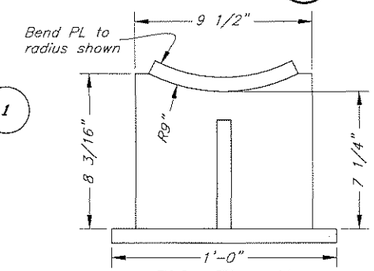

Side Elevation

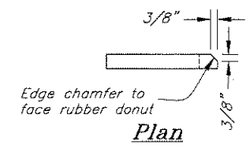

Plan

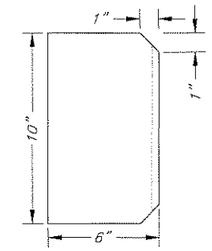

Elevation

Shear PL 3/4

Donut Fender Mount Bracket

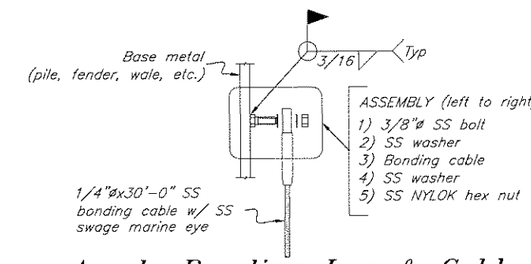

Anode Bonding Lug & Cable Connection Detail

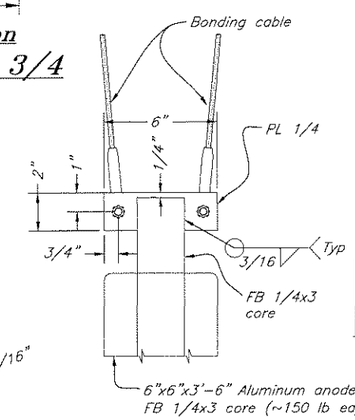

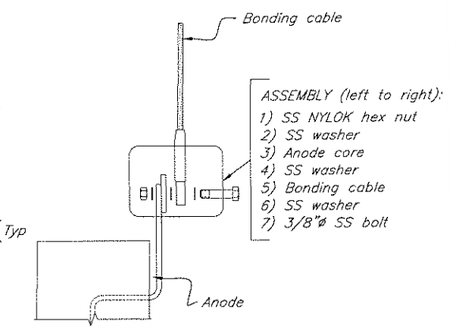

Hanging Pile Anode & Cable Connection Detail

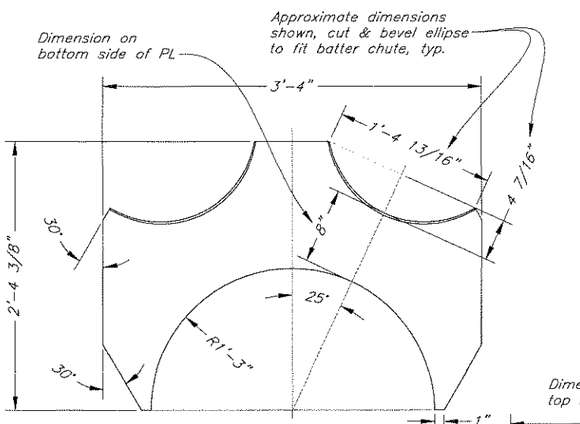

Upper Chute Flange

PL 3/4

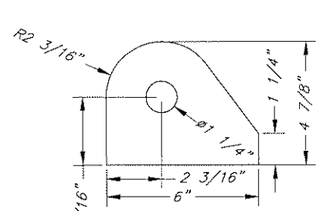

Pad Eye "A"

PL 1 1/2

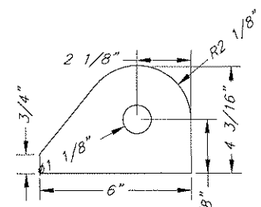

Pad Eye "B"

PL 1 1/4

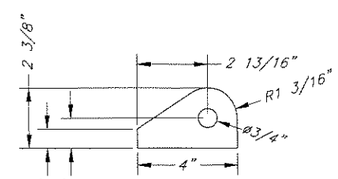

Pad Eye "C"

PL 5/8

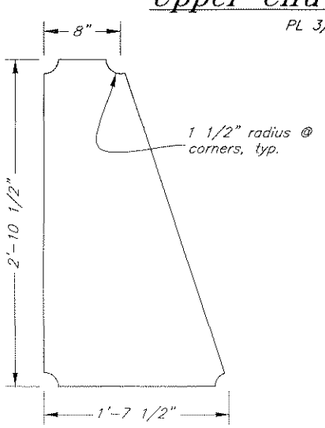

Chute Web

PL 5/8

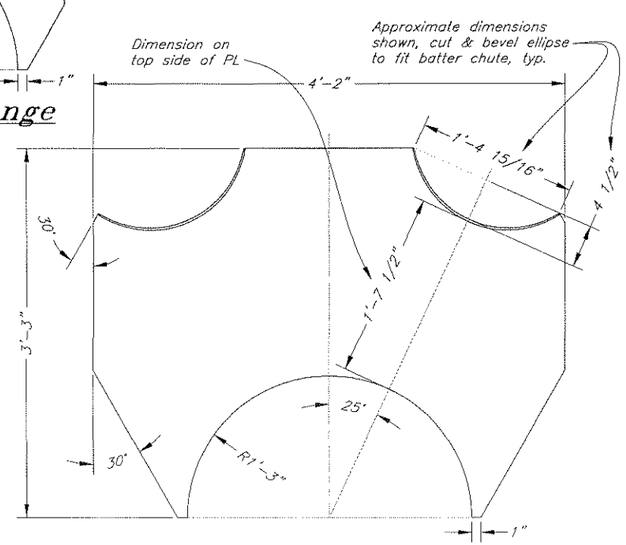

Lower Chute Flange

PL 3/4

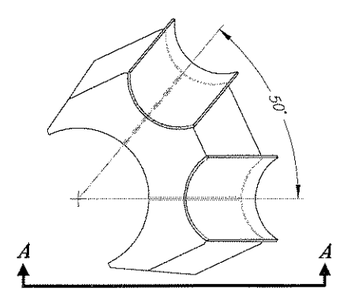

Plan

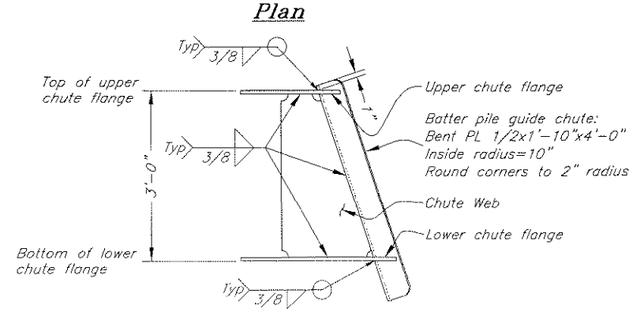

Elevation A-A

Chute Assembly

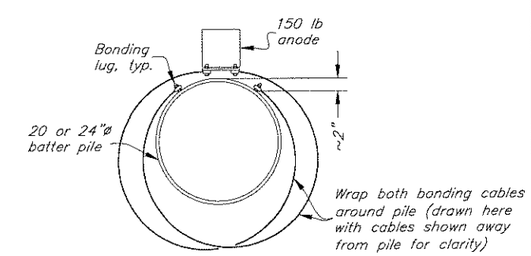

Typical Section

Pile Anode Cable Wrap

DO NOT SCALE FROM THESE DRAWINGS USE DIMENSIONS

DESIGNED BY: Staff

STATE OF ALASKA 49th Kirk D. Miller CE-8550 REGISTERED PROFESSIONAL ENGINEER

3/12/10

CHECKED BY: K. Miller

DRAFTED BY: M. Wolters

STATE OF ALASKA
DEPARTMENT OF TRANSPORTATION
& PUBLIC FACILITIES
S.E. REGION DESIGN & ENGINEERING SERVICES DIVISION

Angoon Ferry Terminal Improvements, Re-Bid

Miscellaneous Details 1

PATH: Q:\Ang\68502\MF\Planset\58 Common Details 1.dwg

PLOT: PSPACE 1=1 Tab: Bracket Anode Chute Fri, 12/Mar/10 12:33PM

REVISIONS			PROJECT DESIGNATION	YEAR	SHEET NO.	TOTAL SHEETS
NO.	DATE	DESCRIPTION	68502	2010	58	72

Notes:

1. S-50 lock assemblies shown provided by Robishaw Engineering Co.
2. Confirm all measurements and information with Robishaw Engineering Co. and adjust as required.

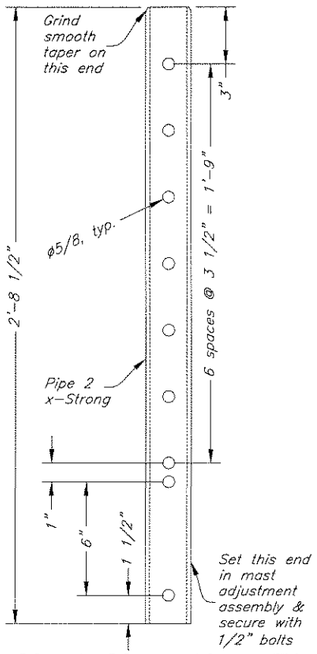

Mast Mounting Pipe

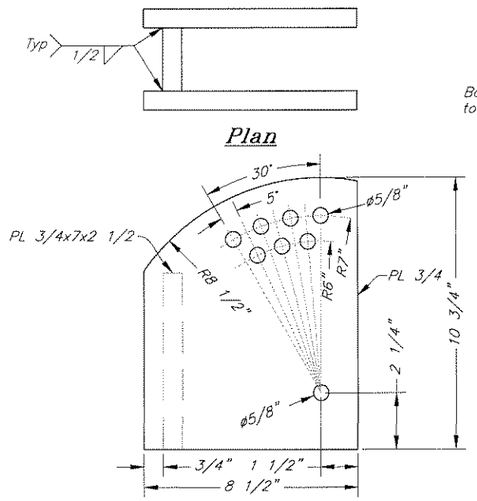

Mast Adjustment Assembly

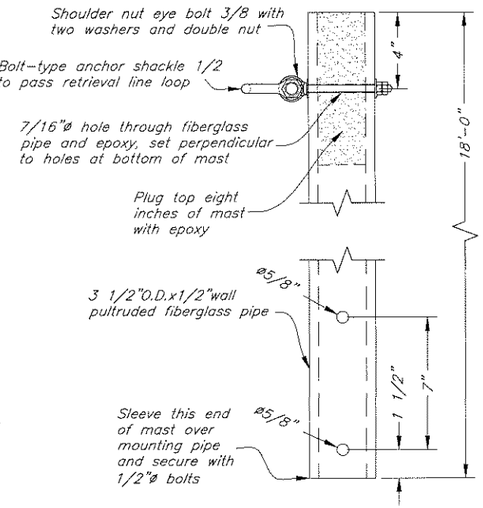

Mooring Line Retrieval Mast

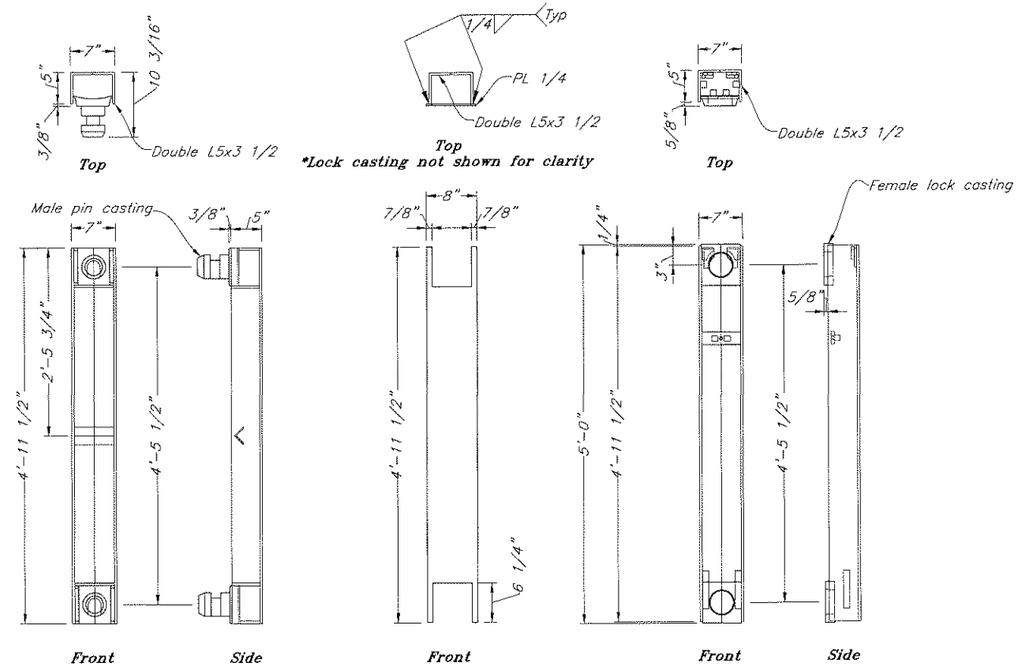

S-50 Male Lock Assembly

Cover Plate

S-50 Female Lock Assembly

Lock Assembly & Cover Plates

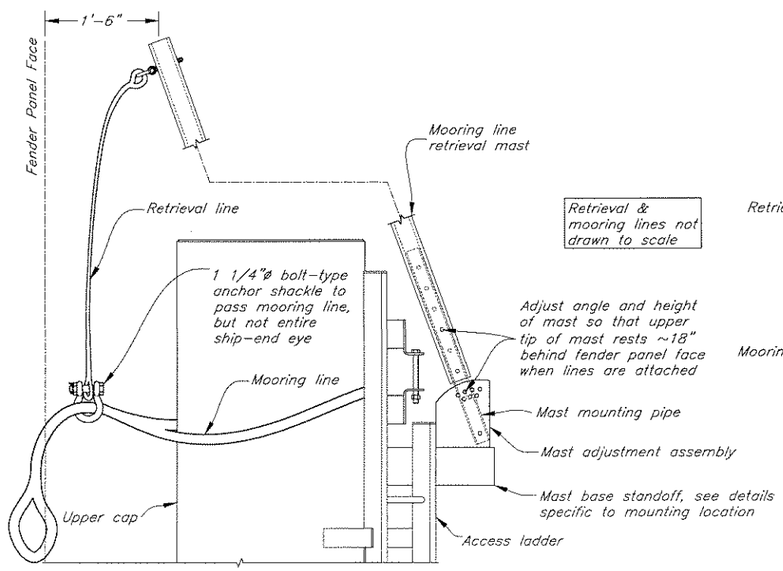

Typical Dolphin Mast

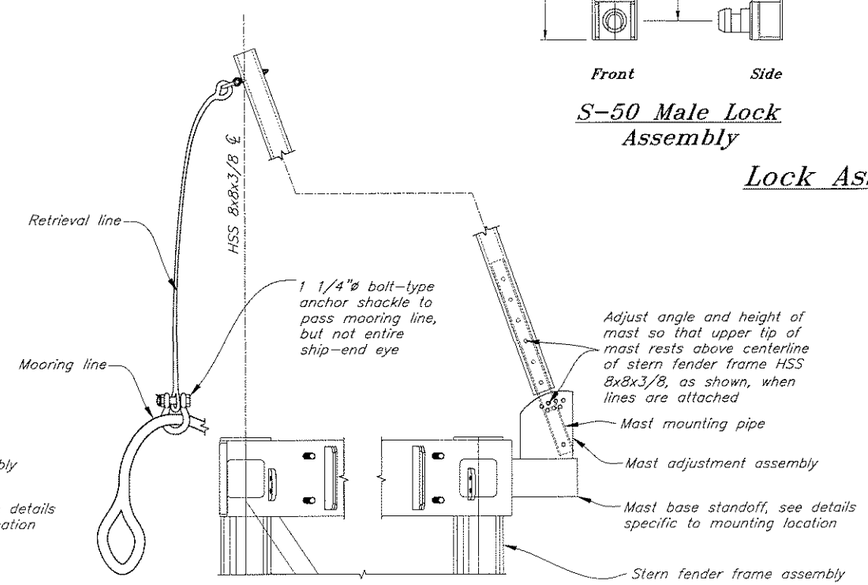

Typical Float Mast

Side Elevation
Mooring Line Retrieval Assembly

Bollard Horn End Cap

PL 1/4

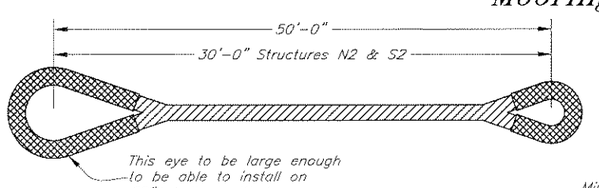

Mooring Line

Line to be 2"ø Samson SSR-1200-8 or approved equal, protective sheath at eyes. Eye loop splice lengths per mfr. recommendation.

Minimum line length shown. Final line lengths as directed by Engineer.

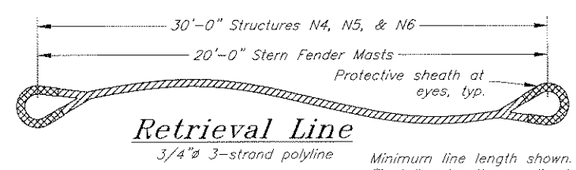

Retrieval Line

3/4"ø 3-strand polyline

Minimum line length shown. Final line lengths as directed by Engineer.

DO NOT SCALE FROM THESE DRAWINGS USE DIMENSIONS

DESIGNED BY: Staff

STATE OF ALASKA 49th Kirk D. Miller CE-8550 REGISTERED PROFESSIONAL ENGINEER

3/17/10

CHECKED BY: K. Miller

DRAFTED BY: M. Wolters

STATE OF ALASKA
DEPARTMENT OF TRANSPORTATION
& PUBLIC FACILITIES
S.E. REGION DESIGN & ENGINEERING SERVICES DIVISION

Angoon Ferry Terminal Improvements, Re-Bid

Miscellaneous Details 2

PATH: O:\Ang\68502\MF\Planset\59 Common Details 2.dwg

PLOT: PSPACE 1=1 Tab: Mooring Line - Float Lock Fri, 12/Mar/10 12:33PM

REVISIONS			PROJECT DESIGNATION	YEAR	SHEET NO.	TOTAL SHEETS
NO.	DATE	DESCRIPTION	68502	2010	59	72

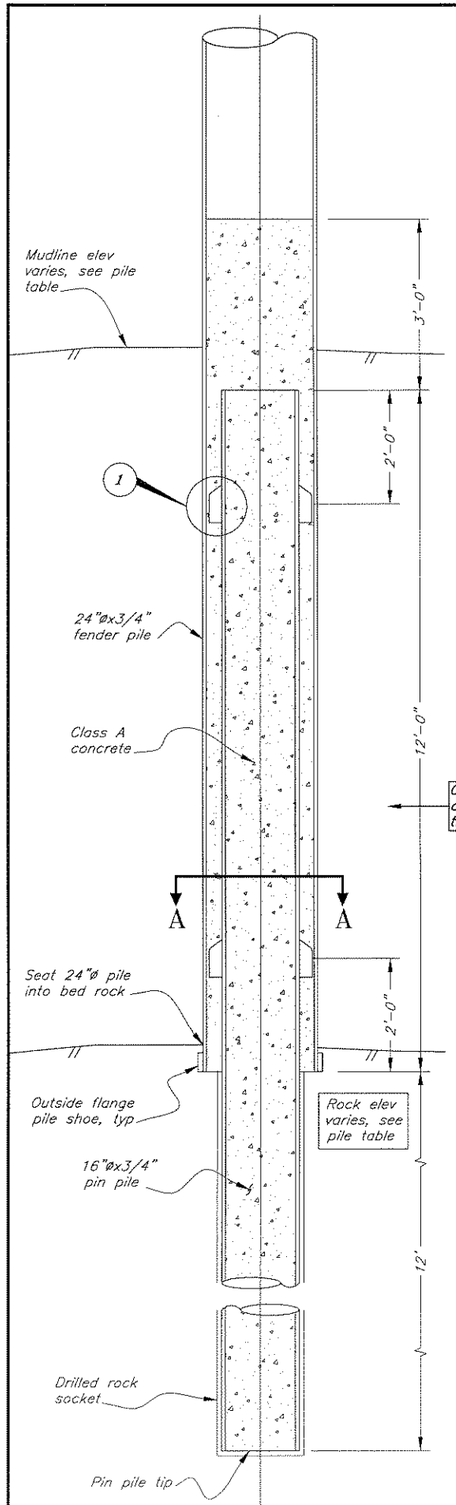

Pin Pile Socket Detail

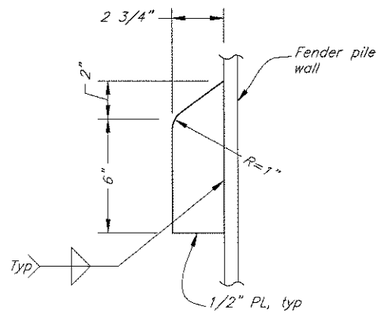

Detail 1

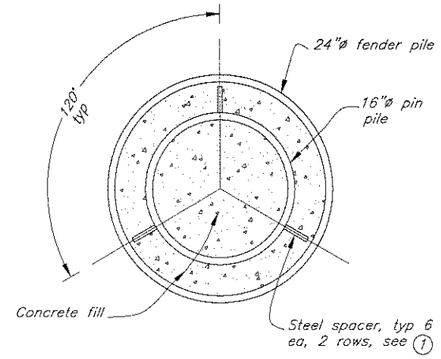

Section A–A

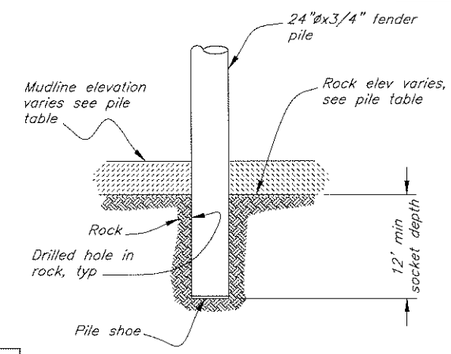

Contractor may choose between these two options

Pile Socket Detail

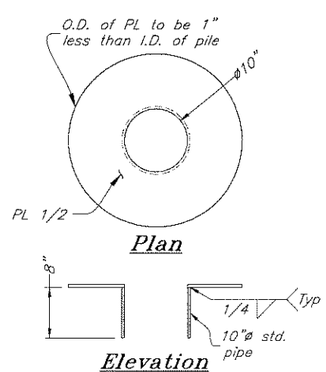

Grouting Cap

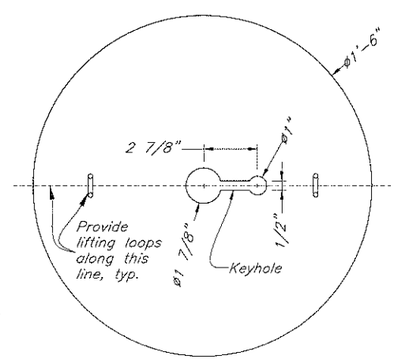

Anchor Bearing Plate

PL 3 3/4

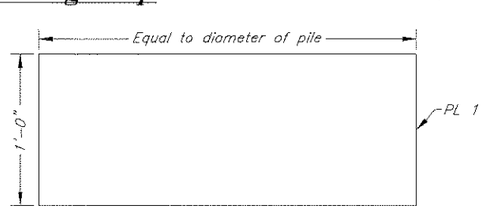

Anchor Knife Plate

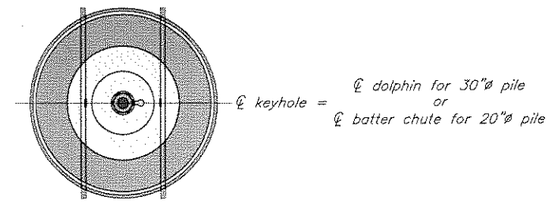

Plan

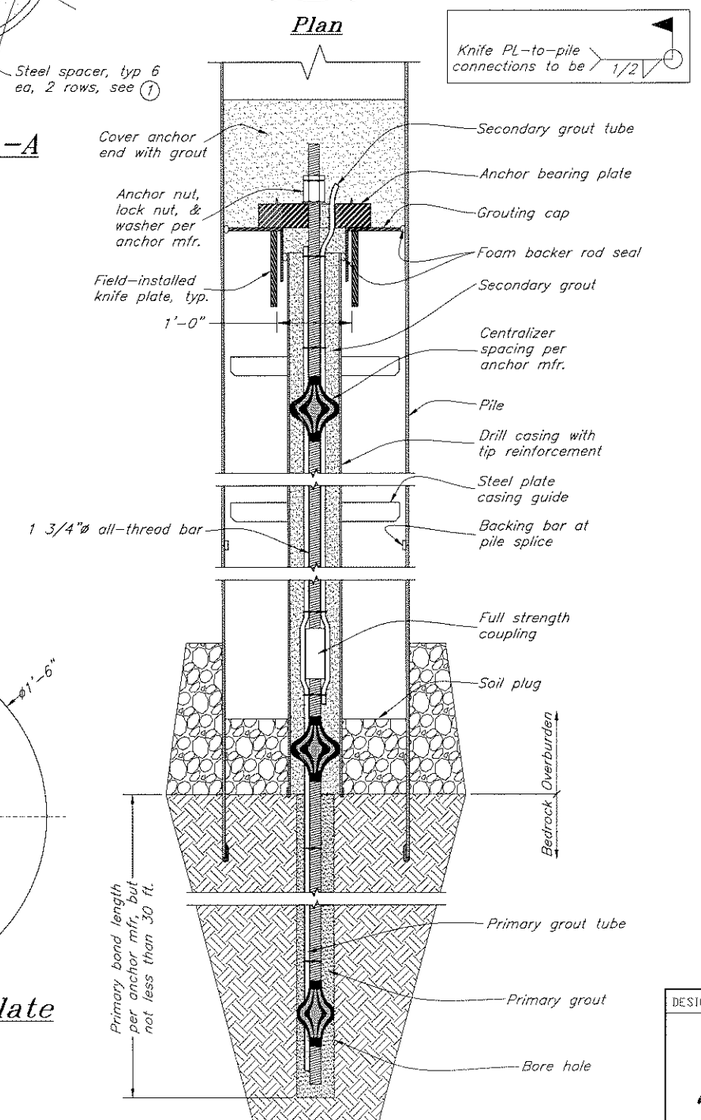

Typical Section

Tension Pile Anchor

30"ø pile shown, 20"ø & 24" piles similar, see component details this sheet for variations

Rock Anchor Notes

General

1) Reference Section 518 of the Special Provisions for tension pile requirements not noted or otherwise shown.

2) Anchoring details and methods shown are a suggested procedure. Anchoring methods or materials may be modified at the request of the Contractor to suit field conditions or otherwise – if approved in advance of construction by the Engineer.

Materials & Specifications

1) Anchor rods shall be all-thread bar per ASTM A-722 & ASTM A-615, Grade 150 ksi as manufactured by Williams Form Engineering Corporation or approved equal. Couplings shall be capable of developing the full tensile strength of the bar. Anchor rods shall be equipped with polyethylene centralizers to insure that the anchor rod is centered in the casing and drilled hole.

2) Steel anchor bearing or jacking plates shall be ASTM A572, Grade 50.

3) Primary and secondary grout mixtures shall be designed by the Contractor in accordance with recommendations provided by the anchor rod system manufacturer. Grout aggregates shall be import materials. Use of locally obtained aggregates will not be permitted. Submit grout mixture designs to the Engineer for approval prior to start of work.

4) Primary and secondary grout tube systems shall be determined by the Contractor in accordance with the anchor rod manufacturers recommendations and the selected grout mixture and type of grout pump.

Suggested Dolphin/Anchor Placement and Tensioning Procedure

1) Drive pile(s) to practical refusal and seat all piles into competent bedrock. Where possible, affix piles to permanent or temporary pile cap structures to minimize lateral deflections during anchor placement and tensioning.

2) Measure depth to bedrock at each pile location. Field attach upper casing guide plates at correct vertical position. Drive casing to surface of bedrock.

3) Drill hole through casing and into bedrock to the minimum specified or otherwise approved depth. Clean out all debris inside hole by flushing with water and air.

4) Place knife plate supports and grouting cap.

5) Install anchor rod and primary and secondary grout tube assemblies into casing/drilled hole.

6) Place primary grout. Primary grout shall be measured to insure that primary grout fills the drilled hole in rock. Allow grout to adequately cure to specified test strength.

7) Place anchor bearing plate and conduct performance and/or proof testing (reference Section 518 of the Special Provisions). For testing and proof load testing purposes, the Design Load (DL) shall be 175 kips for all piles.

8) Place secondary grout and tension to final lock-off load of 15 kips prior to secondary grout setup. Install lock-off washer and nuts. Cover end of rod and anchor nut with grout and complete remaining structure pile cap assembly, etc.

DO NOT SCALE FROM THESE DRAWINGS USE DIMENSIONS

DESIGNED BY: Staff

STATE OF ALASKA 49th Kirk D. Miller CE-8550 REGISTERED PROFESSIONAL ENGINEER 3/17/10

CHECKED BY: K. Miller
DRAFTED BY: M. Wolters

STATE OF ALASKA
DEPARTMENT OF TRANSPORTATION & PUBLIC FACILITIES
S.E. REGION DESIGN & ENGINEERING SERVICES DIVISION

Angoon Ferry Terminal Improvements, Re-Bid

Pile Rock Socket & Tension Anchor Details

PATH: Q:\Ang\68502\MF\Planset\60 Anchoring.dwg
PLOT: PSPACE 1=1 Tab: Anchor & Socket Fri, 12/Mar/10 12:33PM

REVISIONS			PROJECT DESIGNATION	YEAR	SHEET NO.	TOTAL SHEETS
NO.	DATE	DESCRIPTION	68502	2010	60	72

Notes:

1) Refer to Standard Drawings S-00.10, S-01.00, S-05.01, & S-30.03 for post-mounted signs (5 & 6).
2) Affix all other signs to rails, fencing, etc. as generally indicated and directed by the engineer.
3) Contractor shall provide necessary hardware for installation of all signs.
4) Hardware shall be of types generally indicated in Standard Drawings, though exact installation details may vary.
5) Field drill all holes in signs as required for mounting.
6) Refer to As-Builts for existing abutment to avoid interferrence between sign posts and abutment tie-backs.
7) See Sheet E2 for electric work near the abutment.

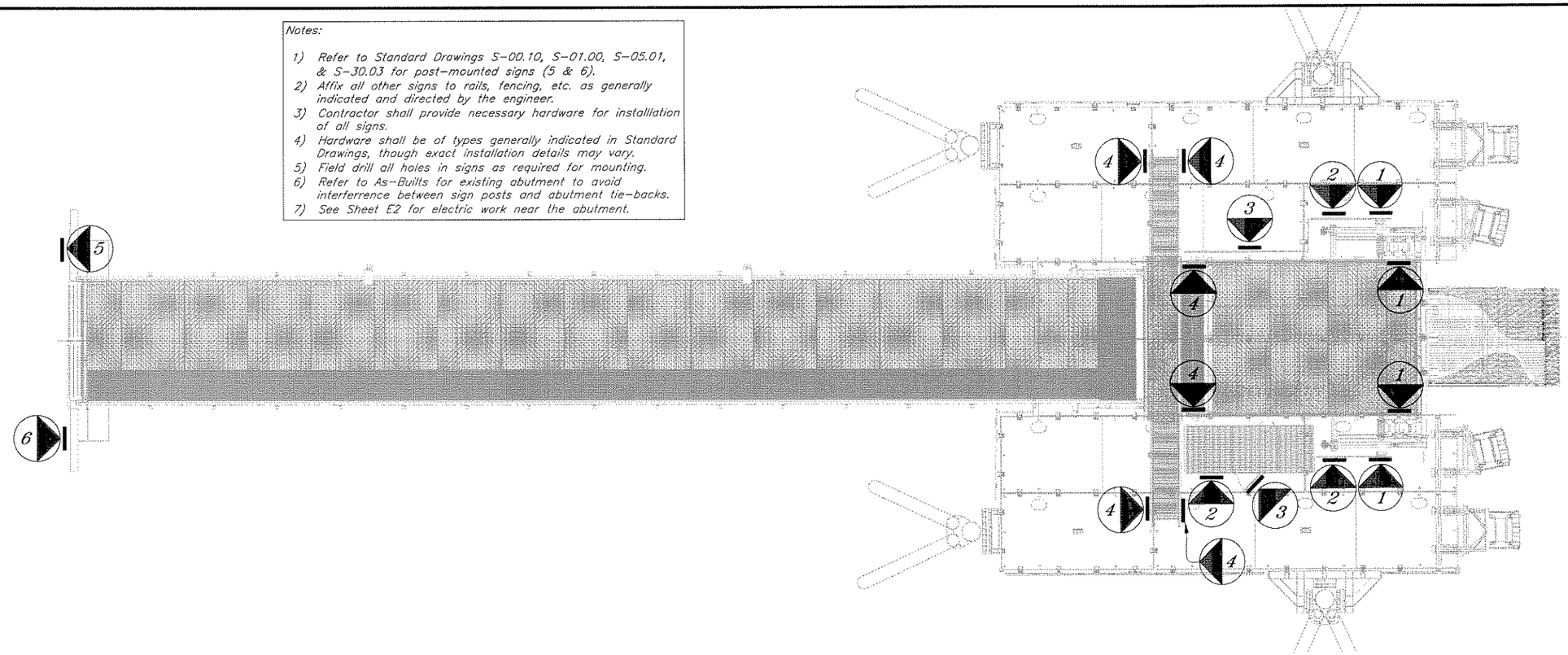

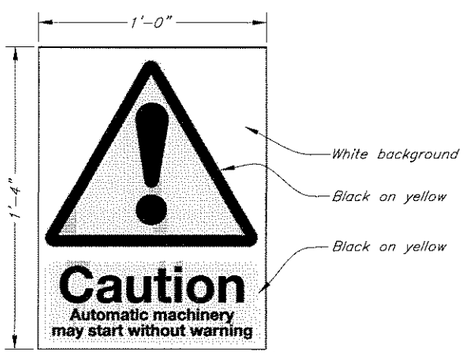

1 Sign Detail

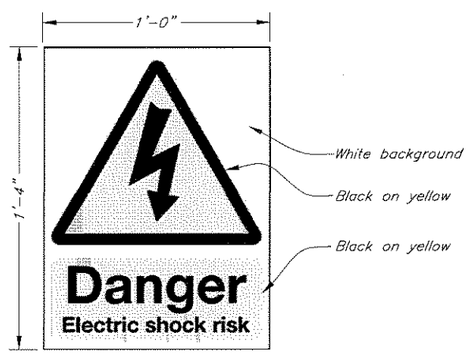

2 Sign Detail

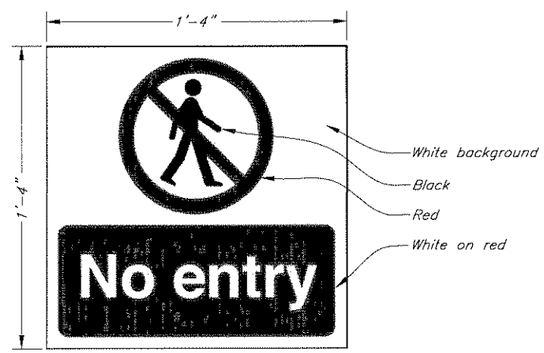

3 Sign Detail

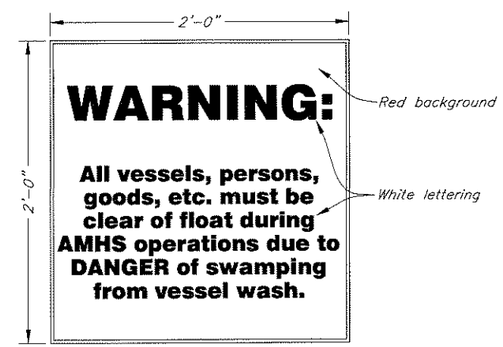

4 Sign Detail

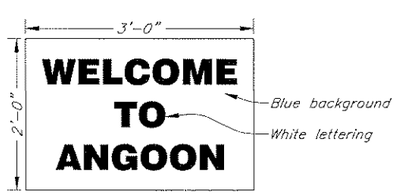

5 Sign Detail

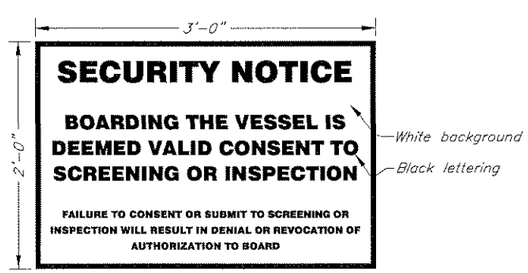

6 Sign Detail

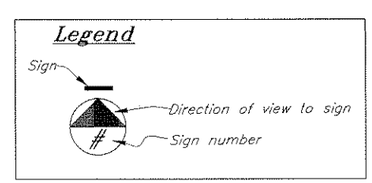

DO NOT SCALE FROM THESE DRAWINGS USE DIMENSIONS

DESIGNED BY: Staff

STATE OF ALASKA 49th Kirk D. Miller CE-8550 REGISTERED PROFESSIONAL ENGINEER 3/17/10

CHECKED BY: K. Miller
DRAFTED BY: M. Wollers

STATE OF ALASKA
DEPARTMENT OF TRANSPORTATION
& PUBLIC FACILITIES
S.E. REGION DESIGN & ENGINEERING SERVICES DIVISION

Angoon Ferry Terminal Improvements, Re-Bid

Signage Plan

PATH: Q:\Ang\68502\MF\Planset\61 Signage Plan.dwg
PLOT: PSPACE 1=1 Tab: Signs Fri, 12/Mar/10 12:33PM

REVISIONS			PROJECT DESIGNATION	YEAR	SHEET NO.	TOTAL SHEETS
NO.	DATE	DESCRIPTION	68502	2010	61	72

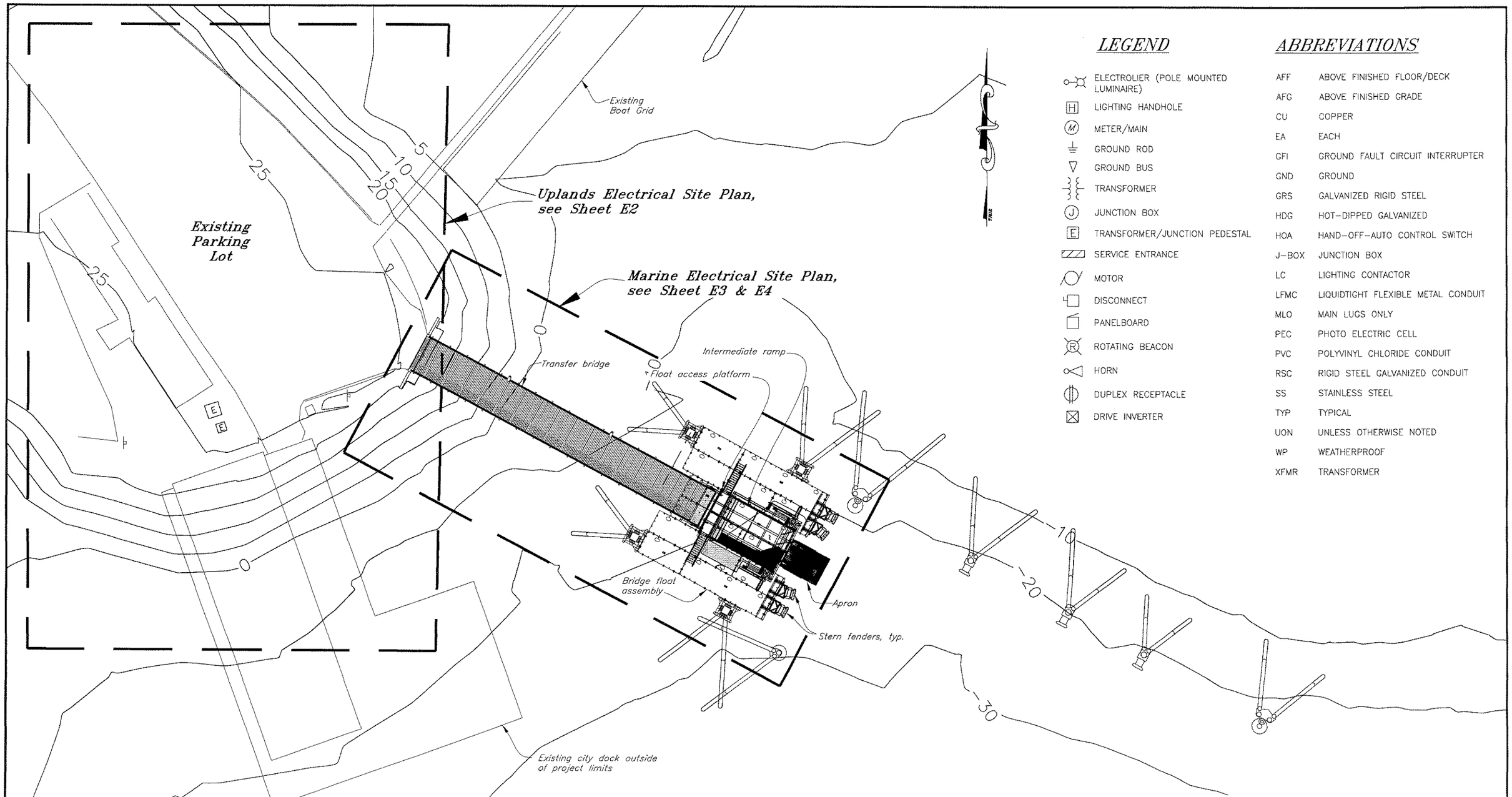

LEGEND

- ELECTROLIER (POLE MOUNTED LUMINAIRE)
- LIGHTING HANDHOLE
- METER/MAIN
- GROUND ROD
- GROUND BUS
- TRANSFORMER
- JUNCTION BOX
- TRANSFORMER/JUNCTION PEDESTAL
- SERVICE ENTRANCE
- MOTOR
- DISCONNECT
- PANELBOARD
- ROTATING BEACON
- HORN
- DUPLEX RECEPTACLE
- DRIVE INVERTER

ABBREVIATIONS

AFF	ABOVE FINISHED FLOOR/DECK
AFG	ABOVE FINISHED GRADE
CU	COPPER
EA	EACH
GFI	GROUND FAULT CIRCUIT INTERRUPTER
GND	GROUND
GRS	GALVANIZED RIGID STEEL
HDG	HOT-DIPPED GALVANIZED
HOA	HAND-OFF-AUTO CONTROL SWITCH
J-BOX	JUNCTION BOX
LC	LIGHTING CONTACTOR
LFMC	LIQUIDTIGHT FLEXIBLE METAL CONDUIT
MLO	MAIN LUGS ONLY
PEC	PHOTO ELECTRIC CELL
PVC	POLYVINYL CHLORIDE CONDUIT
RSC	RIGID STEEL GALVANIZED CONDUIT
SS	STAINLESS STEEL
TYP	TYPICAL
UON	UNLESS OTHERWISE NOTED
WP	WEATHERPROOF
XFMR	TRANSFORMER

NOTES:

1. Scope of Work: Provide new power, lighting and control systems for renovation of Marine Facility. Provide spare communication conduit from shore to float for future installation.
2. Electrical Datum Plane is +21.0 Feet.

Site Plan

20 10 0 20 40
SCALE IN FEET

DO NOT SCALE FROM THESE DRAWINGS USE DIMENSIONS

CHECKED BY: M.A. Hansen

STATE OF ALASKA 49th Maureen A. Hansen EE-9050 REGISTERED PROFESSIONAL ENGINEER
3/17/10

DESIGNED BY: M.A. Hansen
DRAWN BY: R. Grantham

STATE OF ALASKA
DEPARTMENT OF TRANSPORTATION
& PUBLIC FACILITIES
DESIGN & ENGINEERING SERVICES DIVISION-SOUTHEAST REGION

Angoon Ferry Terminal Improvements, Re-Bid

Electrical Site Plan & Legend

PATH: Q:\ANG\68502\MF\PLANSET\09 ELECTRICAL\RE BID MAR2010\E1 ELECTRICAL SITE PLAN (REBID).DWG
TAB: E1
HANSEN, MAUREEN A (DOT)

REVISIONS			PROJECT DESIGNATION	YEAR	SHEET NO.	TOTAL SHEETS
NO.	DATE	DESCRIPTION	68502	2010	E1	72

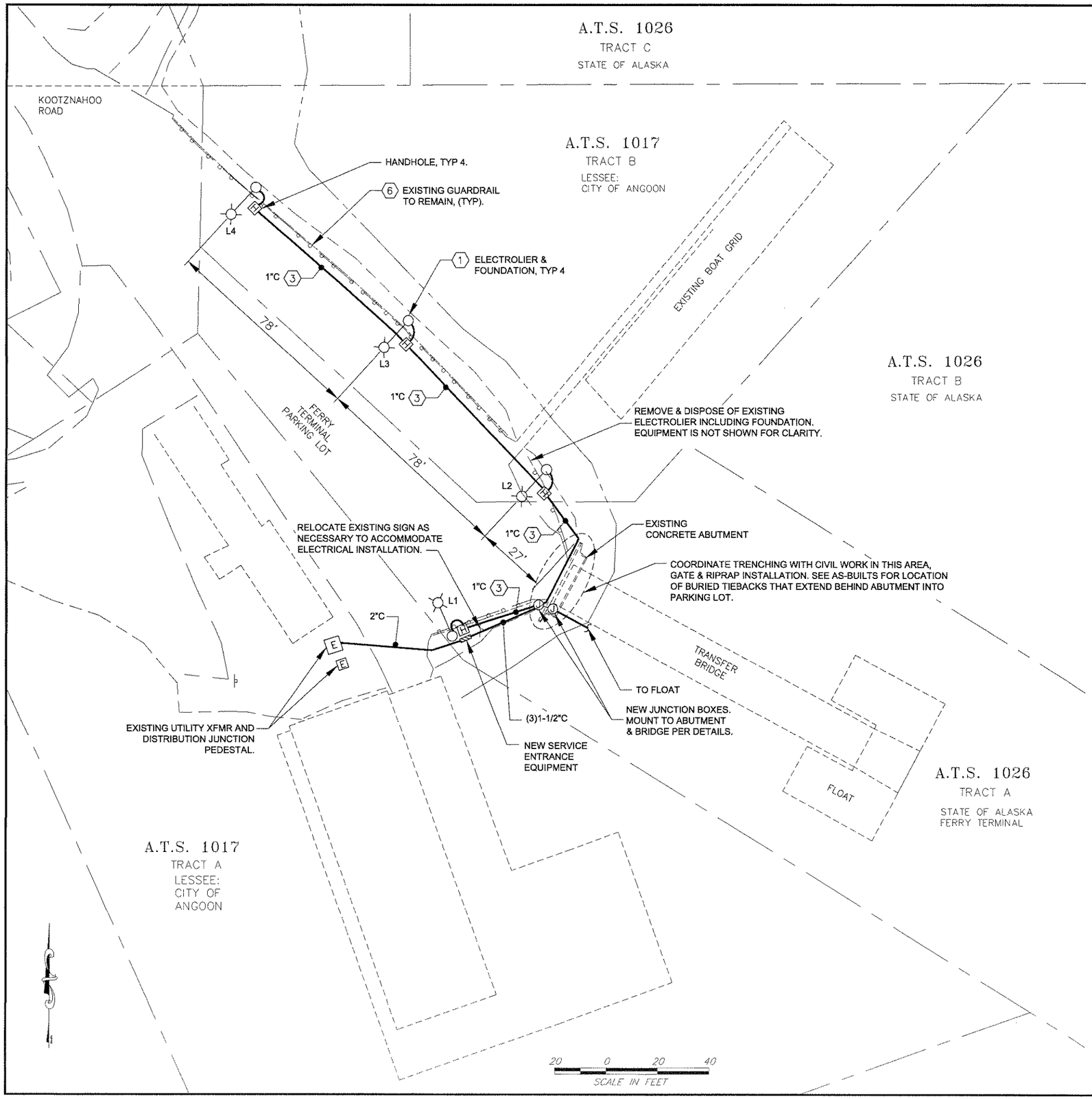

WRITTEN AUTHORIZATION FROM THE ENGINEER IS REQUIRED PRIOR TO EXCAVATION IN UPLANDS.

NOTES:

1. ELECTROLIERS ON THIS SHEET SHALL INCLUDE THE FOLLOWING COMPONENTS: 25 FOOT TAPERED STEEL POLE WITH HANDHOLE, 4 FOOT MAST ARM, PRE-CAST FOUNDATION, AND COBRAHEAD STYLE LUMINAIRE.
2. ALL ELECTRICAL CONNECTIONS SHALL BE LOCATED ABOVE THE ELECTRICAL DATUM PLANE.
3. INSTALL CONDUIT PARALLEL TO GUARDRAIL. MAXIMUM SEPARATION BETWEEN CONDUIT AND GUARDRAIL SHALL NOT EXCEED 48 INCHES.
4. CONDUIT SIZES SHOWN ARE MINIMUM ACCEPTABLE SIZES. UTILIZE RIGID STEEL FOR UNDERGROUND CONDUIT UON. ALL ELBOWS SHALL BE RIGID STEEL. UTILIZE RIGID STEEL FOR EXPOSED CONDUIT.
5. SEE SHEETS E8 AND E9 FOR UPLANDS DETAILS.
6. REMOVE, SALVAGE, REPAIR AND/OR REPLACE SECTIONS OF METAL BEAM GUARD AS MAYBE REQUIRED TO FACILITATE WORK.
7. PLACE NEW ELECTRICAL FEATURES AS GENERALLY SHOWN ON PLAN. COORDINATE FINAL LOCATIONS WITH ENGINEER PRIOR TO START OF ANY WORK OR EXCAVATION.
8. CONTRACTOR TO COORDINATE NEW SERVICE INSTALLATION DIRECTLY WITH LOCAL UTILITY, INSIDE PASSAGE ELECTRICAL COOPERATIVE, ATTN: PETE BIBB.

PROPERTY BOUNDARIES

DO NOT SCALE FROM THESE DRAWINGS USE DIMENSIONS

CHECKED BY: M.A. Hansen

STATE OF ALASKA 49th Maureen A. Hansen EE-9050 REGISTERED PROFESSIONAL ENGINEER 3/17/10

DESIGNED BY: M.A. Hansen
DRAWN BY: MAH

STATE OF ALASKA
DEPARTMENT OF TRANSPORTATION & PUBLIC FACILITIES
DESIGN & ENGINEERING SERVICES DIVISION-SOUTHEAST REGION

Angoon Ferry Terminal Improvements, Re-Bid

Uplands Power & Lighting Site Plan

PATH: Q:\ANG\68502\MF\PLANSET\09 ELECTRICAL\RE BID MAR2010\E2 UPLANDS (REBID).DWG
TAB: E2
HANSEN, MAUREEN A (DOT)

REVISIONS			PROJECT DESIGNATION	YEAR	SHEET NO.	TOTAL SHEETS
NO.	DATE	DESCRIPTION	68502	2010	E2	72

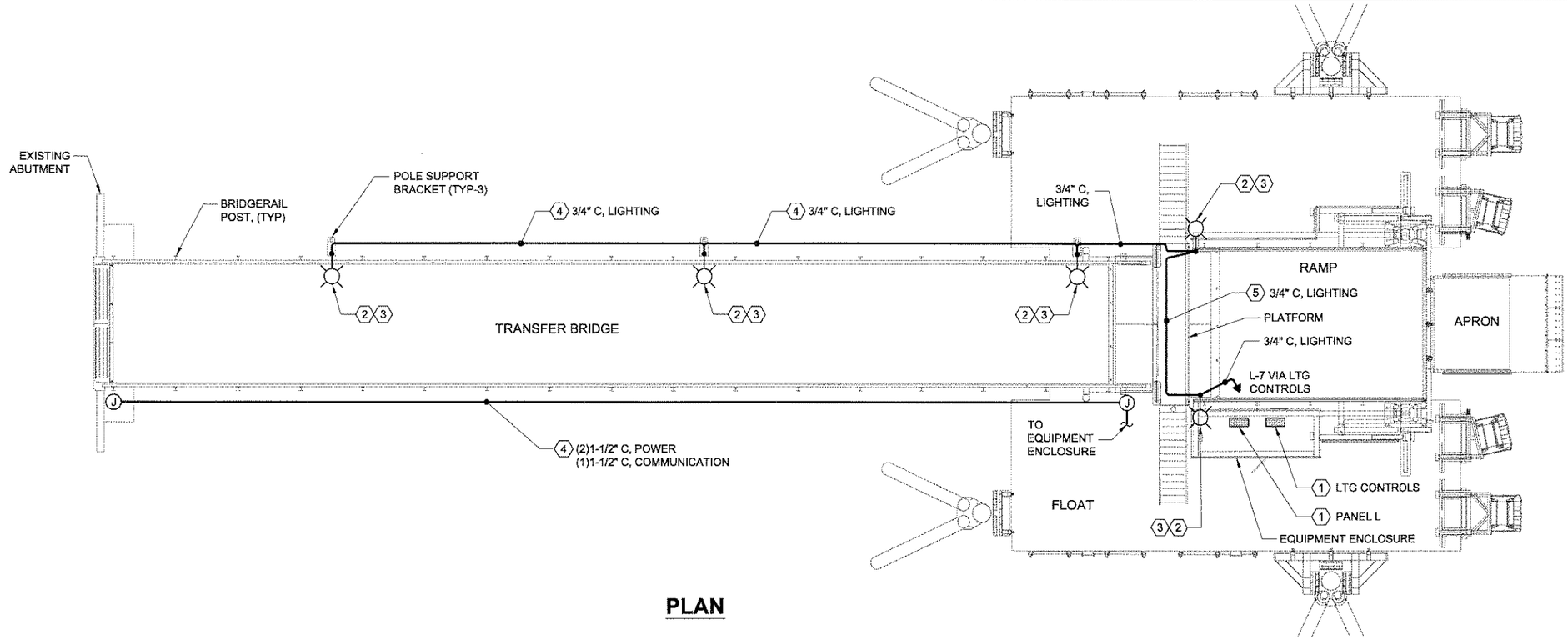

PLAN

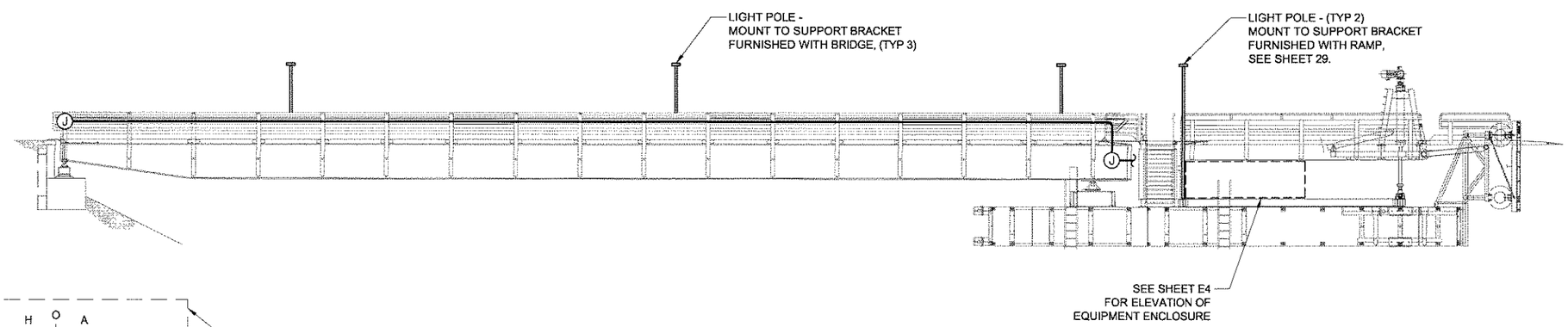

ELEVATION

NOTE: FLOAT RESTRAINT PILES & FENCING NOT SHOWN FOR CLARITY.

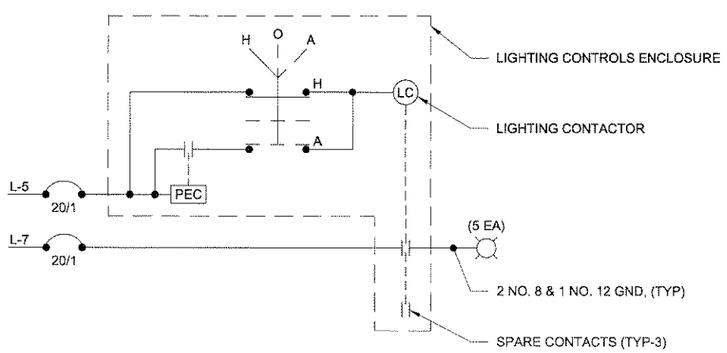

LIGHTING SCHEMATIC

NOTES:

1. SEE EQUIPMENT LAYOUT ON SHEET E4, FLOAT POWER PLAN FOR ACTUAL LOCATIONS.
2. ELECTROLIERS ON THIS SHEET SHALL INCLUDE THE FOLLOWING COMPONENTS: 15 FOOT SQUARE STEEL POLE, 4" WITH HANDHOLE, LUMINAIRE AND SEAGULL RATED BIRD BARRIER SPIKE STRIPS ON POLE & LUMINAIRE. COORDINATE POLE FINISH AND DRILLING PATTERN WITH THE LUMINAIRE.
3. LUMINAIRE SHALL BE 175W MH, TYPE II DISTRIBUTION, 208V, CORROSION RESISTANT FINISH MATCHING POLE. DESIGN IS BASED ON LITHONIA MODEL ASI 175M SR2 HS OR APPROVED EQUAL.
4. PROVIDE GRS CONDUIT. SECURE TO STRUT ON BRIDGE RAIL POSTS. PROVIDE EXPANSION FITTINGS AT SPACING OF 75 FEET, MAXIMUM .
5. INSTALL CONDUIT UNDERNEATH PLATFORM ON STRUT FURNISHED WITH PLATFORM.

DO NOT SCALE FROM THESE DRAWINGS USE DIMENSIONS

CHECKED BY: M.A. Hansen

STATE OF ALASKA 49th Maureen A. Hansen EE-9050 REGISTERED PROFESSIONAL ENGINEER 3/17/10

DESIGNED BY: M.A. Hansen

DRAWN BY: R. Grantham

STATE OF ALASKA
DEPARTMENT OF TRANSPORTATION
& PUBLIC FACILITIES
DESIGN & ENGINEERING SERVICES DIVISION-SOUTHEAST REGION

Angoon Ferry Terminal Improvements, Re-Bid

Transfer Bridge Power & Lighting Plan & Profile

PATH: Q:\ANG\68502\MF\PLANSET\09 ELECTRICAL\RE BID MAR2010\E3 TRANS BRG PWR-LTG P&P (REBID).DWG
TAB: E3
HANSEN, MAUREEN A (DOT)

REVISIONS			PROJECT DESIGNATION	YEAR	SHEET NO.	TOTAL SHEETS
NO.	DATE	DESCRIPTION	68502	2010	E3	72

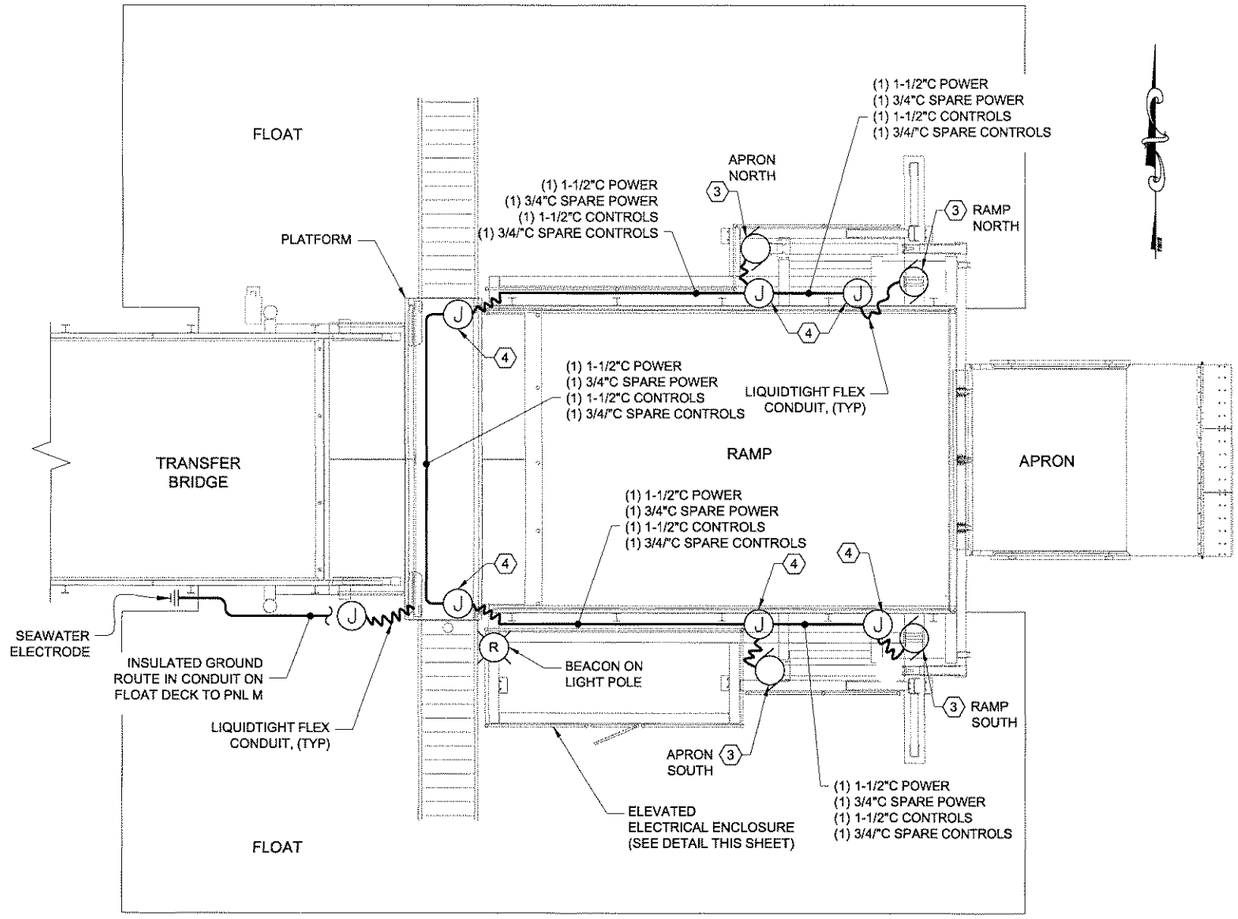

PLAN

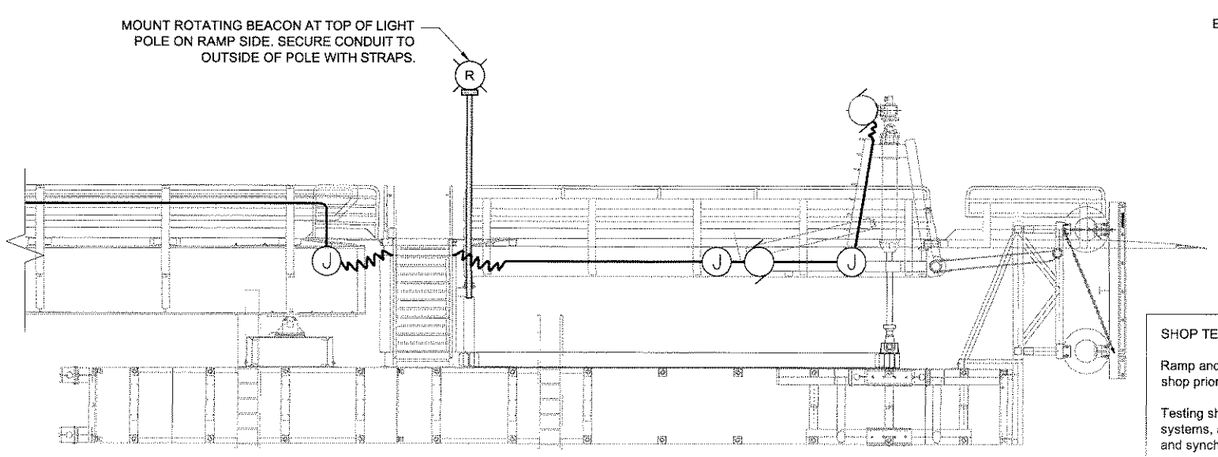

ELEVATION

NOTES:

1. ALL ELECTRICAL CONNECTIONS ON FLOAT SHALL BE LOCATED A MINIMUM 12 INCHES ABOVE FLOAT DECK.
2. LIGHTING SYSTEM COMPONENTS ARE SHOWN ON SHEET E3.
3. PROVIDE MANUAL NON-FUSED DISCONNECT AT MOTOR PER NEC OR RACO MOTOR QUICK CONNECTOR COORDINATED WITH MOTORS FURNISHED WITH RAMP & APRON EQUIPMENT.
4. PROVIDE NEMA 4X.SS WITH BARRIER SEPARATION BETWEEN POWER & CONTROLS OR PROVIDE SEPARATE JUNCTION BOXES FOR EACH. SIZE PER NEC.
5. CONDUIT MAY BE ROUTED UNDER GRATING. FIELD CUT GRATING OPENINGS AS REQUIRED. SEE SHEET 30 FOR LIMITS. PENETRATIONS IN FLOAT DECK ARE NOT ALLOWED.
6. CONDUITS SHOWN IN ELEVATIONS ARE NOT REPRESENTATIVE OF THE ACTUAL QUANTITY REQUIRED FOR INSTALLATION.
7. PROP WASH IS EXPECTED TO FLOW UNDERNEATH ELECTRICAL ENCLOSURE DECK. SECURE ALL CONDUIT FITTINGS AND ENCLOSURE PENETRATIONS TO PREVENT ENTRANCE OF MOISTURE.
8. A SINGLE CABINET HAS BEEN SHOWN FOR BIDDING PURPOSES. THE USE OF MULTIPLE CABINETS TO HOUSE CONTROLS COMPONENTS IS ACCEPTABLE.

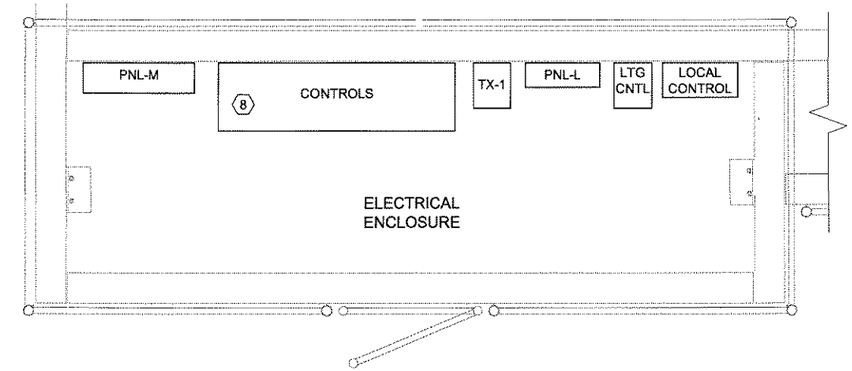

PLAN

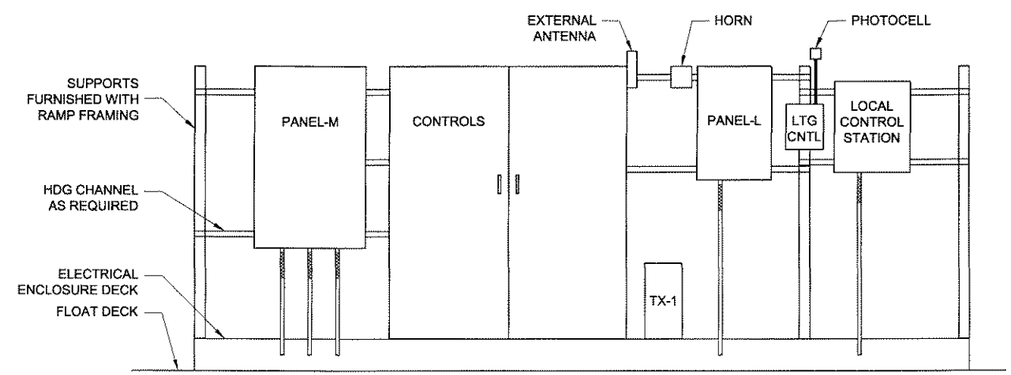

ELEVATION

ELECTRICAL ENCLOSURE DETAIL

SHOP TESTING:

Ramp and apron components shall be substantially assembled and tested in the shop prior to installation in the field.

Testing shall verify the operation and full range of motion of the ramp and apron lift systems, and will require installation of the electric cylinders, electrical power, control and synchronization electronics, and local/remote control systems.

Deficiencies shall be corrected prior to being shipped to the field.

DO NOT SCALE FROM THESE DRAWINGS USE DIMENSIONS

CHECKED BY: M.A. Hansen

STATE OF ALASKA 49th Maureen A. Hansen E5-9050 REGISTERED PROFESSIONAL ENGINEER 3/17/10

DESIGNED BY: M.A. Hansen
DRAWN BY: R. Grantham

STATE OF ALASKA
DEPARTMENT OF TRANSPORTATION & PUBLIC FACILITIES
DESIGN & ENGINEERING SERVICES DIVISION-SOUTHEAST REGION

Angoon Ferry Terminal Improvements, Re-Bid

Float Power & Lighting Plan & Elevations

PATH: Q:\ANG\68502\MF\PLANSET\09 ELECTRICAL\RE BID MAR2010\E4 FLOAT POWER & LIGNTING PLAN (REBID).DW
TAB: E4
HANSEN, MAUREEN A (DOT)

REVISIONS			PROJECT DESIGNATION	YEAR	SHEET NO.	TOTAL SHEETS
NO.	DATE	DESCRIPTION	68502	2010	E4	72

* PANEL S

SIZE	VOLTS/PHASE	MAIN	LOCATION	MOUNT
150 AMPS	480/277V, 3 PH	150/3	UPLANDS	SURFACE

CKT NO	DESCRIPTION	BREAKER AMP/ POLE	KVA CKT	AØ	BØ	CØ	CKT	BREAKER AMP/ POLE	DESCRIPTION	CKT NO
1	UPLAND LIGHTING	15/1	0.8	19.3			18.5	110/3	PANEL M	2
3	SPARE	30/2	0.0		19.2		19.2	--	--	4
5	--	--	0.0			18.7	18.7	--	--	6
7	SPACE	--	0.0	0.0			0.0	--	SPACE	8
9	SPACE	--	0.0		0.0		0.0	--	SPACE	10
11	SPACE	--	0.0			0.0	0.0	--	SPACE	12
13	SPACE	--	0.0	0.0			0.0	--	SPACE	14
15	SPACE	--	0.0		0.0		0.0	--	SPACE	16
17	SPACE	--	0.0			0.0	0.0	--	SPACE	18
BALANCED CONNECTED LOAD = 57.2 KVA / 69 AMPS				19.3	19.2	18.7				
MAXIMUM CONNECTED LOAD = 57.2 KVA / 70 AMPS										

* RATED AS SERVICE ENTRANCE EQUIPMENT

PANEL M

SIZE	VOLTS/PHASE	MAIN	LOCATION	MOUNT
150 AMPS	480/277V, 3 PH	LUGS ONLY	FLOAT	SURFACE

CKT NO	DESCRIPTION	BREAKER AMP/ POLE	KVA CKT	AØ	BØ	CØ	CKT	BREAKER AMP/ POLE	DESCRIPTION	CKT NO
1	APRON NORTH MOTOR	15/3	1.7	3.4			1.7	15/3	APRON SOUTH MOTOR	2
3	--	--	1.7		3.4		1.7	--	--	4
5	--	--	1.7			3.4	1.7	--	--	6
7	RAMP NORTH MOTOR	50/3	6.7	13.4			6.7	50/3	RAMP SOUTH MOTOR	8
9	--	--	6.7		13.4		6.7	--	--	10
11	--	--	6.7			13.4	6.7	--	--	12
13	RAMP NORTH MOTOR BRAKE	20/2	0.1	1.4			1.3	30/3	TRANSFORMER TX-1	14
15	--	--	0.1		2.3		2.2	--	--	16
17	APRON NORTH MOTOR BRAKE	20/2	0.1			1.8	1.7	--	--	18
19	--	--	0.1	0.2			0.1	20/2	RAMP SOUTH MOTOR BRAKE	20
21	SPARE	20/1	0.0		0.1		0.1	--	--	22
23	SPACE	--	0.0			0.1	0.1	20/2	APRON SOUTH MOTOR BRAKE	24
25	SPACE	--	0.0	0.1			0.1	--	--	26
27	SPACE	--	0.0		0.0		0.0	--	SPACE	28
29	SPACE	--	0.0			0.0	0.0	--	SPACE	30
BALANCED CONNECTED LOAD = 56.4 KVA / 68 AMPS				18.5	19.2	18.7				
MAXIMUM CONNECTED LOAD = 56.4 KVA / 69 AMPS										

PANEL L

SIZE	VOLTS/PHASE	MAIN	LOCATION	MOUNT
100 AMPS	208/120V, 3 PH	LUGS ONLY	FLOAT	SURFACE

CKT NO	DESCRIPTION	BREAKER AMP/ POLE	KVA CKT	AØ	BØ	CØ	CKT	BREAKER AMP/ POLE	DESCRIPTION	CKT NO
1	ROTATING BEACON	20/1	0.2	0.4			0.2	20/1	REMOTE TRANSMITTER	2
3	HORN	20/1	0.2		2.2		2.0	20/1	UPS FOR PLC	4
5	LIGHTING CONTROLS	20/1	0.2			0.2	0.0	20/1	SPARE	6
7	MARINE LIGHTING	20/1	0.9	0.9			0.0	--	SPACE	8
9	SPARE	20/1	0.0		0.0		0.0	--	SPACE	10
11	SPACE	--	0.0			1.5	1.5	20/1	HEATER IN PLC	12
13	SPACE	--	0.0	0.0			0.0	--	SPACE	14
15	SPACE	--	0.0		0.0		0.0	--	SPACE	16
17	SPACE	--	0.0			0.0	0.0	--	SPACE	18
BALANCED CONNECTED LOAD = 5.2 KVA / 14 AMPS				1.3	2.2	1.7				
MAXIMUM CONNECTED LOAD = 5.2 KVA / 18 AMPS										

FLASH HAZARD

LOCATION	BOUNDARY	cal/cm^2 @18"	PPE LEVEL
PANEL S	15.9 INCHES	1.2	#1
PANEL M	5.30 INCHES	0.2	#0
PANEL L	48.9 INCHES	6.2	#2

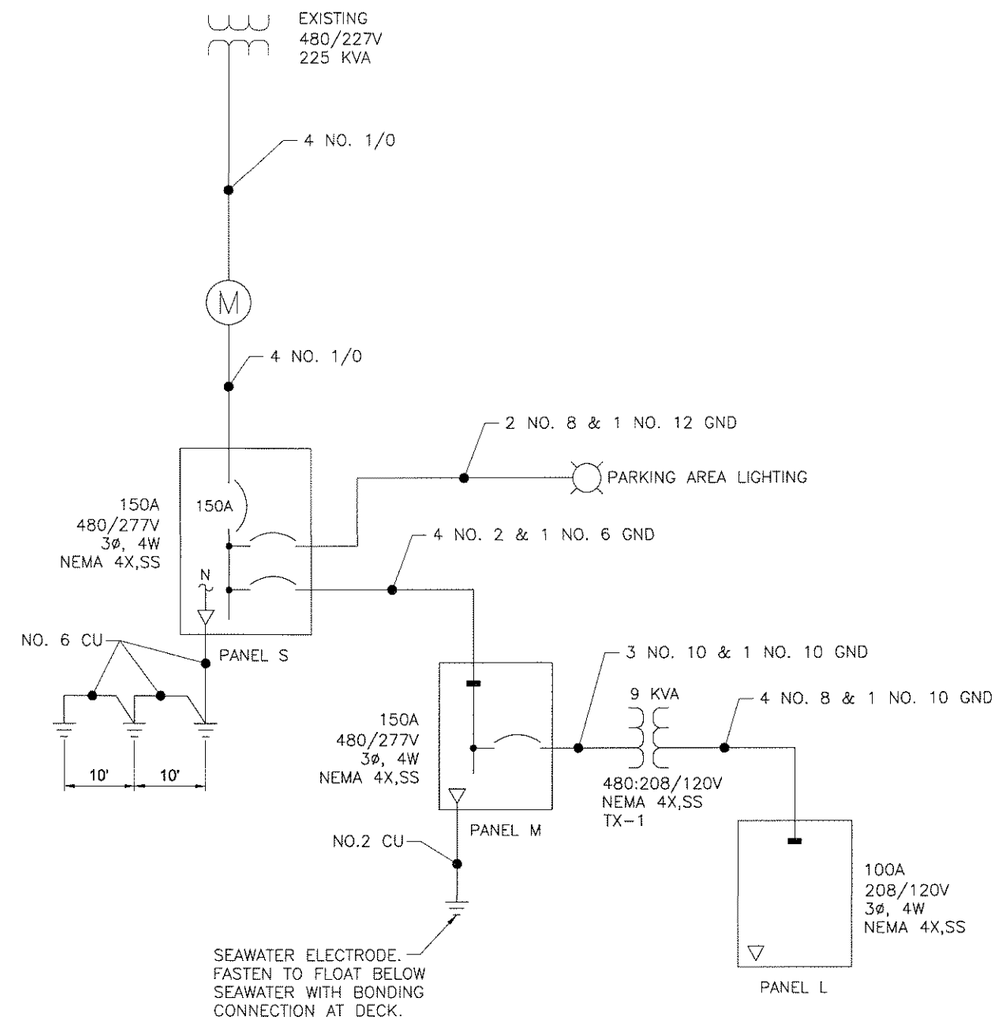

NOTE:
ESTIMATED AVAILABLE FAULT CURRENT AT PANEL S IS 38909 AMPS.

SINGLE LINE DIAGRAM
NO SCALE

DO NOT SCALE FROM THESE DRAWINGS USE DIMENSIONS

CHECKED BY: M.A. Hansen
STATE OF ALASKA 49th Maureen A. Hansen EE-9050 REGISTERED PROFESSIONAL ENGINEER
3/17/10
DESIGNED BY: M.A. Hansen
DRAWN BY: R. Grantham

STATE OF ALASKA
DEPARTMENT OF TRANSPORTATION
& PUBLIC FACILITIES
DESIGN & ENGINEERING SERVICES DIVISION-SOUTHEAST REGION

Angoon Ferry Terminal
Improvements, Re-Bid

Single Line &
Panel Schedules

PATH: Q:\ANG\68502\MF\PLANSET\09 ELECTRICAL\RE BID MAR2010\E5 SINGLE LINE PANEL SCHED (REBID).DWG
TAB: E5
HANSEN, MAUREEN A (DOT)

REVISIONS NO.	DATE	DESCRIPTION	PROJECT DESIGNATION	YEAR	SHEET NO.	TOTAL SHEETS
			68502	2010	E5	72

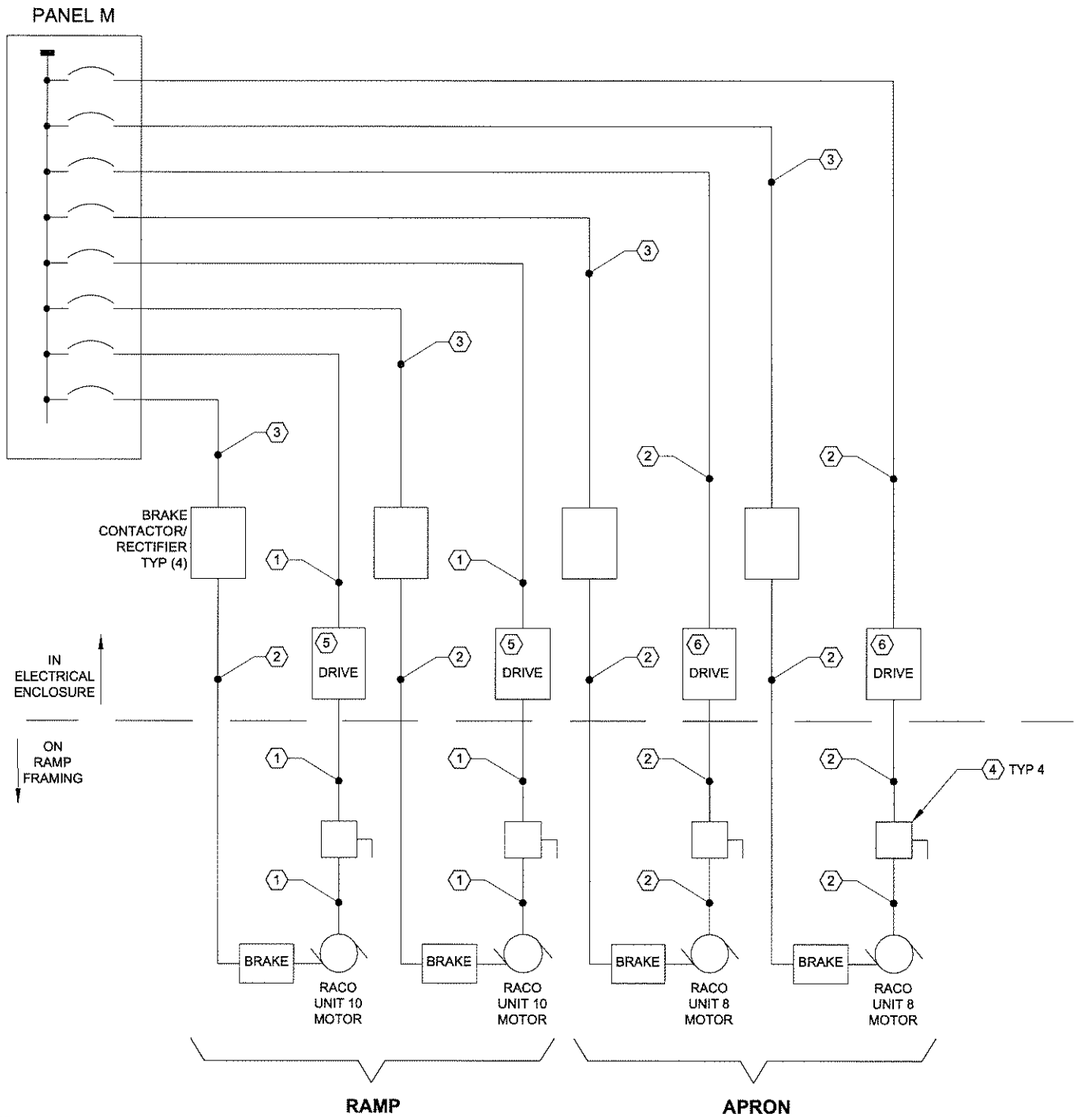

480V SCHEMATIC

NOTES:

1. 3 NO. 8 & 1 NO. 10 GND
2. 3 NO. 12 & 1 NO. 12 GND
3. 2 NO. 12 & 1 NO. 12 GND
4. LOCATE NEMA 4X MOTOR DISCONNECT WITHIN SIGHT OF MOTOR. PROVIDE RACO MOTOR QUICK CONNECTOR OR NON-FUSED DISCONNECT SWITCH.
5. VECTOR DRIVE FURNISHED WITH RAMP & APRON LIFT SYSTEMS. RATED FOR 480V, 3 PHASE, 15KW, NEMA 4X INDOOR/OUTDOOR, AND DEVICENET COMMUNICATION.
6. VECTOR DRIVE FURNISHED WITH RAMP & APRON LIFT SYSTEMS. RATED FOR 480V, 3 PHASE, 5.5KW, NEMA 4X INDOOR/OUTDOOR, AND DEVICENET COMMUNICATION.

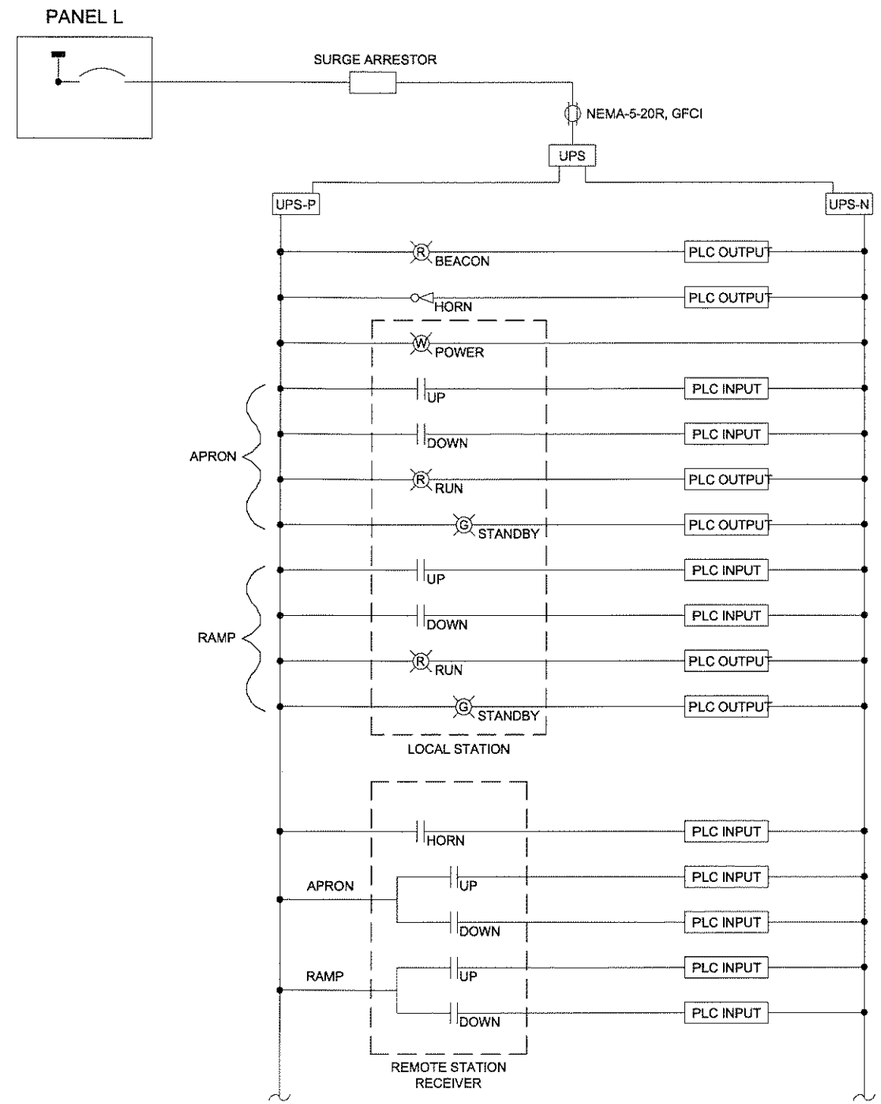

CONTROL SCHEMATIC

DO NOT SCALE FROM THESE DRAWINGS USE DIMENSIONS

CHECKED BY: M.A. Hansen	STATE OF ALASKA DEPARTMENT OF TRANSPORTATION & PUBLIC FACILITIES DESIGN & ENGINEERING SERVICES DIVISION-SOUTHEAST REGION
STATE OF ALASKA 49th Maureen A. Hansen EE-9050 REGISTERED PROFESSIONAL ENGINEER 3/17/10	Angoon Ferry Terminal Improvements, Re-Bid
DESIGNED BY: M.A. Hansen	**Power & Control Schematics**
DRAWN BY: R. Grantham	

PATH: Q:\ANG\68502\MF\PLANSET\09 ELECTRICAL\RE BID MAR2010\E6 POWER & CONTROL SCHEMATICS (REBID).D
TAB: E6 HANSEN, MAUREEN A (DOT)

REVISIONS			PROJECT DESIGNATION	YEAR	SHEET NO.	TOTAL SHEETS
NO.	DATE	DESCRIPTION	68502	2010	E6	72

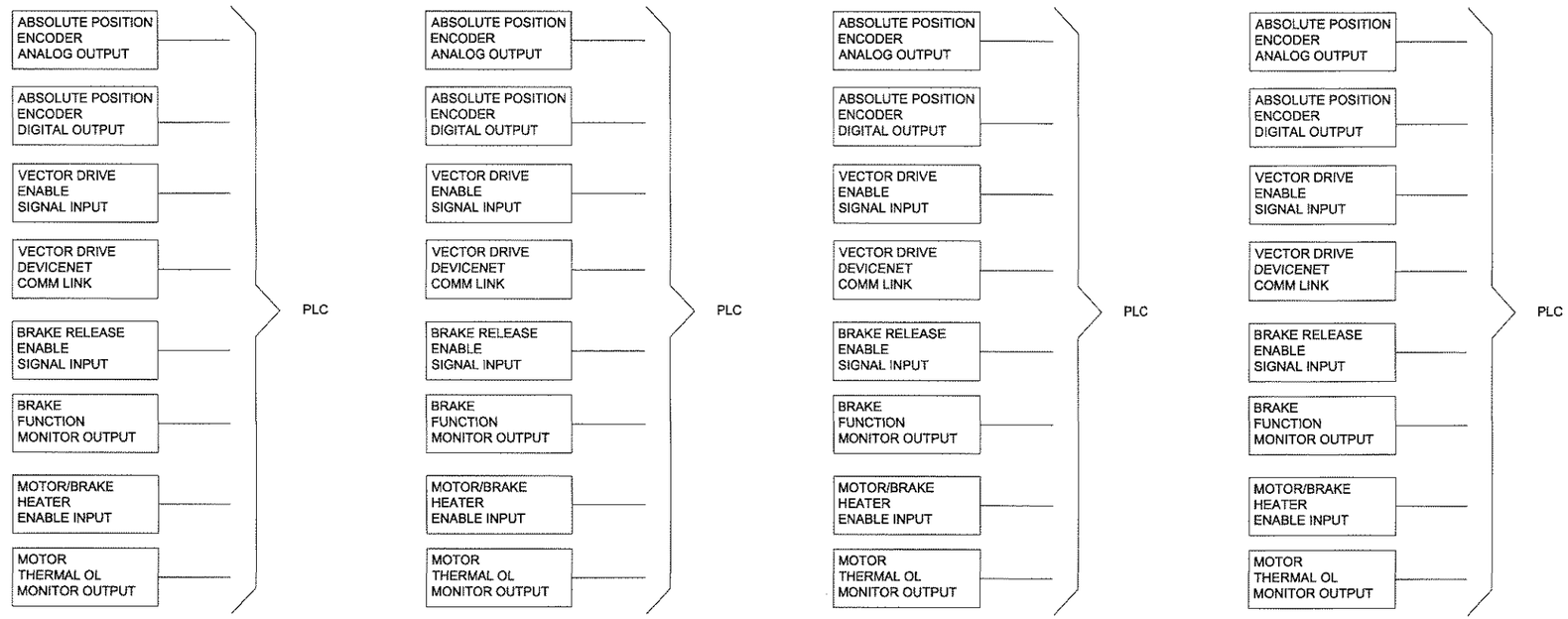

APRON SOUTH **APRON NORTH** **RAMP SOUTH** **RAMP NORTH**

NOTES:

1. THE MINIMUM NUMBER OF INPUT/OUTPUT SIGNALS TO PLC HAS BEEN ILLUSTRATED. ADDITIONAL INPUT/OUTPUT MAY BE REQUIRED IN FINAL PROGRAM TO PROVIDE FOR FUNCTIONAL LIFT SYSTEMS WITH MONITORING.
2. FEEDBACK SIGNALS FOR VARIOUS COMPONENTS OF THE LIFT SYSTEMS HAVE BEEN MINIMALLY DEFINED IF AT ALL TO ALLOW FOR FLEXIBILITY AND CREATIVITY IN THE PROGRAMMING SOLUTION.

DO NOT SCALE FROM THESE DRAWINGS USE DIMENSIONS

CHECKED BY: M.A. Hansen

STATE OF ALASKA 49th Maureen A. Hansen EE-9060 REGISTERED PROFESSIONAL ENGINEER 3/17/10

DESIGNED BY: M.A. Hansen

DRAWN BY: R. Grantham

STATE OF ALASKA
DEPARTMENT OF TRANSPORTATION
& PUBLIC FACILITIES
DESIGN & ENGINEERING SERVICES DIVISION-SOUTHEAST REGION

Angoon Ferry Terminal
Improvements, Re-Bid

Control Schematics

PATH: Q:\ANG\68502\MF\PLANSET\09 ELECTRICAL\RE BID MAR2010\E7 CONTROL SCHEMATICS (REBID).DWG
TAB: E7
HANSEN, MAUREEN A (DOT)

REVISIONS			PROJECT DESIGNATION	YEAR	SHEET NO.	TOTAL SHEETS
NO.	DATE	DESCRIPTION	68502	2010	E7	72

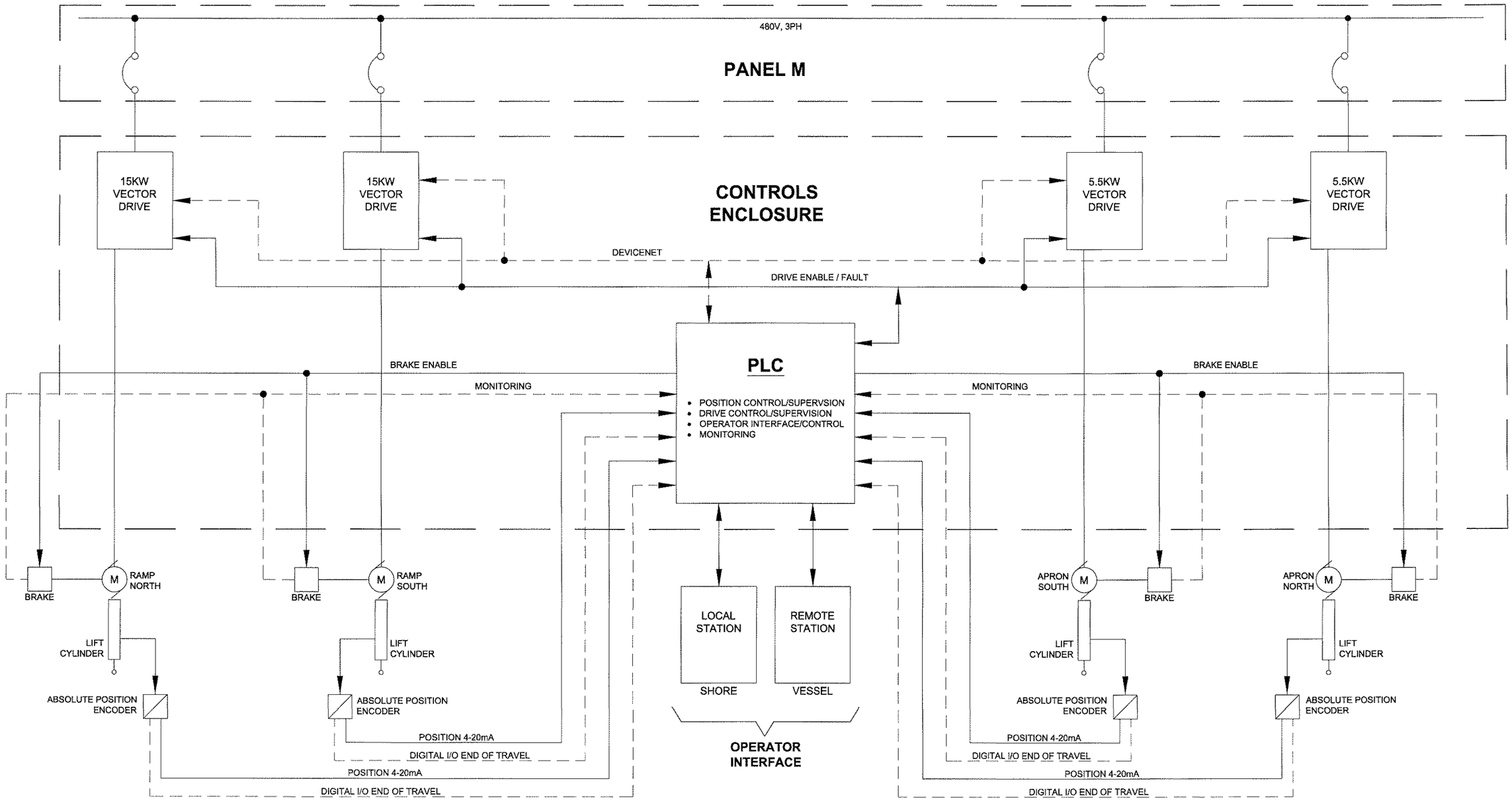

NOTES:

1. THE FOLLOWING EQUIPMENT IS INCLUDED IN BID ITEM 504(4): LIFT CYLINDERS, MOTORS WITH BRAKES, ABSOLUTE POSITION ENCODERS, AND VECTOR DRIVES WITH DRIVE SOFTWARE.
2. PLC SHALL ACCOMMODATE AT A MINIMUM COMMUNICATION FORMAT: DEVICENET.
3. PLC SHALL HAVE CAPABILITY FOR FUTURE CONNECTION TO TELEPHONE SYSTEM TO ALLOW REMOTE SUPERVISION/OPERATION OF FACILITY.
4. APRON OPERATION:

   A. STORED POSITION IS "UP": LIFT CYLINDER AT FULLY RETRACTED END OF TRAVEL.
   B. OPERATING POSITION IS "DOWN": LIFT CYLINDER AT FULLY EXTENDED END OF TRAVEL.
   C. 'END OF TRAVEL' SIGNAL CANCELS FURTHER REMOTE OR LOCAL STATION SIGNALS IN THAT TRAVEL DIRECTION AND TURNS OFF MOTOR.

5. RAMP OPERATION:

A. STORED POSITION IS "DOWN": LIFT CYLINDER AT FULLY RETRACTED END OF TRAVEL
B. OPERATING POSITION IS "UP": LIFT CYLINDER AT FULLY EXTENDED END OF TRAVEL.
C. 'END OF TRAVEL' SIGNAL CANCELS FURTHER REMOTE OR LOCAL STATION SIGNALS IN THAT TRAVEL DIRECTION AND TURNS OFF MOTOR.

6. NORTH & SOUTH MOTOR PAIR FOR EITHER RAMP OR APRON LIFT SYSTEM SHALL PROVIDE SYNCHRONOUS OPERATION OF THE CYLINDERS. THE MAXIMUM DIFFERENTIAL BETWEEN STROKE EXTENSION OF PAIRED NORTH AND SOUTH CYLINDERS SHALL NOT EXCEED ONE INCH.
7. BRAKE FUNCTIONS SHALL SUPPORT THE SYNCHRONOUS OPERATION OF A MOTOR PAIR AND PROVIDE SAFETY BACKUP IN CASE OF OTHER SYSTEM COMPONENT FAILURE. COORDINATE MINIMUM REQUIRED FUNCTIONS PER THE LIFT SYSTEM MANUFACTURER.
8. LOCAL STATION CONTROL SIGNALS ARE PRIMARY AND SHALL TAKE PRECEDENCE OVER REMOTE STATION CONTROL SIGNALS.
9. SYSTEM STATUS, MONITORING AND PROGRAMMING FUNCTIONS SHALL BE ACCESSIBLE VIA THE PLC OPERATOR INTERFACE FOR MAINTENANCE PURPOSES ONLY.
10. PLC FUNCTIONS ARE OUTLINED IN THE DRAWINGS ON A PERFORMANCE BASIS. SUBMIT PROGRAM SCHEMATIC OUTLINE OF ALL CONTROL AND MONITORING FUNCTIONS FOR APPROVAL BY THE ENGINEER PRIOR TO PROGRAMMING PLC UNIT.

DO NOT SCALE FROM THESE DRAWINGS USE DIMENSIONS

CHECKED BY: M.A. Hansen

STATE OF ALASKA 49th Maureen A. Hansen EE-9050 REGISTERED PROFESSIONAL ENGINEER 3/17/10

DESIGNED BY: M.A. Hansen
DRAWN BY: R. Grantham

STATE OF ALASKA
DEPARTMENT OF TRANSPORTATION
& PUBLIC FACILITIES
DESIGN & ENGINEERING SERVICES DIVISION-SOUTHEAST REGION

Angoon Ferry Terminal Improvements, Re-Bid

Synchronized Motor Function Control Diagram

PATH: Q:\ANG\68502\MF\PLANSET\09 ELECTRICAL\RE BID MAR2010\E8 FUNCTION CONTROL DIAGRAM (REBID).DWG
TAB: E8
HANSEN, MAUREEN A (DOT)

REVISIONS			PROJECT DESIGNATION	YEAR	SHEET NO.	TOTAL SHEETS
NO.	DATE	DESCRIPTION	68502	2010	E8	72

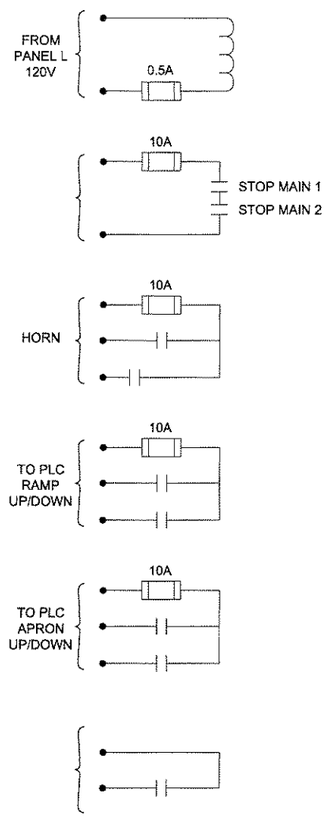

RECEIVER SCHEMATIC

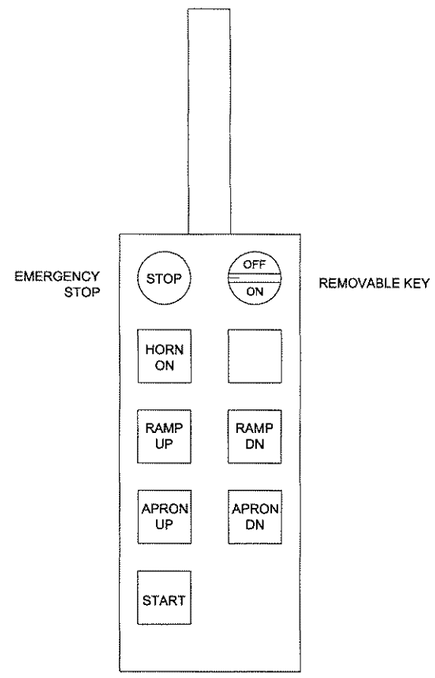

TRANSMITTER

NOTES:

1. PROVIDE A RADIO FREQUENCY REMOTE CONTROL SYSTEM WITH FIVE TRANSMITTERS, ONE RECEIVER AND ONE EXTERNAL ANTENNA KIT.
2. RADIO CONTROL SYSTEM SHALL HAVE 120V CONTROL POWER, 1000 FT. MINIMUM OPERATING RANGE, WIRELESS TRANSMITTER WITH REMOVABLE ON/OFF KEY, & INTERLOCKED UP/DOWN BUTTONS. DESIGN IS BASED ON INTERCONTINENTAL TECHNOLOGIES LTD, MODEL F24-6S OR APPROVED EQUAL.
3. RECEIVER SHALL BE LOCATED ON FLOAT IN ELECTRICAL ENCLOSURE.
4. TRANSMITTER (HANDHELD REMOTE) SHALL BE LOCATED ON VESSEL.

REMOTE STATION

CONTROL OPERATION REQUIREMENTS

1. HUMAN INTERFACE OPERATIONS SHALL BE PROVIDED BY BOTH LOCAL STATION ON SHORE AND REMOTE STATION ON VESSEL.
2. HORN "ON" BUTTON SHALL ACTIVATE AS WARNING TO ANYONE ON FLOAT. HORN ACTIVATION TIME PERIOD SHALL HAVE A RANGE ADJUSTABLE FROM 5-30 SECONDS. INITIAL SETTING SHALL BE 10 SECONDS.
3. WHEN RAMP OR APRON MOTORS ARE RUNNING, PROVIDE BOTH AUDIBLE AND VISUAL RUN SIGNALS. AUDIBLE SIGNAL SHALL BE DISTINCTLY DIFFERENT THAN THE WARNING HORN SOUND. VISUAL SIGNAL SHALL BE ILLUMINATION OF BOTH THE FLASHING BEACON AND THE LOCAL STATION "RUN" INDICATING LIGHT.
4. "STDBY" INDICATING LIGHT SHALL ILLUMINATE WHEN MOTOR IS AVAILABLE WITH SYSTEM POWER AND NO SYNC ERRORS.

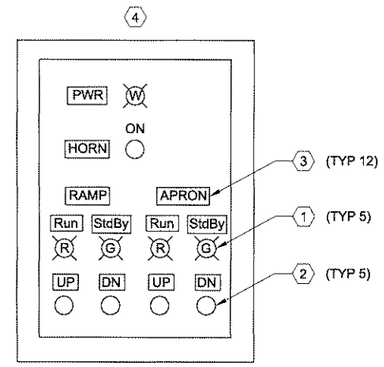

1. PROVIDE CORROSION RESISTANT NEMA 4X 30MM PUSH-TO-TEST INDICATING LIGHTS. PROVIDE LED LAMPS WITH THE COLOR AS SHOWN. PROVIDE SQUARE D TYPE SK CLASS 9001 INDICATING LIGHTS WITH CLEAR PROTECTIVE BOOTS.
2. PROVIDE CORROSION RESISTANT NEMA 4X 30MM PUSH BUTTON WITH CLEAR PROTECTIVE BOOTS. PROVIDE SQUARE D TYPE SK CLASS 9001 PUSH BUTTONS.
3. PROVIDE ENGRAVED PHENOLIC NAMEPLATES, WHITE LETTERING, 3/4" HIGH ON BLACK BACKGROUND.
4. NEMA 4X TYPE 316L STAINLESS STEEL ENCLOSURE WITH PADLOCKABLE DOOR AND INNER DEAD FRONT PANEL WITH CONTROLS. INSTALL OPERATING INSTRUCTION PLACARD ON INSIDE OF ENCLOSURE DOOR. MOUNT ENCLOSURE TO PROVIDED SUPPORT STRUCTURE. SEE SHEET E4.

3

ANGOON OPERATING INSTRUCTIONS - FWX

0. ACTIVATE REMOTE TRANSMITTER.
1. SOUND HORN "ON"
2. ADJUST RAMP "UP" UNTIL FLASHING BEACON TURNS OFF.
3. LOWER APRON "DOWN" UNTIL FLASHING BEACON TURNS OFF.
4. TRANSFER TRAFFIC.
5. RAISE APRON, "UP" UNTIL FLASHING BEACON TURNS OFF.
6. LOWER RAMP "DOWN" UNTIL FLASHING BEACON TURNS OFF.
7. DEACTIVATE REMOTE TRANSMITTER.

* PROVIDE ONE ADDITIONAL PLACARD FOR VESSEL INSTALLATION.

ANGOON OPERATING INSTRUCTIONS - LEC

0. HALT VESSEL WITH MINIMUM 20 FT OF OPEN WATER TO FENDER
1. ACTIVATE REMOTE TRANSMITTER.
2. SOUND HORN "ON"
3. LOWER APRON "DOWN" UNTIL FLASHING BEACON TURNS OFF.
4. DOCK VESSEL AND LOWER STERN RAMP.
5. TRANSFER TRAFFIC.
6. RAISE STERN RAMP.
7. MOVE VESSEL FORWARD 20 FEET MINIMUM.
8. RAISE APRON, "UP" UNTIL FLASHING BEACON TURNS OFF.
9. DEACTIVATE REMOTE TRANSMITTER.

* PROVIDE ONE ADDITIONAL PLACARD FOR VESSEL INSTALLATION.

LOCAL STATION

DO NOT SCALE FROM THESE DRAWINGS USE DIMENSIONS

CHECKED BY: M.A. Hansen

STATE OF ALASKA 49th Maureen A. Hansen EE-8060 REGISTERED PROFESSIONAL ENGINEER

3/17/10

DESIGNED BY: M.A. Hansen

DRAWN BY: R. Grantham

STATE OF ALASKA
DEPARTMENT OF TRANSPORTATION
& PUBLIC FACILITIES
DESIGN & ENGINEERING SERVICES DIVISION-SOUTHEAST REGION

Angoon Ferry Terminal
Improvements, Re-Bid

Controls
Operator Interface

PATH: Q:\ANG\68502\MF\PLANSET\09 ELECTRICAL\RE BID MAR2010\E9 CONTROL SCHEMATIC (REBID).DWG
TAB: E9
HANSEN, MAUREEN A (DOT)

REVISIONS			PROJECT DESIGNATION	YEAR	SHEET NO.	TOTAL SHEETS
NO.	DATE	DESCRIPTION	68502	2010	E9	72

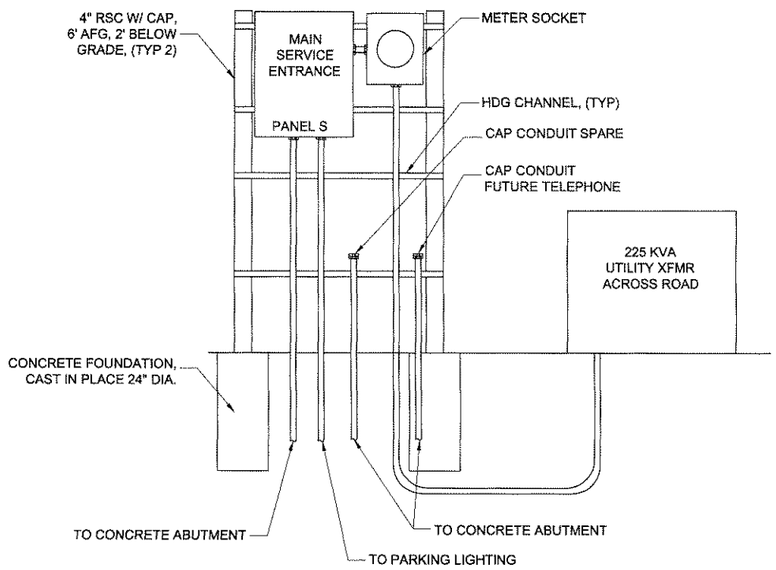

SERVICE ENTRANCE ELEVATION

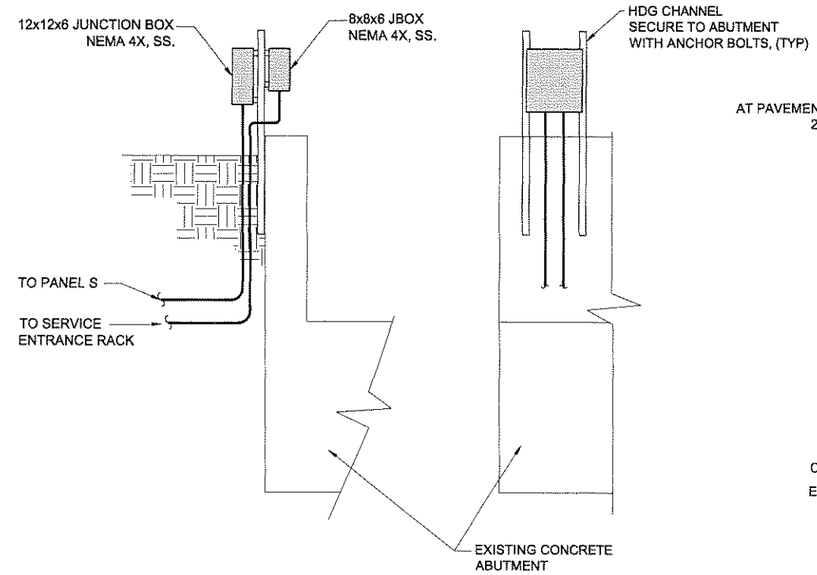

NOTE:

JBOX AT ABUTMENT DETAIL

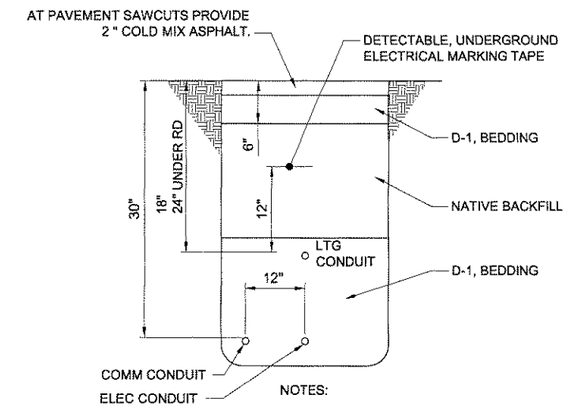

NOTES:

1. CONDUIT SHALL BE PLACED A MINIMUM 3 INCHES AWAY FROM THE TRENCH BOTTOM, TRENCH SIDES AND BELOW TRANSITION LINE OF BEDDING/BACKFILL.
2. TRENCHING IN PARKING AREA - SAWCUT EXISTING ASPHALT AND REPLACE WITH POLYMER-MODIFIED COLD MIX ASPHALT.
3. COMPACTION IN TRENCH SHALL BE TO THE SATISFACTION OF THE ENGINEER.

TRENCH DETAIL

WRITTEN AUTHORIZATION FROM THE ENGINEER IS REQUIRED PRIOR TO EXCAVATION IN UPLANDS.

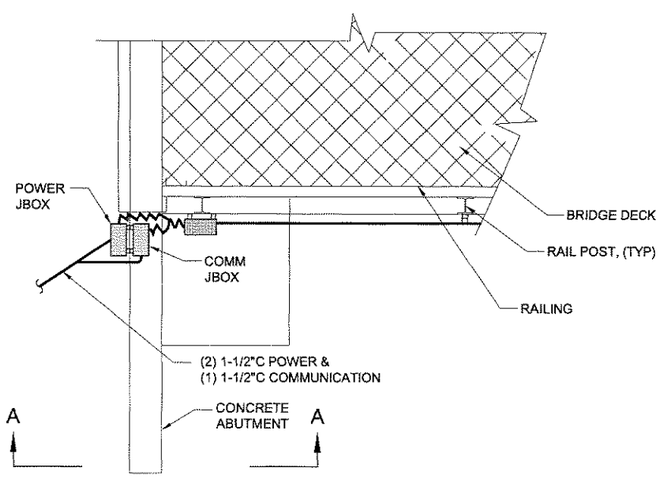

PLAN VIEW

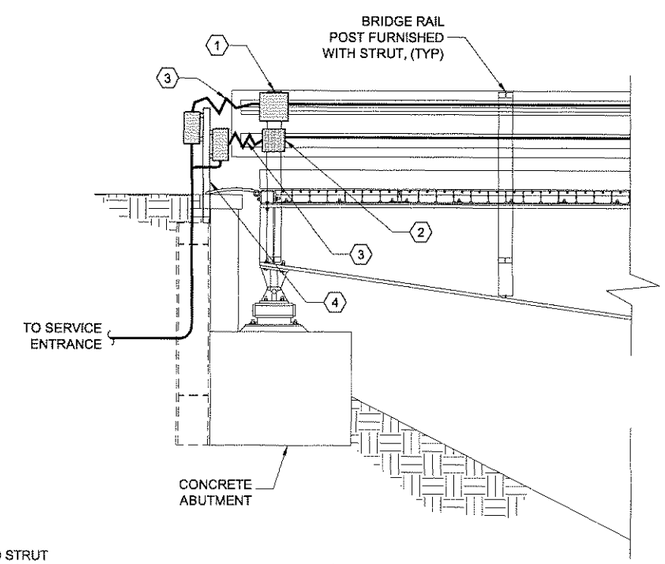

A ELEVATION

1. PROVIDE 12x12x6 JBOX, NEMA 4X. SECURE TO STRUT ON BRIDGE RAIL POST. LABEL EXTERIOR 'POWER'
2. PROVIDE 8x8x6 JBOX, NEMA 4X. SECURE TO STRUT ON BRIDGE RAIL POST. LABEL EXTERIOR 'COMMUNICATION'
3. LIQUIDTIGHT NON-METALLIC FLEXIBLE CONDUIT FOR TRANSITION FROM JBOX ON ABUTMENT TO JBOX ON BRIDGE RAIL, (TYP)
4. SECURE TO ABUTMENT USING HDG CHANNEL AND ANCHOR BOLTS.

ABUTMENT TO BRIDGE TRANSITION DETAIL

DO NOT SCALE FROM THESE DRAWINGS USE DIMENSIONS

CHECKED BY: M.A. Hansen

STATE OF ALASKA 49th Maureen A. Hansen EE-9050 REGISTERED PROFESSIONAL ENGINEER 3/17/10

DESIGNED BY: M.A. Hansen
DRAWN BY: R. Grantham

STATE OF ALASKA
DEPARTMENT OF TRANSPORTATION & PUBLIC FACILITIES
DESIGN & ENGINEERING SERVICES DIVISION-SOUTHEAST REGION

Angoon Ferry Terminal Improvements. Re-Bid

Uplands Electrical Details

PATH: Q:\ANG\68502\MF\PLANSET\09 ELECTRICAL\RE BID MAR2010\E10 UPLANDS-ELEC DETAILS (REBID).DWG
TAB: E10
HANSEN, MAUREEN A (DOT)

REVISIONS			PROJECT DESIGNATION	YEAR	SHEET NO.	TOTAL SHEETS
NO.	DATE	DESCRIPTION	68502	2010	E10	72

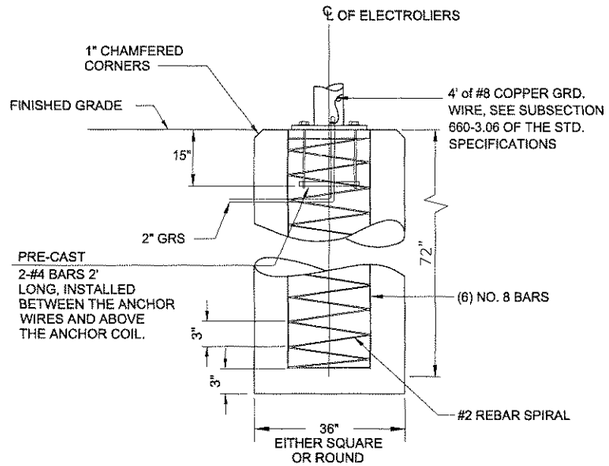

ELECTROLIER FOUNDATION DETAIL

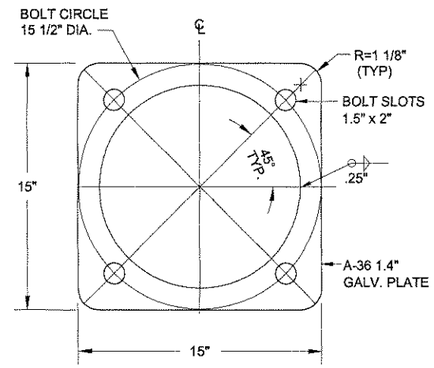

ANCHOR BASE DETAIL

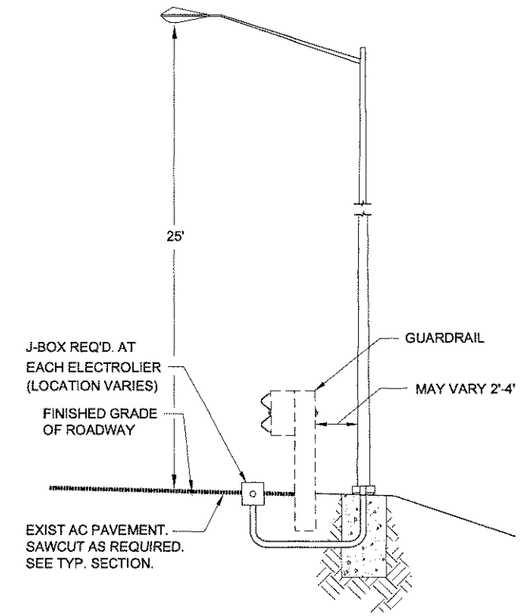

TYPICAL SECTION FOR ELECTROLIER

WRITTEN AUTHORIZATION FROM THE ENGINEER IS REQUIRED PRIOR TO EXCAVATION IN UPLANDS.

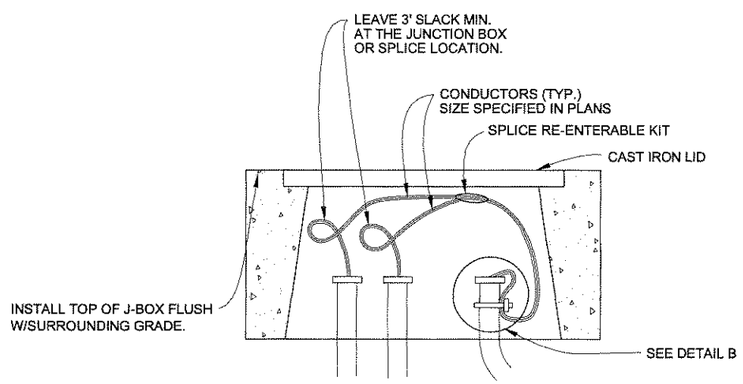

DETAIL A

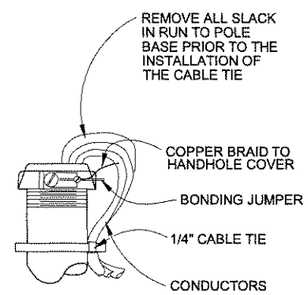

DETAIL B

(IN J-BOX)

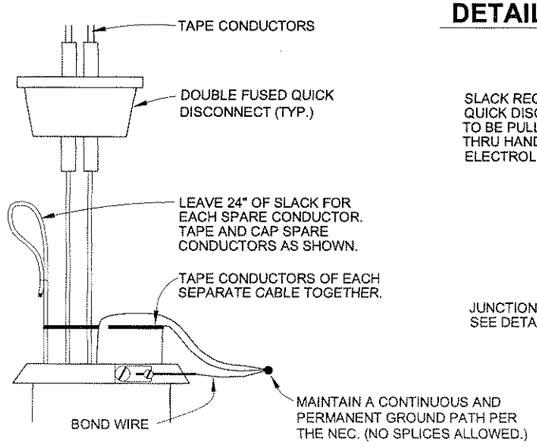

DETAIL C

(IN POLE BASE)

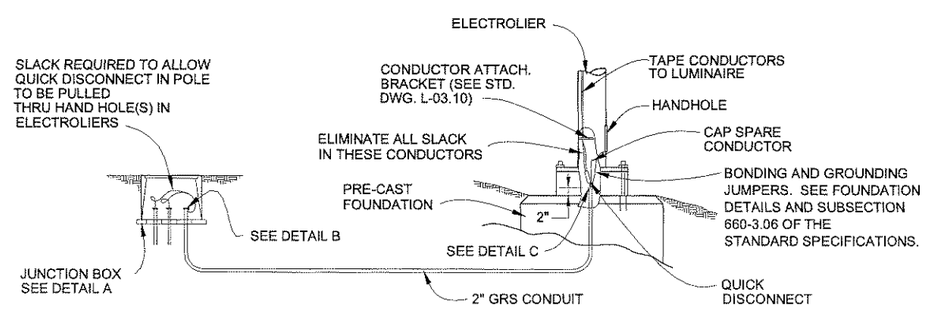

LIGHTING SYSTEM POLE AND J-BOX WIRING DETAILS

(BREAKAWAY COUPLINGS)

ILLUMINATION GENERAL NOTES

1. EACH NEW ELECTROLIER SHALL HAVE A J-BOX INSTALLED ADJACENT TO THE FOUNDATION AS SHOWN IN THE POLE AND J-BOX WIRING DETAIL.
2. ALL JUNCTION BOXES SHALL BE TYPE I-A. SEE STANDARD DRAWING L-23.01.
3. NEW ELECTROLIER FOUNDATIONS SHALL BE PRE-CAST. PRE-CAST FOUNDATIONS SHALL BE LIFTED AND TRANSPORTED USING A DEVICE THAT DISTRIBUTES THE LOAD EVENLY BETWEEN THE ANCHOR BOLTS.
4. LUMINAIRES SHALL BE 277 VOLT, 150 WATT, HIGH PRESSURE SODIUM, MEDIUM DISTRIBUTION, CUT-OFF, IES TYPE III AND SHALL HAVE MAGNETIC REGULATOR BALLASTS, AND HPS LAMPS WITH A 24,000 HOUR RATED LIFE.
5. NON-BREAKAWAY PORTIONS OF FOUNDATIONS SHALL NOT PROTRUDE MORE THAN 4" ABOVE ANY 5' CHORD STARTING AND ENDING ON THE FINISHED GRADE OF THE ELECTROLIER PADS.
6. COMPACTION TO THE SATISFACTION OF THE ENGINEER.

DO NOT SCALE FROM THESE DRAWINGS USE DIMENSIONS

CHECKED BY: M.A. Hansen

STATE OF ALASKA 49th Maureen A. Hansen EE-9050 REGISTERED PROFESSIONAL ENGINEER 9/17/10

DESIGNED BY: M.A. Hansen
DRAWN BY: R. Grantham

STATE OF ALASKA
DEPARTMENT OF TRANSPORTATION & PUBLIC FACILITIES
DESIGN & ENGINEERING SERVICES DIVISION-SOUTHEAST REGION

Angoon Ferry Terminal Improvements, Re-Bid

Uplands Illumination Details

PATH: Q:\ANG\68502\MF\PLANSET\09 ELECTRICAL\RE BID MAR2010\E11 UPLANDS-ILUMINATION DETAILS (REBID).DW
TAB: E11 HANSEN, MAUREEN A (DOT)

REVISIONS			PROJECT DESIGNATION	YEAR	SHEET NO.	TOTAL SHEETS
NO.	DATE	DESCRIPTION	68502	2010	E11	72