HILAND MOUNTAIN CORRECTIONAL CENTER ROOF REPAIR

100% CONSTRUCTION DOCUMENTS | **2019.04.16**

PROJECT NO. 190004204

ALASKA DEPARTMENT OF CORRECTIONS

ARCHITECT

RIM ARCHITECTS
645 G STREET, SUITE 400
ANCHORAGE, ALASKA 99501
907.258.7777

MECHANICAL

RSA ENGINEERING, INC.
670 W FIREWEED LN, SUITE 200
ANCHORAGE, ALASKA 99503
907.276.0521

STRUCTURAL

BBFM ENGINEERS, INC.
845 K STREET
ANCHORAGE, AK 99501
PH 907.274.2520

DRAWING INDEX

GENERAL

T.01	COVER SHEET

ARCHITECTURAL

KP.1	KEY PLAN
HU.2	HMCC HOUSING UNIT#4 ROOF PLAN
HUD.1	HOUSING UNIT CUPOLA DETAILS
HUD.2	HOUSING UNIT ROOF DETAILS
HUD.3	HOUSING UNIT ROOF DETAILS
CA.1	WALKWAY ROOF PLANS
CAD.1	WALKWAY DETAILS
GD.1	GENERAL ROOF DETAILS
GD.2	GENERAL ROOF DETAILS

MECHANICAL

HUM.1	LEGENDS, ABBREVIATIONS, AND SPECIFICATIONS
HUM.2	TYPICAL ATTIC VENTILATION PLAN
CAM.1	WALKWAY DEMOLITION PLAN
CAM.2	WALKWAY REMODEL PLAN

ELECTRICAL

CAE.1	LEGEND AND PLANS
CAE.2	ELECTRICAL PHOTOS

VICINITY MAP

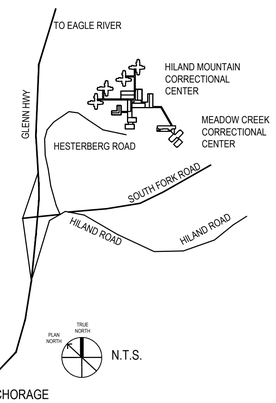

LEGEND

- 0'-0" — DATUM
- REVISION
- DETAIL NUMBER / DETAIL SYMBOL / SHEET DETAIL IS DRAWN ON
- WALL ELEVATION NUMBER / INTERIOR ELEVATION / SHEET ELEVATION IS DRAWN ON
- BUILDING/WALL SECTION NUMBER / BUILDING/WALL SECTION / SHEET BUILDING/WALL SECTION IS DRAWN ON
- PLAN NORTH / TRUE NORTH — TRUE NORTH

ANCHORAGE MAP

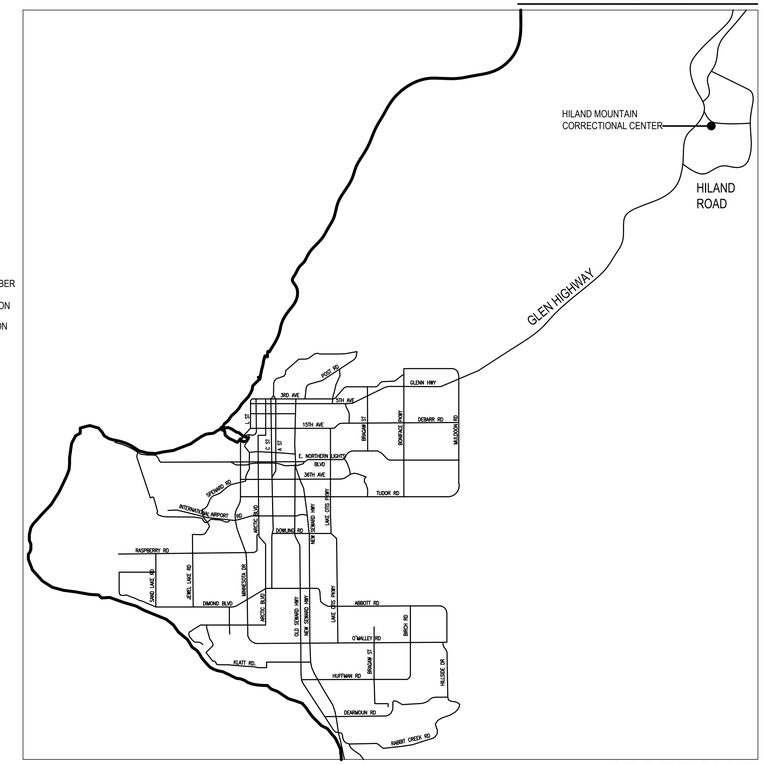

STATE MAP

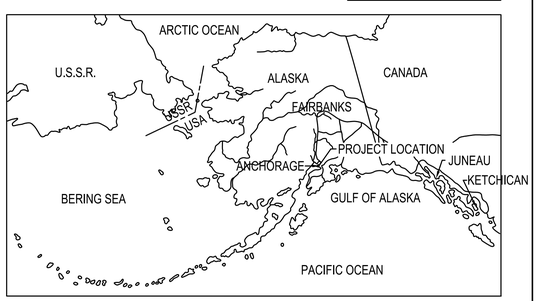

SCOPE:

PROJECT INVOLVES THE REPLACEMENT OF ROOFING ON HOUSING UNIT 3 AND 4 AND OF CANOPIES SERVING HOUSING UNITS 1 & 2 AND 3 & 4. HOUSING UNITS 3 AND 4 ARE ASPHALT SHINGLES OVER PLYWOOD OVER INSULATION OVER VAPOR RETARDER ON CONCRETE SLAB. REMOVE ROOFING ASSEMBLY TO CONCRETE SLAB AND PROVIDE VENTING, INSULATION, PLYWOOD, AND ASPHALT SHINGLE ROOFING. PROVIDE MECHANICALLY VENTILATED ROOF VALLEYS.

WALKWAY SCOPE INVOLVES THE REMOVAL OF BUILT-UP ROOFING MEMBRANE, INSULATION, AND VAPOR RETARDER TO STEEL DECKING. PROVIDE NEW VAPOR RETARDER, INSULATION, AND FULLY ADHERED EPDM ROOFING MEMBRANE. ROOF TOP CONDUITS AND GAS LINE TO REMAIN FUNCTIONAL DURING CONSTRUCTION.

HOUSE 3 IS BASE BID
HOUSE 4 IS ALTERNATE NO. 1
WALKWAYS TO HOUSING UNITS 3 AND 4 ARE ALTERNATE NO. 2
WALKWAYS TO HOUSING UNITS 1 AND 2 ARE ALTERNATE NO. 3

GENERAL PROJECT NOTES:

1. ALL WORK SHALL CONFORM TO THE APPLICABLE CODES AS ADOPTED AND AMENDED BY THE MUNICIPALITY OF ANCHORAGE AND STATE OF ALASKA. THESE INCLUDE, BUT ARE NOT LIMITED TO, THE 2012 IEBC, IBC, IMC, IFC, UPC, NFPA, AND 2014 NEC.
2. THE CONTRACTOR SHALL FIELD VERIFY ALL CONDITIONS AT THE SITE PRIOR TO THE COMMENCEMENT OF CONSTRUCTION. DISCREPANCIES SHALL BE REPORTED TO THE OWNER'S REPRESENTATIVE IMMEDIATELY.
3. DRAWING SCALES THAT ARE INDICATED RELATE TO FULL SIZE DRAWINGS (APPROXIMATELY 22x34 INCHES). SCALES WHICH APPEAR ON DRAWINGS OTHER THAN FULL SIZE SHOULD BE PROPORTIONALLY ADJUSTED.
4. THE CONTRACTOR SHALL REMOVE ALL DEMOLISHED MATERIAL FROM THE PREMISES AND CLEAN ALL SURFACES FREE FROM EXCESS ADHESIVES, GROUT, DIRT, DUST, AND OTHER CONTAMINANTS.
5. UNLESS OTHERWISE NOTED THE CONTRACTOR SHALL PROVIDE ALL MATERIALS REQUIRED TO COMPLETE THE WORK.
6. CONSTRUCTION DOCUMENTS INDICATE FINAL CONDITIONS. CONTRACTOR SHALL PERFORM ALL DEMOLITION AND NEW WORK REQUIRED TO PRODUCE THE FINAL CONDITIONS SHOWN. CONTRACTOR SHALL PATCH, REPAIR AND REFINISH ALL EXISTING SURFACES TO LIKE NEW CONDITION. THE CONTRACTOR MAY, AT HIS OPTION, PROVIDE NEW SUBSTRATE MATERIAL IN LIEU OF PATCHING AND REPAIRING.
7. DUE TO THE NATURE OF REMODELING WORK, THERE IS A POSSIBILITY THAT MATERIALS WILL BE UNCOVERED OR DISCOVERED WHICH MAY CONTAIN ASBESTOS OR OTHER HAZARDOUS MATERIALS. BEFORE COMMENCING CONSTRUCTION, THE CONTRACTOR IS REQUIRED TO MAKE EVERY EFFORT TO CONDUCT THE WORK SO THAT THESE MATERIALS WILL NOT BE DISTURBED. IF IT BECOMES NECESSARY THAT HAZARDOUS MATERIALS BE DISTURBED, THE CONTRACTOR IS TO NOTIFY THE DEPARTMENT'S REPRESENTATIVE AND THE PROPER AGENCIES OF THE PROPOSED DISTURBANCE AND TO CONDUCT SUCH DISTURBANCE IN ACCORDANCE WITH SUBCHAPTER 04.045 OF THE ALASKA SAFETY CODE (BASIC REQUIREMENTS AND METHODS), 40 CFR 61, SUBPART M (NOTIFICATIONS AND PROCEDURES), AND 29 CFR 1926.58 (BASIC REQUIREMENTS AND METHODS). FOR ADDITIONAL INFORMATION THE CONTRACTOR SHALL CONTACT THE ALASKA DEPARTMENT OF LABOR.
8. CONTRACTOR IS RESPONSIBLE FOR COORDINATION AND MAINTAINING SECURITY.
9. CONTRACTOR SHALL PROTECT AND PREVENT DAMAGE TO THE EXISTING FLAT ROOFS.
10. CONTRACTOR SHALL KEEP NAILS FROM FALLING OFF THE ROOF AND SHALL ROLL THE GROUND WITH A MAGNETIC DRUM ALONG ROOF PERIMETER AT END OF EACH DAY TO PICK UP NAILS, STAPLES, AND OTHER CORRECTIONAL CONTRABAN.

CODE DATA:

OCCUPANCY TYPE :
HOUSING UNITS I-3

CONSTRUCTION TYPE:
HOUSING UNITS: I-B

ROOF CLASSIFICATION : B

RIM ARCHITECTS

645 'G' STREET, SUITE 400
ANCHORAGE, ALASKA 99501
Phone: 907.258.7777
Fax: 907.279.8195

www.rimarchitects.com

STATE OF ALASKA 49th Scott A. Bohne 4-15-19 No. AELA - 7917 REGISTERED ARCHITECT

100% CONST DOCUMENTS

PROJECT TITLE: HILAND MOUNTAIN CORRECTIONAL CENTER ROOF REPAIR
ADDRESS: 9101 HESTERBERG ROAD EAGLE RIVER, AK 99577
OWNER: ALASKA DEPARTMENT OF CORRECTIONS
SHEET TITLE: COVER SHEET

NO	DESCRIPTION	DATE

DATE	2019.04.16
PROJECT NO :	181047.103
DRAWN BY :	CMT
CHECKED BY :	SAB

CORPORATE NO. AECL 1227

DWG NO: T.01

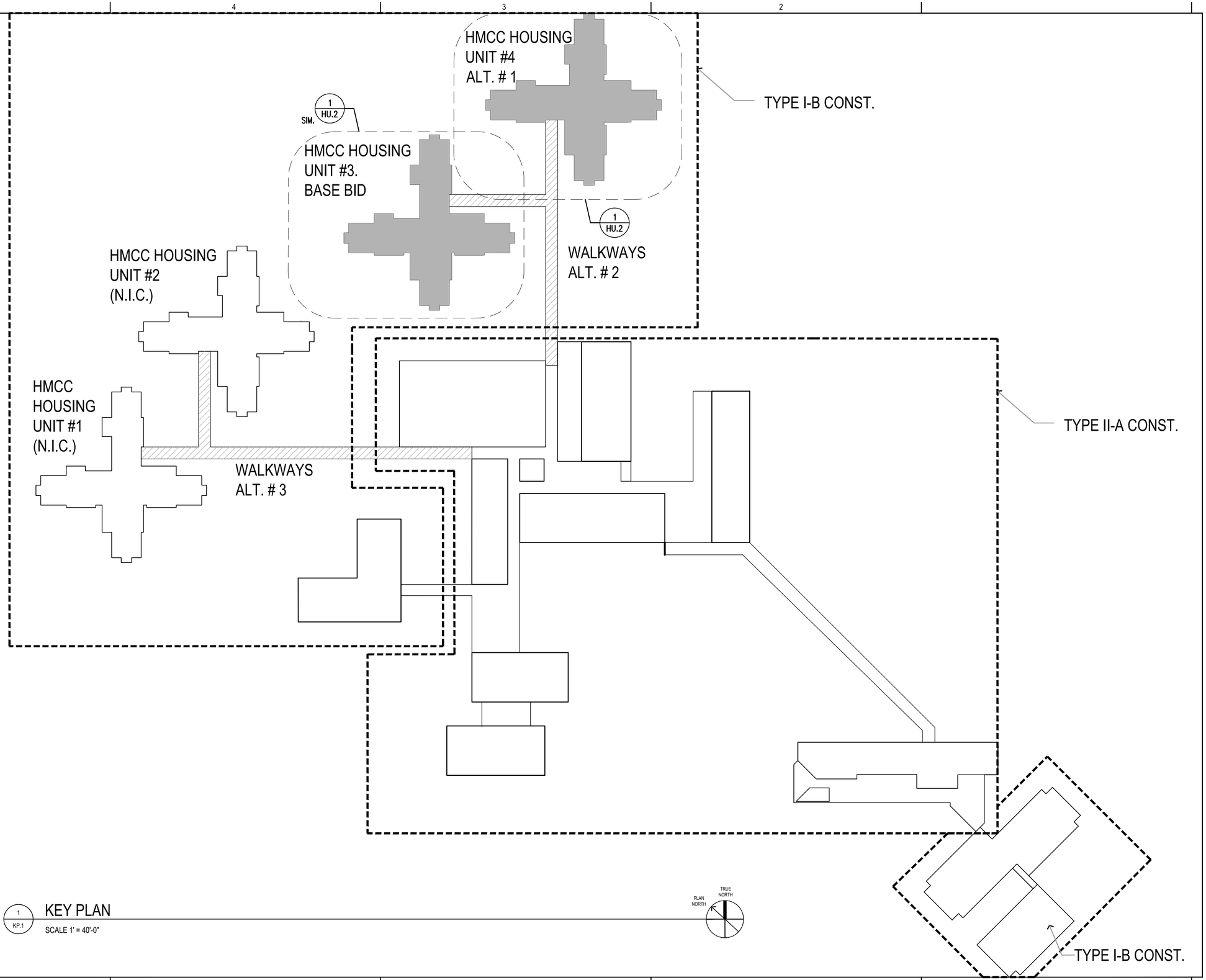

1
KP.1

KEY PLAN

SCALE 1' = 40'-0"

RIM ARCHITECTS

645 'G' STREET, SUITE 400
ANCHORAGE, ALASKA 99501
Phone: 907.258.7777
Fax: 907.279.8195

www.rimarchitects.com

STATE OF ALASKA
49th
Scott A. Bohne
AELD
No. AELA - 7917
REGISTERED PROFESSIONAL ENGINEER

100% CONST DOCUMENTS

PROJECT TITLE: HILAND MOUNTAIN CORRECTIONAL CENTER
ROOF REPAIR
ADDRESS: 9101 HESTERBERG ROAD
EAGLE RIVER, AK 99577
OWNER: ALASKA DEPARTMENT OF CORRECTIONS
SHEET TITLE: KEY PLAN

NO	DESCRIPTION	DATE

DATE	2019.04.16
PROJECT NO :	181047.103
DRAWN BY :	CMT
CHECKED BY :	SAB

CORPORATE NO. AECL 1227

DWG NO:

KP.1

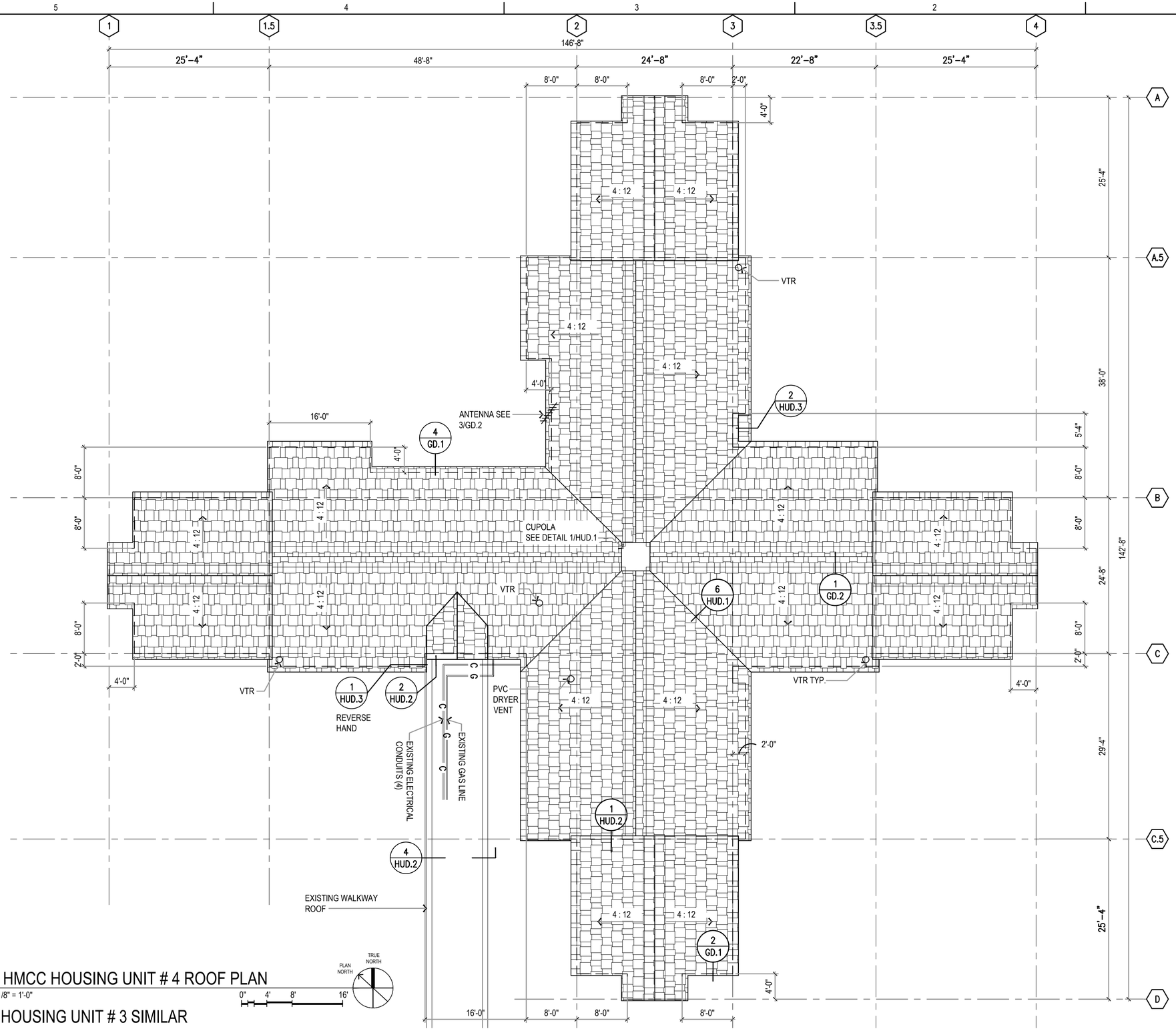

1 HU.2 HMCC HOUSING UNIT # 4 ROOF PLAN

1/8" = 1'-0"

HOUSING UNIT # 3 SIMILAR

LEGEND:

VTR VENT THRU ROOF SEE 2/GD.2

NOTE:

BUILDING LOW ROOF EAVES ARE AT +/- 8'-0" ABOVE GRADE. HIGH ROOFS ARE +/- 6'-0" ABOVE LOW ROOFS.

DETAILS ARE TYPICAL.

SEE 2/HUD.2 FOR EXISTING ROOF ASSEMBLY.

NOTE:

HOUSE 3 IS ROTATED AND OPPOSITE HAND.

RIM ARCHITECTS

645 'G' STREET, SUITE 400
ANCHORAGE, ALASKA 99501
Phone: 907.258.7777
Fax: 907.279.8195

www.rimarchitects.com

49th
Scott A. Bohne
4-9-19
No. AELA - 7917

100% CONST DOCUMENTS

PROJECT TITLE: HILAND MOUNTAIN CORRECTIONAL CENTER ROOF REPAIR

ADDRESS: 9101 HESTERBERG ROAD EAGLE RIVER, AK 99577

OWNER: ALASKA DEPARTMENT OF CORRECTIONS

SHEET TITLE: HMCC HOUSING UNIT # 4 ROOF PLAN

NO	DESCRIPTION	DATE

DATE	2019.04.16
PROJECT NO :	181047.103
DRAWN BY :	CMT
CHECKED BY :	SAB

CORPORATE NO. AECL 1227

DWG NO:

HU.2

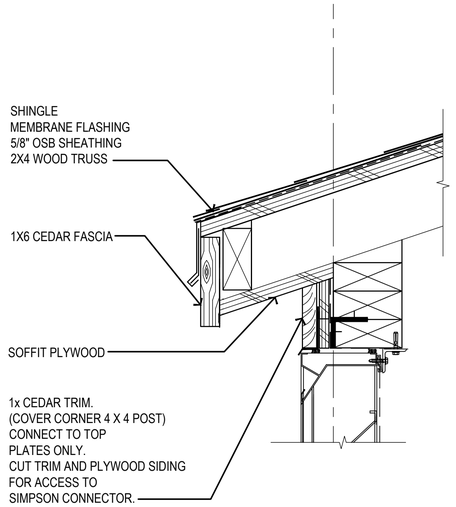

5 HUD.1 CUPOLA EAVE DETAIL
3" = 1'-0"

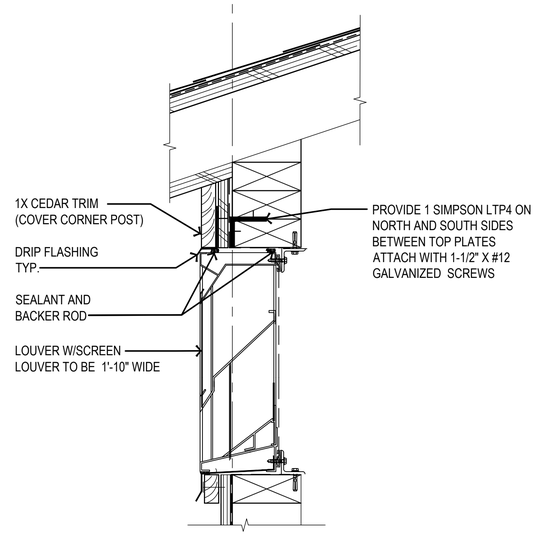

2 HUD.1 LOUVER HEAD DETAIL (JAMB SIM.)
3" = 1'-0"

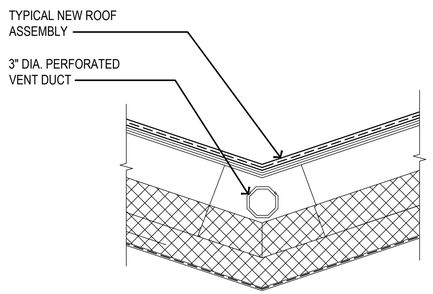

6 HUD.1 VALLEY DETAIL
3" = 1'-0"

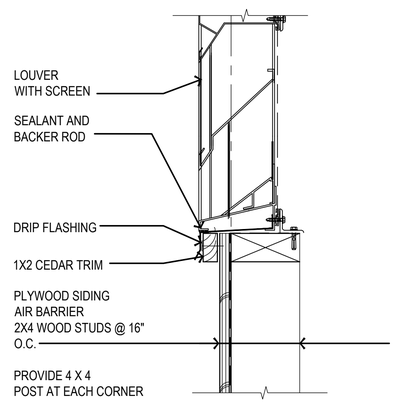

3 HUD.1 LOUVER SILL DETAIL
3" = 1'-0"

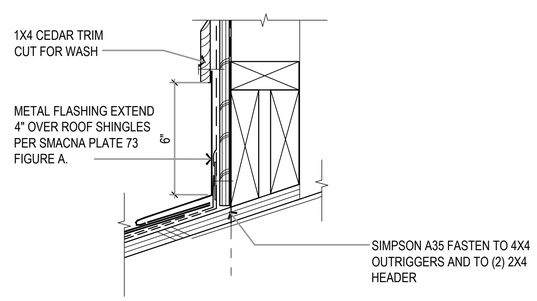

4 HUD.1 CUPOLA FLASHING DETAIL
3" = 1'-0"

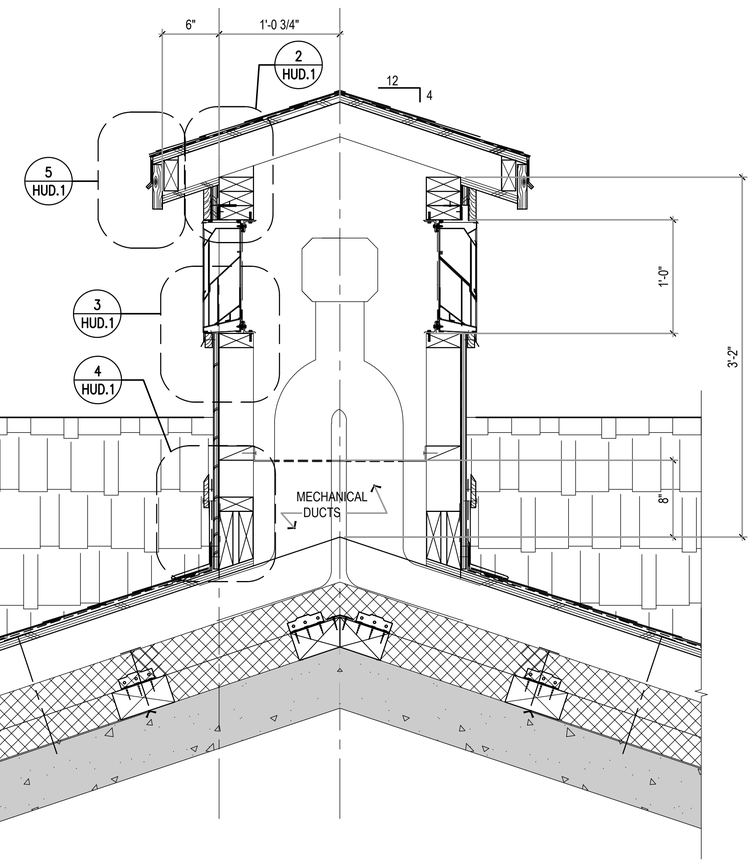

1 HUD.1 CUPOLA SECTION
1-1/2" = 1'-0"

RIM ARCHITECTS

645 'G' STREET, SUITE 400
ANCHORAGE, ALASKA 99501
Phone: 907.258.7777
Fax: 907.279.8195

www.rimarchitects.com

STATE OF ALASKA 49th
Scott A. Bonne
No. AELA - 7947
REGISTERED PROFESSIONAL ARCHITECT

100% CONST DOCUMENTS

PROJECT TITLE: HILAND MOUNTAIN CORRECTIONAL CENTER ROOF REPAIR
ADDRESS: 9101 HESTERBERG ROAD EAGLE RIVER, AK 99577
OWNER: ALASKA DEPARTMENT OF CORRECTIONS
SHEET TITLE: HOUSING UNIT CUPOLA DETAILS

NO	DESCRIPTION	DATE

DATE	2019.04.16
PROJECT NO :	181047.103
DRAWN BY :	CMT
CHECKED BY :	SAB

CORPORATE NO. AECL 1227

DWG NO:
HUD.1

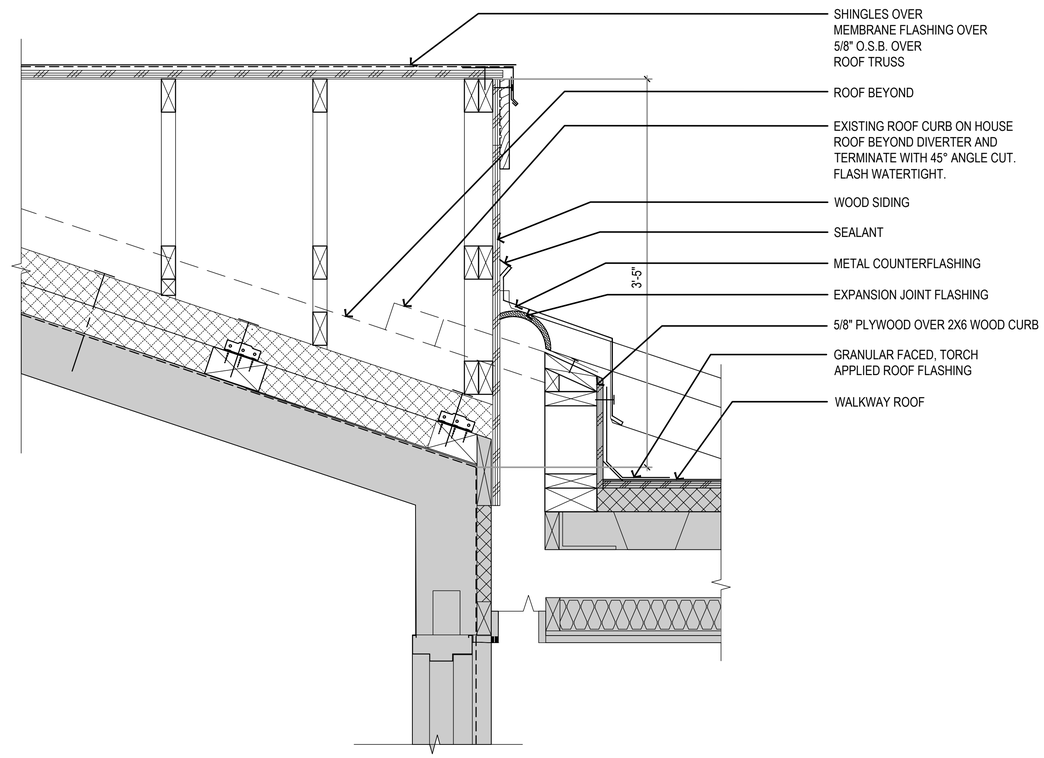

2 HUD.2 COVERED WALKWAY AT HOUSING COMPLEX

1-1/2" = 1'-0"

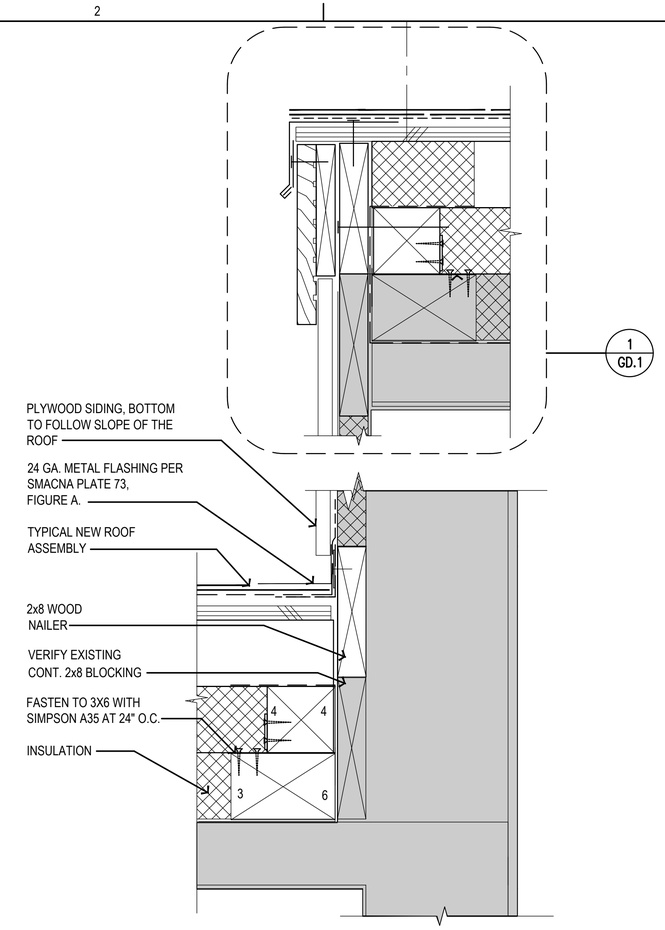

1 HUD.2 RAKE DETAIL

3" = 1'-0"

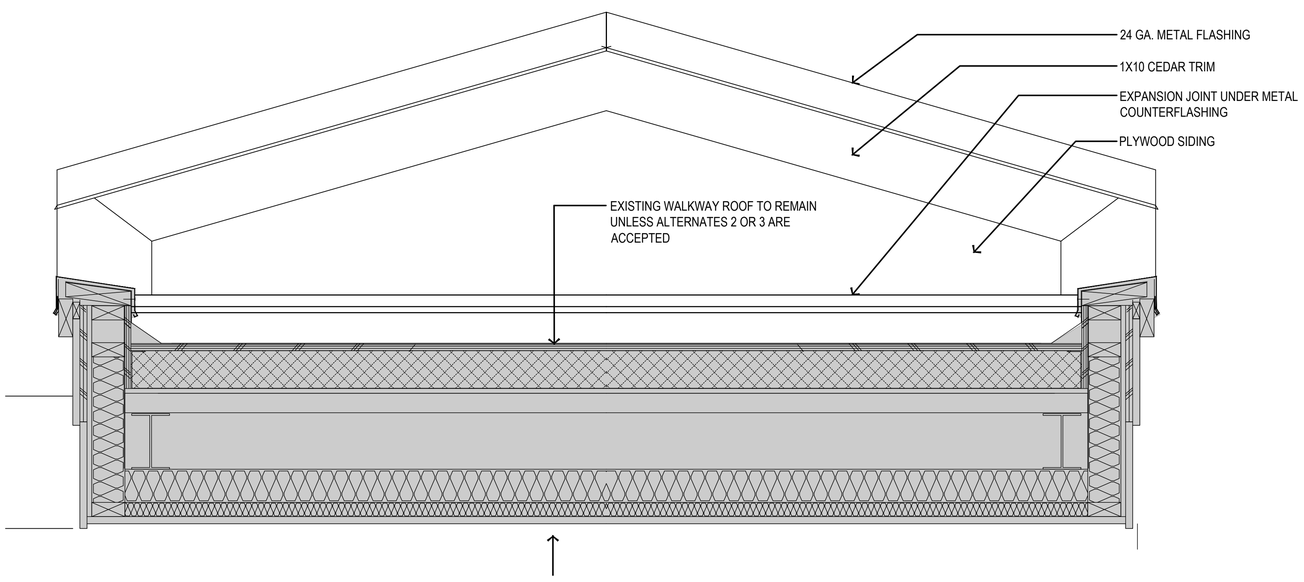

4 HUD.2 COVERED WALKWAY AT HOUSING COMPLEX

1-1/2" = 1'-0"

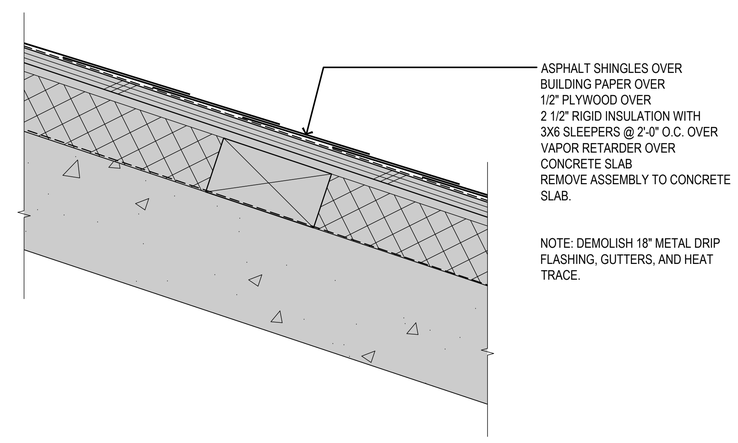

3 HUD.2 EXISTING ROOF ASSEMBLY

3" = 1'-0"

RIM ARCHITECTS

645 'G' STREET, SUITE 400
ANCHORAGE, ALASKA 99501
Phone: 907.258.7777
Fax: 907.279.8195

www.rimarchitects.com

STATE OF ALASKA 49th Scott A. Bohne No. AELA - 7917 REGISTERED PROFESSIONAL ARCHITECT

100% CONST DOCUMENTS

PROJECT TITLE: HILAND MOUNTAIN CORRECTIONAL CENTER
ROOF REPAIR

ADDRESS: 9101 HESTERBERG ROAD
EAGLE RIVER, AK 99577

OWNER: ALASKA DEPARTMENT OF CORRECTIONS

SHEET TITLE: HOUSING UNIT ROOF DETAILS

NO	DESCRIPTION	DATE

DATE	2019.04.16
PROJECT NO :	181047.103
DRAWN BY :	CMT
CHECKED BY :	SAB

CORPORATE NO. AECL 1227

DWG NO:

HUD.2

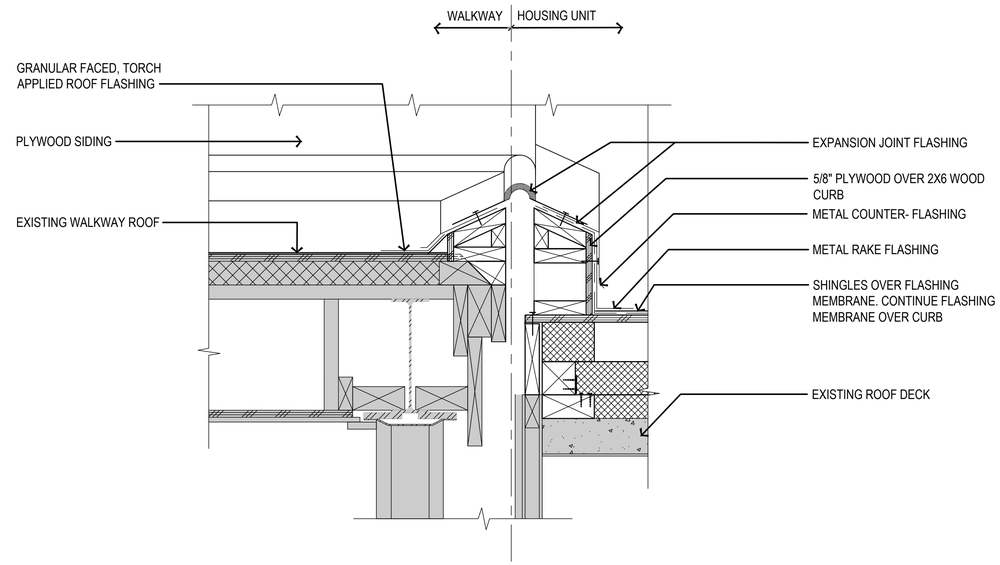

1 / HUD.3 COVER WALKWAY AT HOUSING COMPLEX DETAIL

1-1/2" = 1'-0"

0" 3" 6" 1' 2'

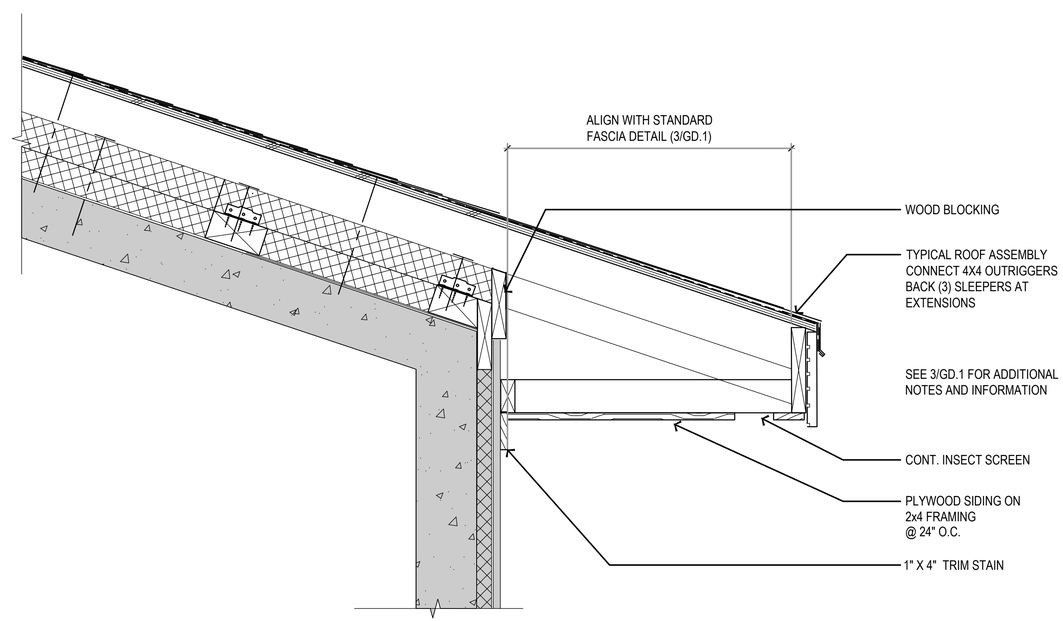

2 / HUD.3 ROOF EXTENSION DETAIL

1-1/2" = 1'-0"

0" 3" 6" 1' 2'

RIM ARCHITECTS

645 'G' STREET, SUITE 400
ANCHORAGE, ALASKA 99501
Phone: 907.258.7777
Fax: 907.279.8195

www.rimarchitects.com

STATE OF ALASKA 49th Scott A. Bohne AELA No. AELA - 7917 REGISTERED PROFESSIONAL ARCHITECT

100% CONST DOCUMENTS

PROJECT TITLE: HILAND MOUNTAIN CORRECTIONAL CENTER ROOF REPAIR

ADDRESS: 9101 HESTERBERG ROAD EAGLE RIVER, AK 99577

OWNER: ALASKA DEPARTMENT OF CORRECTIONS

SHEET TITLE: HOUSING UNIT ROOF DETAILS

NO	DESCRIPTION	DATE

DATE	2019.04.16
PROJECT NO :	181047.103
DRAWN BY :	CMT
CHECKED BY :	SAB

CORPORATE NO. AECL 1227

DWG NO:

HUD.3

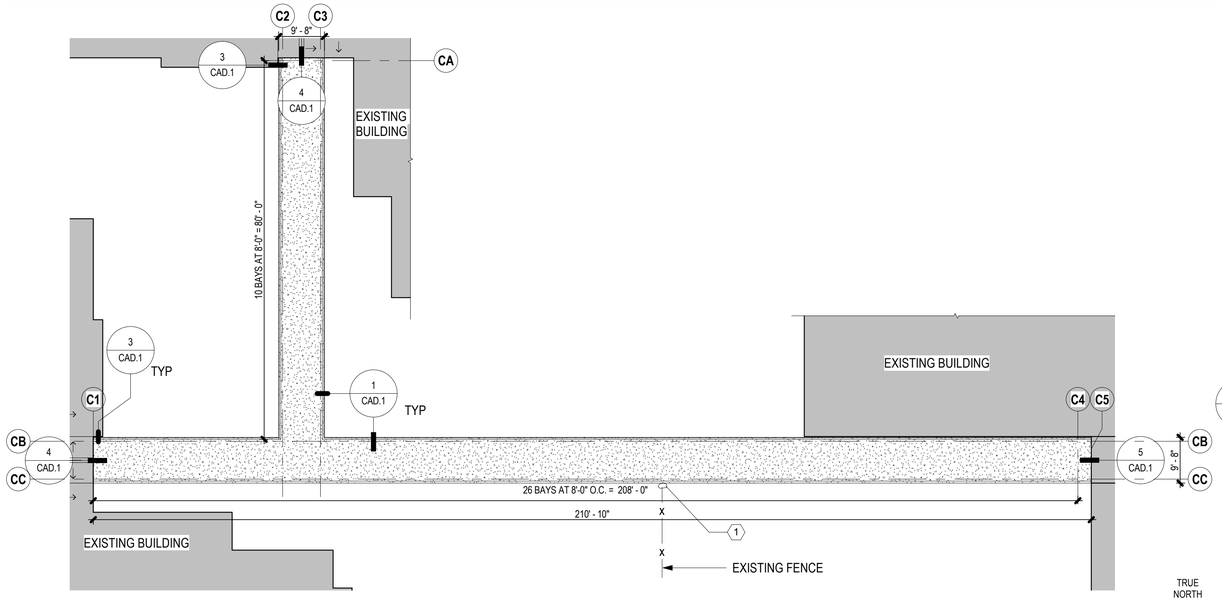

1/CA.1 HOUSE 1 & 2 WALKWAY ROOF (ALTERNATE 3)

1/16" = 1'-0"

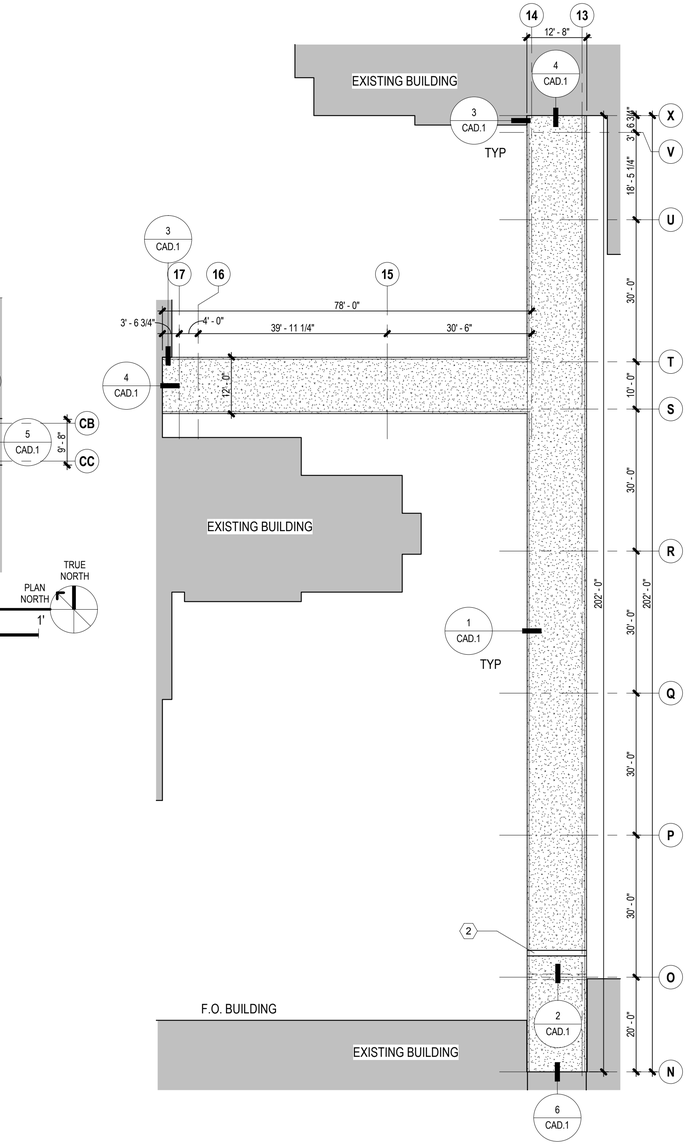

2/CA.1 HOUSE 3 & 4 WALKWAY ROOF (ALTERNATE 2)

1/16" = 1'-0"

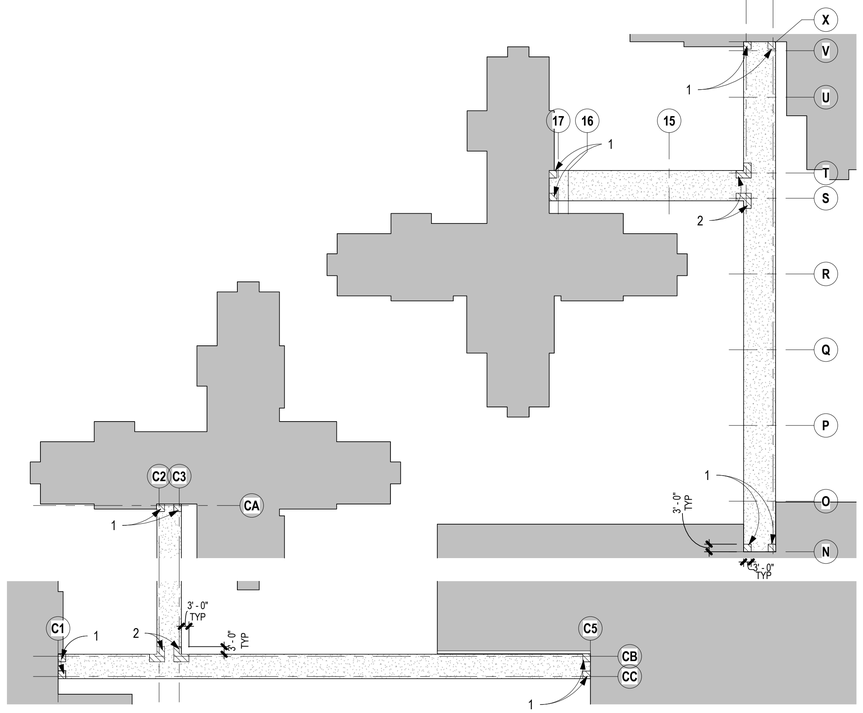

4/CA.1 WIND UPLIFT LOADS - WALKWAY ROOF PLAN

1" = 30'-0"

WIND UPLIFT LOADS

ZONE	LRFD	ASD
1	-62.2 PSF	-37 PSF
2	-103 PSF	-62PSF

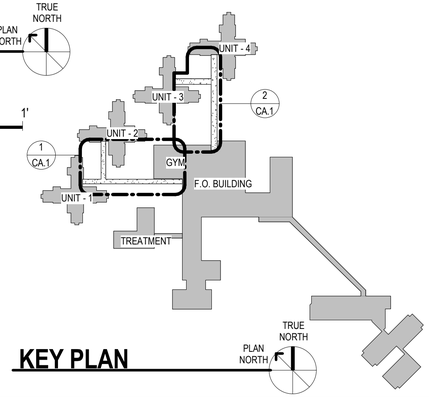

KEY PLAN

ROOF PLAN LEGEND

EXISTING BUILDING

NEW ROOFING

ROOF PLAN GENERAL NOTES

1. WIND LOADING: ALL EXTERIOR ROOFING ASSEMBLIES TO COMPLY WITH DESIGN WIND PRESSURES FOR SPECIFIED LOADING REQUIREMENTS, INCLUDING ALL PARAPET COPING AND RELATED METAL FLASHING.
2. MECHANICAL AND ELECTRICAL DOCUMENTS FOR PIPING AND CONDUITS INCLUDED ON THE ROOF. CONTRACTOR TO COORDINATE LAYOUTS AND MOUNTING REQUIREMENTS
3. ROOF SLOPE: MEMBRANE ROOF ASSEMBLIES TO BE INSTALLED WITH MINIMUM 1/4" INCH PER 12 INCH SLOPE TO EAVE, UNLESS OTHERWISE NOTED.
4. REMOVE BUILT-UP ROOFING ON WALKWAYS TO METAL DECK, PROVIDE FULLY ADHERED EPDM ASSEMBLIES - SEE DETAIL 1/CAD.1
5. FIELD VERIFY DIMENSIONS.

X PLAN SHEET NOTES

1 REMOVE AND REINSTALL CONSTANTINA SECURITY WIRE

2 DEMOLISHED (E) GUTTER AND FILL WITH NEW ROOF ASSEMBLIES - SEE DETAI 1/CAD.1

RIM ARCHITECTS

645 'G' STREET, SUITE 400
ANCHORAGE, ALASKA 99501
Phone: 907.258.7777
Fax: 907.279.8195

www.rimarchitects.com

STATE OF ALASKA 49th Scott A. Bolyea No. AECL-7917 REGISTERED PROFESSIONAL ARCHITECT

100% CONST DOCUMENTS

PROJECT TITLE: HILAND MOUNTAIN CORRECTIONAL CENTER CANOPY REPAIR
ADDRESS: 9101 HESTERBERG ROAD EAGLE RIVER, AK 99577
OWNER: AK DEPT. OF CORRECTIONS
SHEET TITLE: WALKWAY ROOF PLANS

NO	DESCRIPTION	DATE

DATE :	2019.04.16
PROJECT NO :	181047
DRAWN BY :	WVZ
CHECKED BY :	SAG

CORPORATE NO. AECL 1227

DWG NO: CA.1

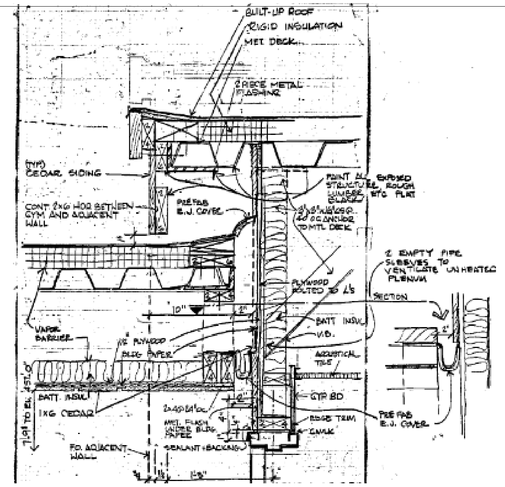

8 CAD.1 **WALKWAY AT EXISTING FLAT ROOF**
NTS

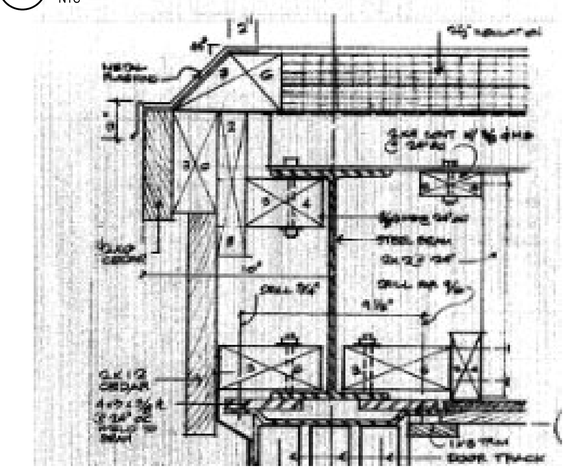

7 CAD.1 **TYPICAL WALKWAY EAVE AT EXISTING**
NTS

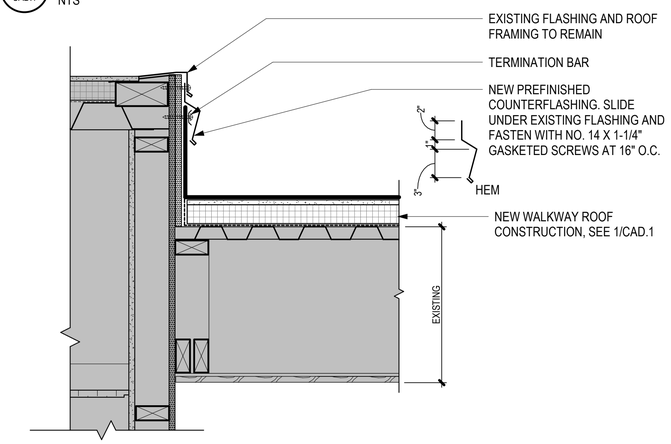

6 CAD.1 **WALKWAY AT FLAT ROOF DETAIL**
1 1/2" = 1'-0"
0" 3" 6" 1'

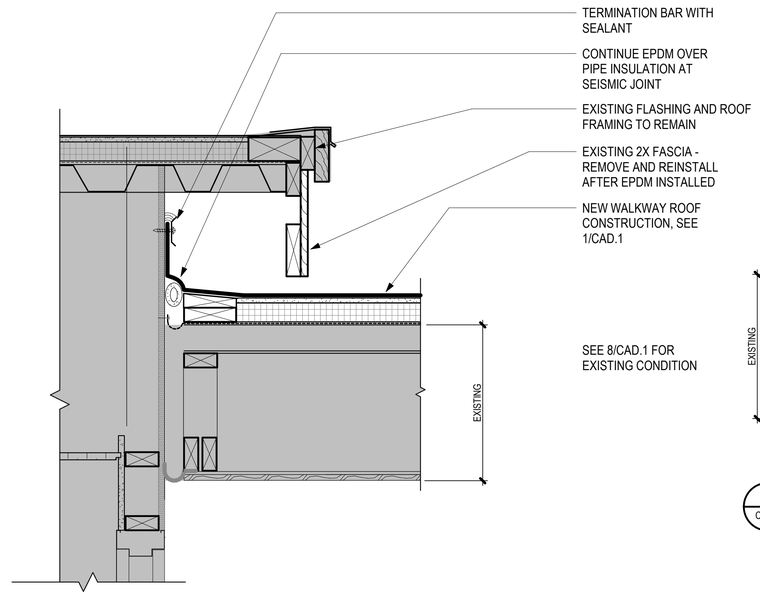

5 CAD.1 **WALKWAY AT FLAT ROOF**
1 1/2" = 1'-0"
0" 3" 6" 1'

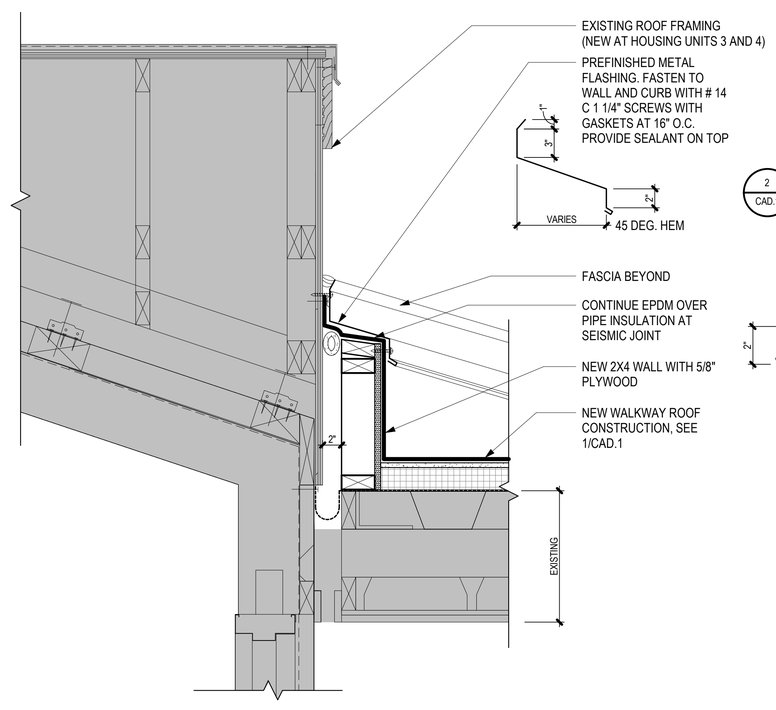

4 CAD.1 **WALKWAY DETAIL AT (E) RAKE**
1 1/2" = 1'-0"
0" 3" 6" 1'

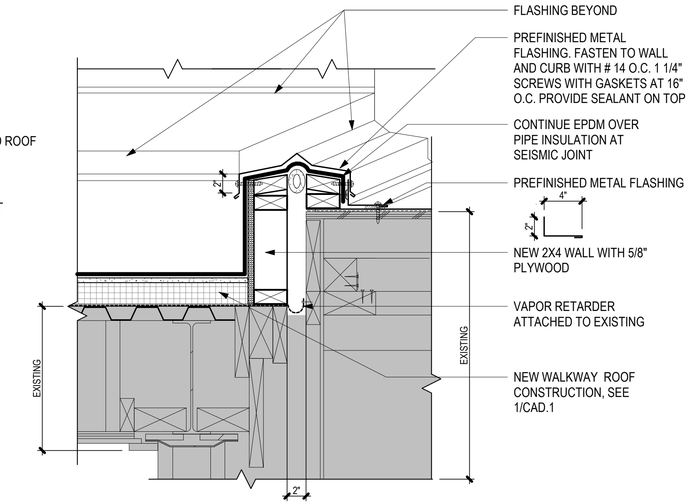

3 CAD.1 **WALKWAY DETAIL AT (E) EAVE**
1 1/2" = 1'-0"
0" 3" 6" 1'

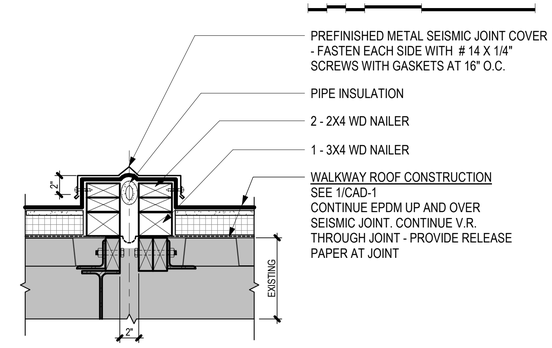

2 CAD.1 **SEISMIC JOINT**
1 1/2" = 1'-0"
0" 3" 6" 1'

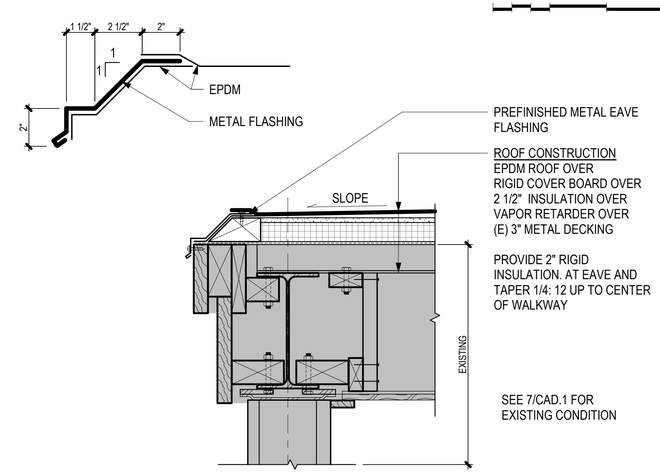

1 CAD.1 **TYPICAL WALKWAY FASCIA DETAIL**
1 1/2" = 1'-0"
0" 3" 6" 1'

RIM ARCHITECTS

645 'G' STREET, SUITE 400
ANCHORAGE, ALASKA 99501
Phone: 907.258.7777
Fax: 907.279.8195

www.rimarchitects.com

STATE OF ALASKA 49th Scott A. Bilow No. AELA-7917 REGISTERED PROFESSIONAL ARCHITECT

100% CONST DOCUMENTS

PROJECT TITLE: HILAND MOUNTAIN CORRECTIONAL CENTER
CANOPY REPAIR
ADDRESS: 9101 HESTERBERG ROAD
EAGLE RIVER, AK 99577
OWNER: AK DEPT. OF CORRECTIONS
SHEET TITLE: WALKWAY DETAILS

NO	DESCRIPTION	DATE

DATE :	2019.04.16
PROJECT NO :	181047
DRAWN BY :	WVZ
CHECKED BY :	SAB

CORPORATE NO. AECL 1227

DWG NO:
CAD.1

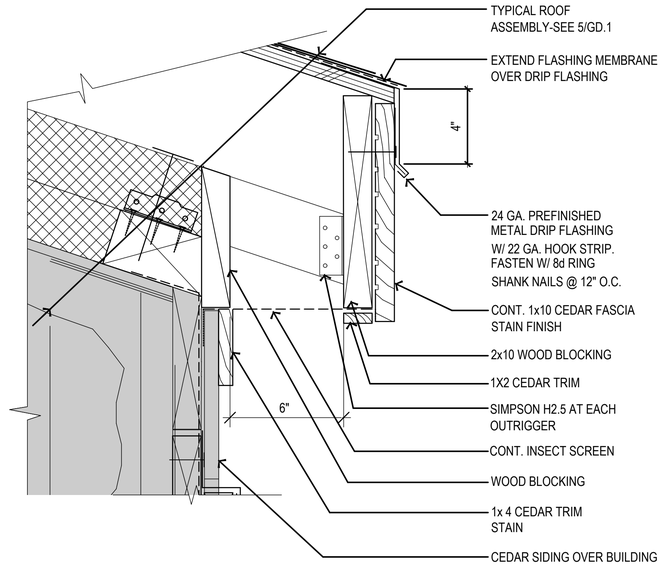

3 GD.1 FASCIA DETAIL
3" = 1'-0"

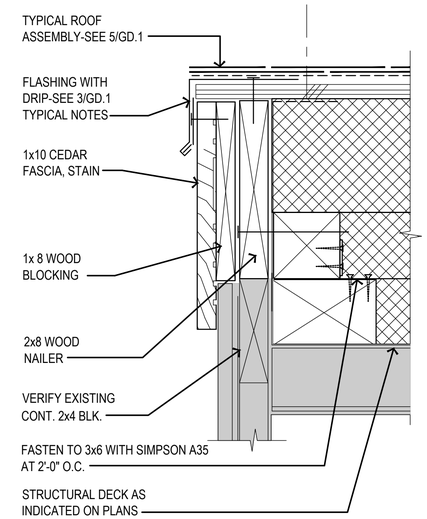

1 GD.1 RAKE DETAIL
3" = 1'-0"

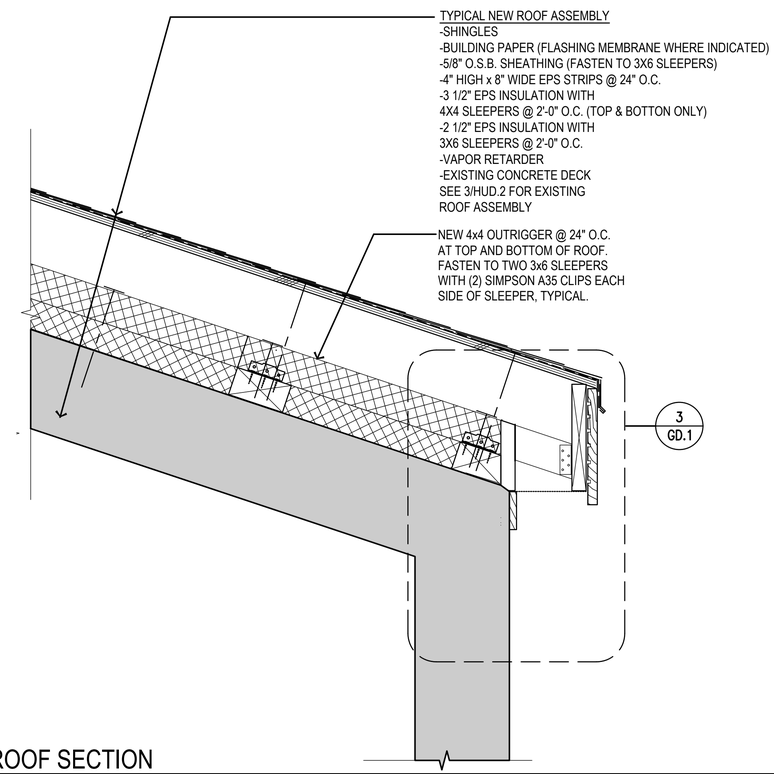

4 GD.1 ROOF SECTION
1-1/2" = 1'-0"

NOTE:
FASTEN OSB THROUGH 4" X 8" EPS STRIPS AND INTO 3 X 6 SLEEPERS WITH #12 X 11" SCREWS AT 2'-0" O.C. EACH WAY.
CONNECT 3 X 6 SLEEPERS TO CONCRETE DECKS WITH HILTI HIT HY150 ADHESIVE ANCHORS, 3/8" DIAMETER X 1-3/8" MIN. EMBED AT 48" O.C.

NOTE:
CONCRETE DECK IS UNEVEN.
SHIM 3x6 SLEEPERS UP TO 1/2-INCH FOR EVEN DRAINAGE

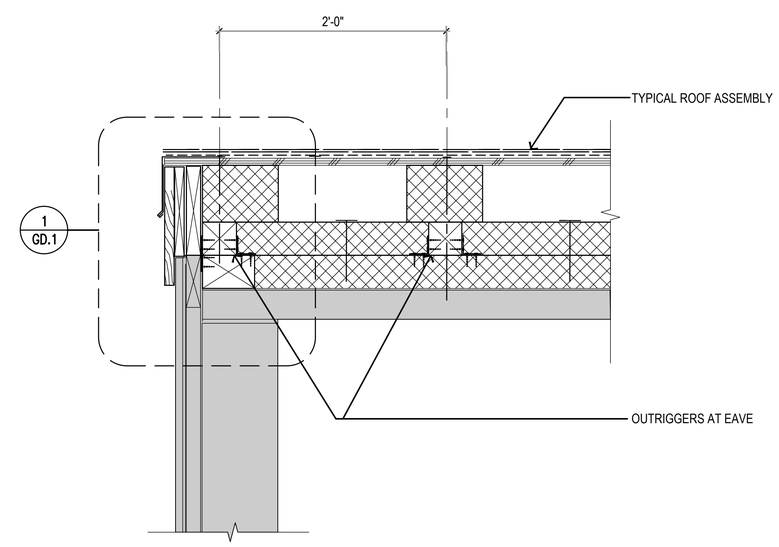

2 GD.1 RAKE DETAIL
1-1/2" = 1'-0"

RIM ARCHITECTS

645 'G' STREET, SUITE 400
ANCHORAGE, ALASKA 99501
Phone: 907.258.7777
Fax: 907.279.8195

www.rimarchitects.com

STATE OF ALASKA 49th Scott A. Bohne No. AELA - 7917 REGISTERED PROFESSIONAL ARCHITECT

100% CONST DOCUMENTS

PROJECT TITLE: HILAND MOUNTAIN CORRECTIONAL CENTER ROOF REPAIR
ADDRESS: 9101 HESTERBERG ROAD EAGLE RIVER, AK 99577
OWNER: ALASKA DEPARTMENT OF CORRECTIONS
SHEET TITLE: GENERAL ROOF DETAILS

NO	DESCRIPTION	DATE

DATE	2019.04.16
PROJECT NO :	181047.103
DRAWN BY :	CMT
CHECKED BY :	SAB

CORPORATE NO. AECL 1227

DWG NO: GD.1

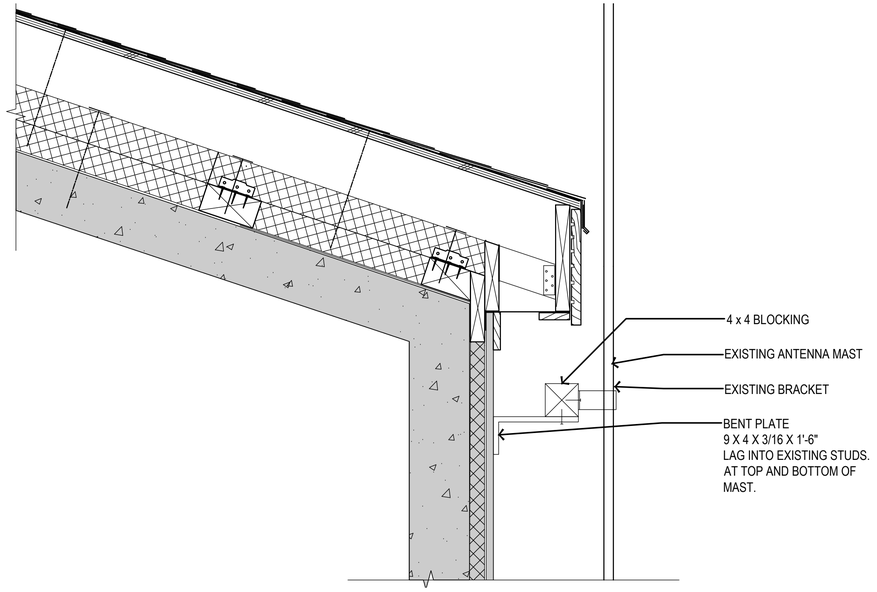

3 GD.2 ANTENNA DETAIL

1-1/2" = 1'-0"

0" 3" 6" 1' 2'

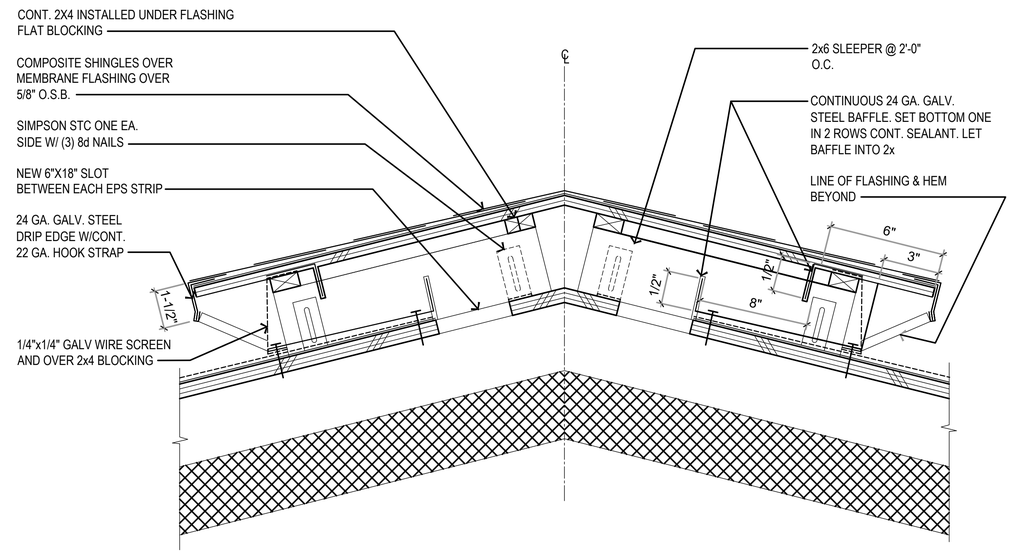

1 GD.2 RIDGE DETAIL

3" = 1'-0"

0" 3" 6" 1'

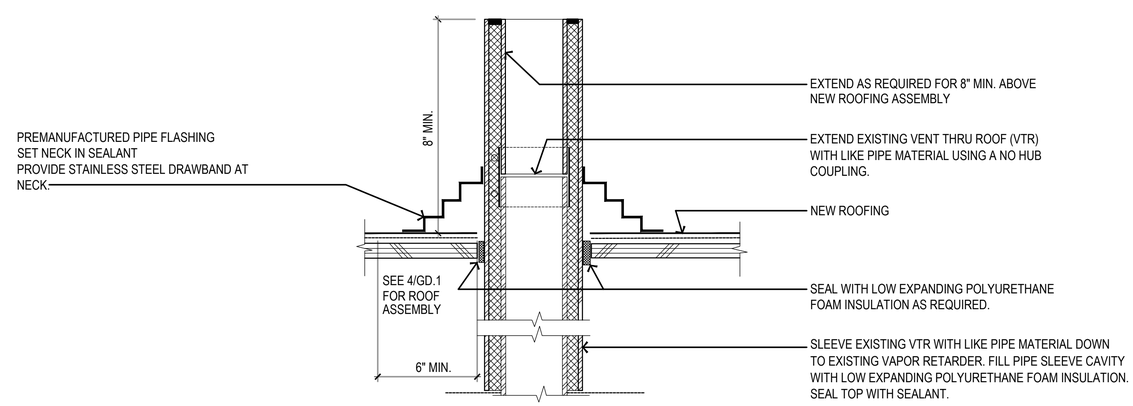

2 GD.2 VENT THRU ROOF (VTR)

3" = 1'-0"

0" 3" 6" 1'

RIM ARCHITECTS

645 'G' STREET, SUITE 400
ANCHORAGE, ALASKA 99501
Phone: 907.258.7777
Fax: 907.279.8195

www.rimarchitects.com

STATE OF ALASKA 49th Scott A. Bohne No. AELA - 7847 REGISTERED PROFESSIONAL ARCHITECT

100% CONST DOCUMENTS

PROJECT TITLE: HILAND MOUNTAIN CORRECTIONAL CENTER ROOF REPAIR

ADDRESS: 9101 HESTERBERG ROAD EAGLE RIVER, AK 99577

OWNER: ALASKA DEPARTMENT OF CORRECTIONS

SHEET TITLE: GENERAL ROOF DETAILS

NO	DESCRIPTION	DATE

DATE	2019.04.16
PROJECT NO :	181047.103
DRAWN BY :	CMT
CHECKED BY :	SAB

CORPORATE NO. AECL 1227

DWG NO:

GD.2

FAN SCHEDULE

SYMBOL	MFGR/MODEL	TYPE	SERVICE	CFM	TSP IN W.C.	RPM	MOTOR DATA AMPS	MOTOR DATA POWER	DRIVE	REMARKS
RV-1	FANTECH/FKD 8XL	INLINE CENTRIFUGAL	ROOF VENTILATION	680	.5"	2,600	2.99	120/60/1	DIRECT	14 AMP VARIABLE SPEED CONTROLLER.

LOUVER SCHEDULE

SYMBOL	MFGR/MODEL	FUNCTION	MATERIAL	MAXIMUM PRESSURE DROP	NOMINAL FREE AREA	REMARKS
L-1	RUSKIN/ELF375DX	AIR INTAKE	ALUMINUM	.15" W.G.	54%	3/4" NON CORRODING MESH SCREEN, BAKED ENAMEL COLOR SELECTED BY ARCHITECT.

SPECIFICATIONS:

PLANS – THE CONTRACTOR SHALL PROVIDE ALL MATERIALS AND LABOR NECESSARY FOR A COMPLETE AND OPERABLE SYSTEM. THE DRAWINGS ARE PARTLY DIAGRAMMATIC, NOT NECESSARILY SHOWING ALL OFFSETS OR EXACT LOCATIONS OF PIPING AND DUCTS, UNLESS SPECIFICALLY DIMENSIONED.

ELECTRICAL WORK – ALL ELECTRICAL WORK IS TO BE PERFORMED BY A LICENSED ELECTRICIAN IN ACCORDANCE WITH THE NATIONAL ELECTRICAL CODE, NEC.

COMPLETE PROJECT – THE INTENT OF THIS PROJECT IS TO LET ONE CONTRACT WHICH INCLUDES ALL WORK REQUIRED FOR A COMPLETE JOB.

PERMITS – ADOT&PF WILL APPLY FOR THE STATE FIRE MARSHAL PERMIT, THE CONTRACTOR SHALL SECURE AND PAY FOR OTHER NECESSARY PERMITS AND FEES.

CODE – ALL WORK SHALL BE DONE IN ACCORDANCE WITH THE LATEST ADOPTED EDITION OF THE INTERNATIONAL BUILDING CODE (IBC), INTERNATIONAL MECHANICAL CODE (IMC) AND THE NATIONAL ELECTRICAL CODE (NEC). SHEET METAL WORK SHALL BE DONE IN ACCORDANCE WITH SMACNA STANDARDS.

WARRANTY – ALL WORK PERFORMED UNDER THIS CONTRACT TO BE FREE FROM DEFECTS IN MATERIALS AND WORKMANSHIP FOR A PERIOD OF ONE YEAR FROM ACCEPTANCE. ANY FAULTY MATERIALS OR WORKMANSHIP SHALL BE REPAIRED OR REPLACED TO THE SATISFACTION OF THE OWNER DURING THE GUARANTEE PERIOD.

MATERIALS – ALL MATERIALS SHALL BE NEW AND UNUSED, UNLESS OTHERWISE INDICATED. ALL NEW MATERIALS SHALL BE INSTALLED IN ACCORDANCE WITH THE MANUFACTURER'S DIRECTIONS AND IN THE BEST PRACTICE OF THE CRAFT. OBTAIN OWNER'S APPROVAL OF ALL PRODUCTS PRIOR TO ORDERING OR INSTALLING ANY PART OF ANY SYSTEM.

EQUIPMENT SUBSTITUTIONS – ALL EQUIPMENT LISTED IS REPRESENTATIVE OF THE STANDARD OF QUALITY AND PERFORMANCE REQUIRED. OR EQUAL SUBSTITUTIONS WILL BE CONSIDERED IF THE SUBSTITUTE CATALOG CUTS ARE SUBMITTED AND ARE SHOWN TO BE EQUAL OR BETTER QUALITY, INCLUDING EFFICIENCY OF PERFORMANCE, SIZE AND WEIGHT.

SANITARY SEWER VENT PIPING – CAST IRON PIPE: CISPI 301, HUBLESS, SERVICE WEIGHT. FITTINGS: CAST IRON. JOINTS: CISPI 310, NEOPRENE GASKETS AND STAINLESS STEEL CLAMP-AND-SHIELD ASSEMBLIES. COPPER PIPE: ASTM B306, DWV. FITTINGS: ASME B16.3, CAST BRONZE, OR ASME B16.29, WROUGHT COPPER DWV. JOINTS: ANSI/ASTM B32, SOLDER, GRADE 95TA; FLUX: ASTM B813.

PVC WATER HEATER FLUE – PVC PIPE: ASTM D2665. FITTINGS: PVC. JOINTS: ASTM D2855, SOLVENT WELD WITH ASTM D2564 SOLVENT CEMENT.

DUCTWORK – NON-COMBUSTIBLE OR CONFORMING TO REQUIREMENTS FOR CLASS 1 AIR DUCT MATERIALS, OR UL 181, ASTM A527 GALVANIZED STEEL SHEET, LOCK-FORMING QUALITY, HAVING ZINC COATING OF 1.25 OZ. PER SQ. FT. FOR EACH SIDE IN CONFORMANCE WITH ASTM A90.

ACCESS – PROVIDE WORKABLE ACCESS TO ALL SERVICEABLE AND/OR OPERABLE EQUIPMENT. PROJECT RECORD DRAWINGS – MARK UP A CLEAN SET OF DRAWINGS AS THE WORK PROGRESSES TO SHOW THE DIMENSIONED LOCATION AND ROUTING OF ALL MECHANICAL WORK WHICH WILL BECOME PERMANENTLY CONCEALED. SHOW ROUTING OF WORK IN CONCEALED BLIND SPACES WITHIN THE BUILDING. AT COMPLETION OF PROJECT, DELIVER THESE DRAWINGS TO THE OWNER.

LOUVERS – FURNISH AND INSTALL LOUVERS AS HEREINAFTER SPECIFIED WHERE SHOWN ON PLANS OR AS DESCRIBED IN SCHEDULES. LOUVERS SHALL BE STATIONARY DRAINABLE TYPE WITH DRAIN GUTTERS IN EACH BLADE AND DOWNSPOUTS IN JAMBS AND MULLIONS. LOUVERS SHALL HAVE A MINIMUM OF 54% FREE AREA. STATIONARY DRAINABLE BLADES SHALL BE CONTAINED WITHIN A 4" FRAME. LOUVER COMPONENTS (HEADS, JAMBS, SILLS, BLADES, & MULLIONS) SHALL BE FACTORY ASSEMBLED BY THE LOUVER MANUFACTURER. LOUVER DESIGN SHALL WITHSTAND A WINDLOAD OF 20 LBS. PER SQ. FT. EQUIVALENT OF A 90 MPH WIND.

ROOF VENTILATION FANS – GALVANIZED STEEL CASING WITH PRESSED INLET AND OUTLET CONES, INTEGRAL TURNING VANES, BAKED POWDER COATING FINISH. NON-OVERLOADING MIXED FLOW AXIAL/CENTRIFUGAL TYPE, SELF LUBRICATING BEARINGS. FACTORY INSTALLED DISCONNECT SWITCH.

ROOF VENTILATION FAN RV-1 NOTES:

ATTIC VENTILATION FAN RV-1 – THE FAN SHALL RUN CONTINUOUSLY, PROVIDE A RED PILOT LIGHT SWITCH IN MECHANICAL SPACE. PROVIDE ENGRAVED PLASTIC PLACARD "ROOF VENTILATION FAN". PROVIDE WEATHERPROOF GFCI AND WEATHERPROOF DISCONNECT IN NEW CUPOLA. PROVIDE AND INSTALL 1/2"C, 3#12 TO NEAREST 120/240V PANELBOARD WITH CAPACITY. PROVIDE AND INSTALL 20A/1P BREAKER TO MATCH EXISTING TYPE AND AIC RATING. LABEL BREAKER TO INDICATE LOAD SERVED. ALL WIRING SHALL BE IN STRICT ACCORDANCE WITH THE LATEST ADOPTED VERSION OF THE NATIONAL ELECTRIC CODE.

DEMOLITION AND REMODEL NOTES:

VENTS THROUGH ROOF – REMOVE EXISTING FLASHING, AND INSULATION AS REQUIRED TO INSTALL NEW VENT PIPING UP THROUGH ROOF. CONNECT NEW VENT EXTENSION WITH NO-HUB SHIELD AND CLAMP ASSEMBLY; FERNCO OR EQUAL. EXTEND NEW VENT THROUGH ROOF TO BE A MINIMUM OF 8" ABOVE FINISHED ROOF, SEE ARCHITECTURAL PLANS FOR DETAILS.

WATER HEATER FLUES – DEMOLISH EXISTING FLUE TERMINATION FITTING AS REQUIRED TO INSTALL NEW PVC PIPE EXTENSION. MAKE EXTENSION WITH SOLVENT WELD COUPLING AND PVC PIPING OF THE SAME SCHEDULE AND DIAMETER AS EXISTING.

DRYER VENTS THROUGH ROOF – DEMOLISH EXISTING ADJUSTABLE ELBOWS AT VENT DISCHARGE. DEMOLISH EXISTING ROOF JACK AND STORM COLLAR. INSTALL NEW DRYER VENT ROOF CAP, BROAN MODEL 636 OR EQUAL. INSTALL NEW INLINE CLOTHES DRYER LINT TRAP AT THE DRYER VENT WALL PENETRATION IN LAUNDRY ROOM BELOW, FANTECH DBLT-4W OR EQUAL.

LEGEND

--------	DENOTES DEMOLITION
	POINT OF CONNECTION
#12	NUMBER AND SIZE OF WIRES (NO MARKS = 3 #12)
	DUPLEX RECEPTACLE
	DISCONNECT SWITCH
WP	WEATHERPROOF

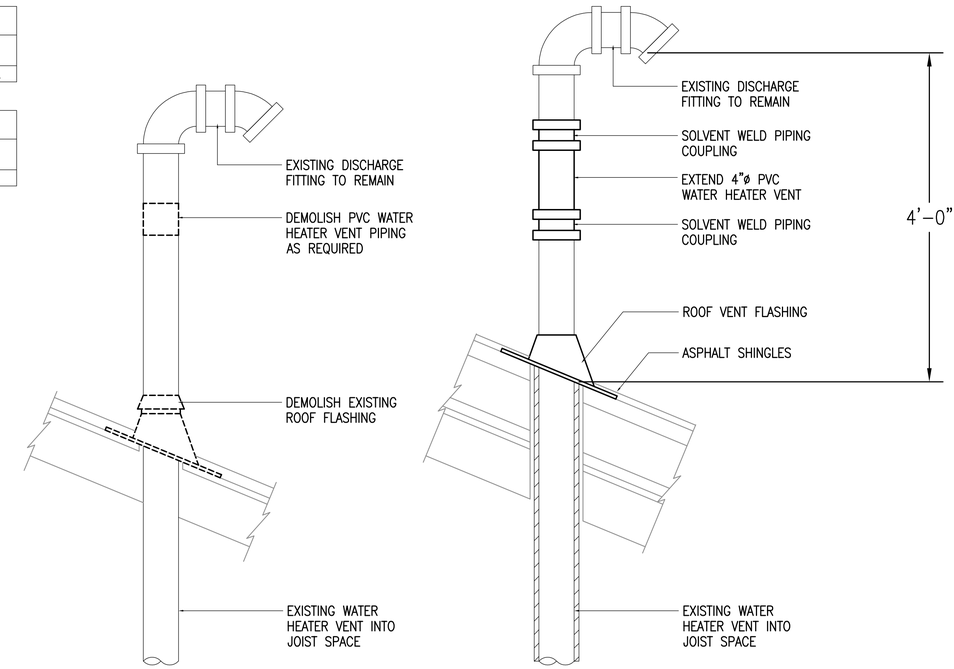

1 PVC WATER HEATER VENT THROUGH SHINGLE ROOF
NO SCALE

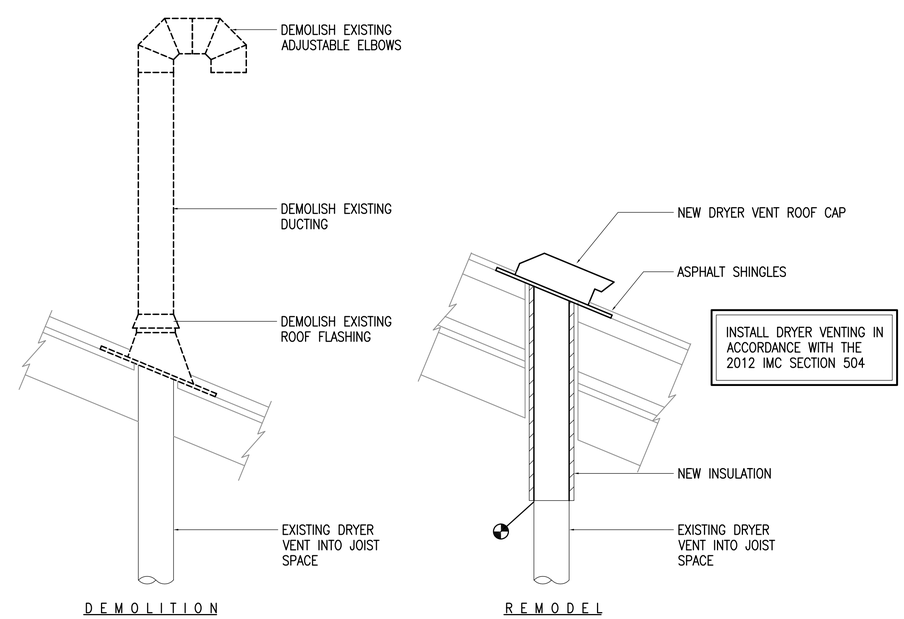

2 DRYER VENT THROUGH SHINGLE ROOF
NO SCALE

RIM ARCHITECTS
645 'G' STREET, SUITE 400
ANCHORAGE, ALASKA 99501
Phone: 907.258.7777
Fax: 907.279.8195
www.rimarchitects.com

RSA ENGINEERING, INC
Mechanical and Electrical Consulting Engineers
670 West Fireweed Lane, Suite 200
Anchorage, AK 99503
(907) 276-0521
Corporate No.: AECC542

STATE OF ALASKA 49TH AUSTIN R. MCCLESKEY ME-124904 4/16/19 REGISTERED PROFESSIONAL ENGINEER

100% CONST DOCUMENTS

PROJECT TITLE: HILAND MOUNTAIN CORRECTIONAL CENTER ROOF REPAIR
ADDRESS: 9101 HESTERBERG ROAD EAGLE RIVER, AK 99577
OWNER: ALASKA DEPARTMENT OF CORRECTIONS
SHEET TITLE: LEGENDS, ABBREVIATIONS, AND SPECIFICATIONS

NO	DESCRIPTION	DATE

DATE	2019.04.16
PROJECT NO :	L9057
DRAWN BY :	DRM
CHECKED BY :	RRD

CORPORATE NO. AECL 1227

DWG NO:
HUM.1

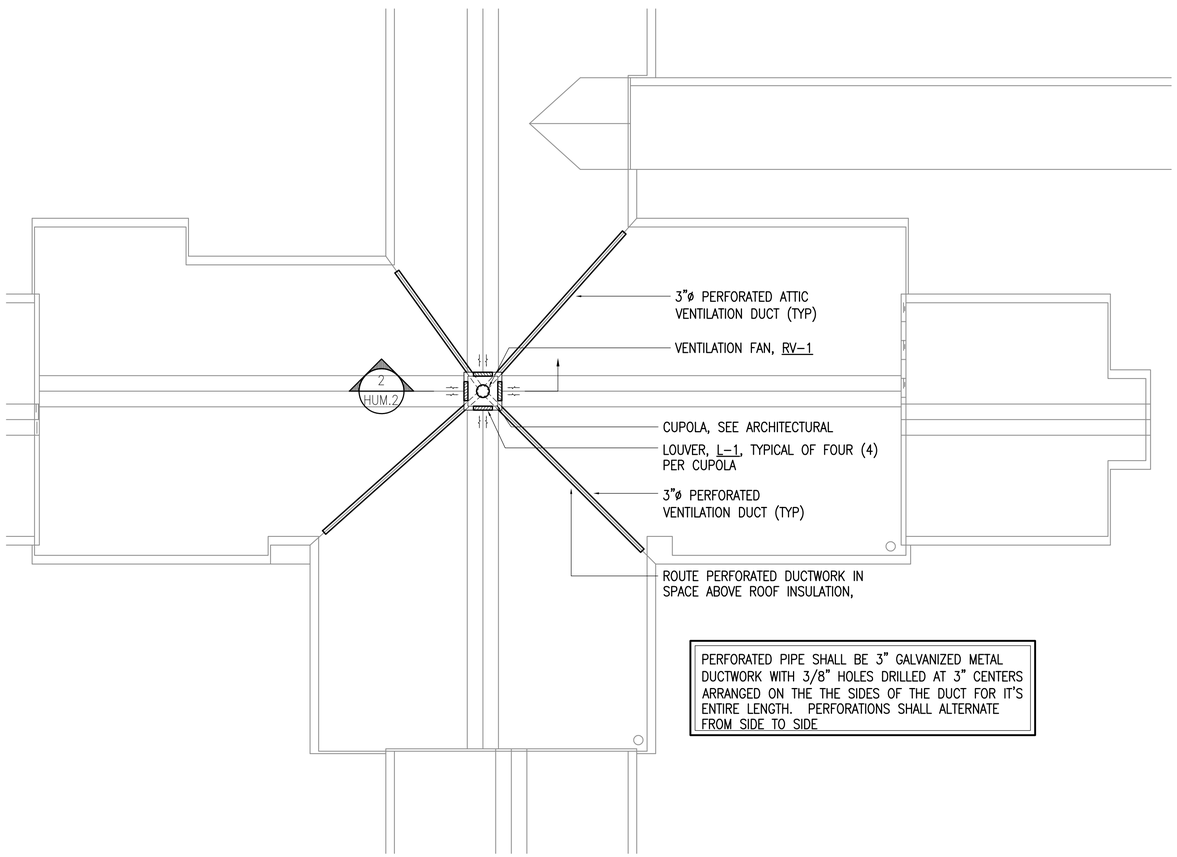

PERFORATED PIPE SHALL BE 3" GALVANIZED METAL DUCTWORK WITH 3/8" HOLES DRILLED AT 3" CENTERS ARRANGED ON THE THE SIDES OF THE DUCT FOR IT'S ENTIRE LENGTH. PERFORATIONS SHALL ALTERNATE FROM SIDE TO SIDE

1 BASE BID PLAN - ROOF VENT FAN

1/8" = 1'-0"

NOTE: ALTERNATE #1 SIMILAR

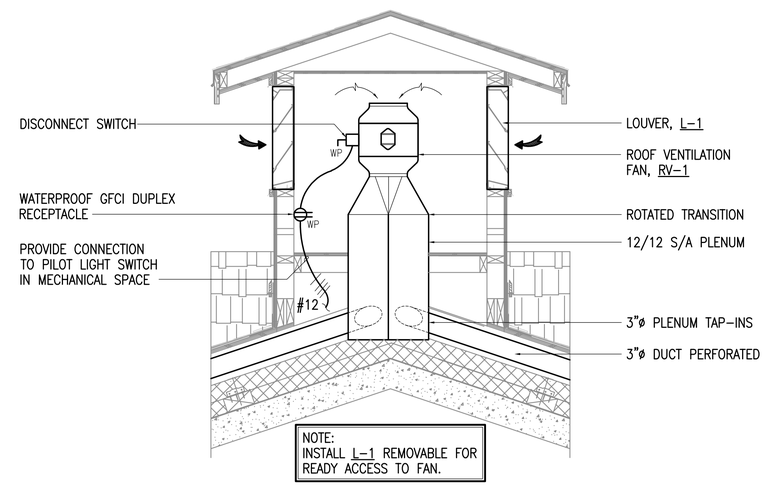

NOTE:
INSTALL L-1 REMOVABLE FOR READY ACCESS TO FAN.

2 SECTION - BASE BID ROOF VENT FAN

NOT TO SCALE

NOTE: ALTERNATE #1 SIMILAR

RIM ARCHITECTS

645 'G' STREET, SUITE 400
ANCHORAGE, ALASKA 99501
Phone: 907.258.7777
Fax: 907.279.8195

www.rimarchitects.com

RSA ENGINEERING, INC
Mechanical and Electrical Consulting Engineers
670 West Fireweed Lane, Suite 200
Anchorage, AK 99503
(907) 276-0521
Corporate No.: AECC542

STATE OF ALASKA
AUSTIN R. MCELHERAN
ME-124904
6/26/19
REGISTERED PROFESSIONAL ENGINEER

100% CONST DOCUMENTS

PROJECT TITLE: HILAND MOUNTAIN CORRECTIONAL CENTER ROOF REPAIR
ADDRESS: 9101 HESTERBERG ROAD EAGLE RIVER, AK 99577
OWNER: ALASKA DEPARTMENT OF CORRECTIONS
SHEET TITLE: TYPICAL ATTIC VENTILATION PLAN

NO	DESCRIPTION	DATE

DATE	2019.04.16
PROJECT NO :	L9057
DRAWN BY :	DRM
CHECKED BY :	RRD

CORPORATE NO. AECL 1227

DWG NO:
HUM.2

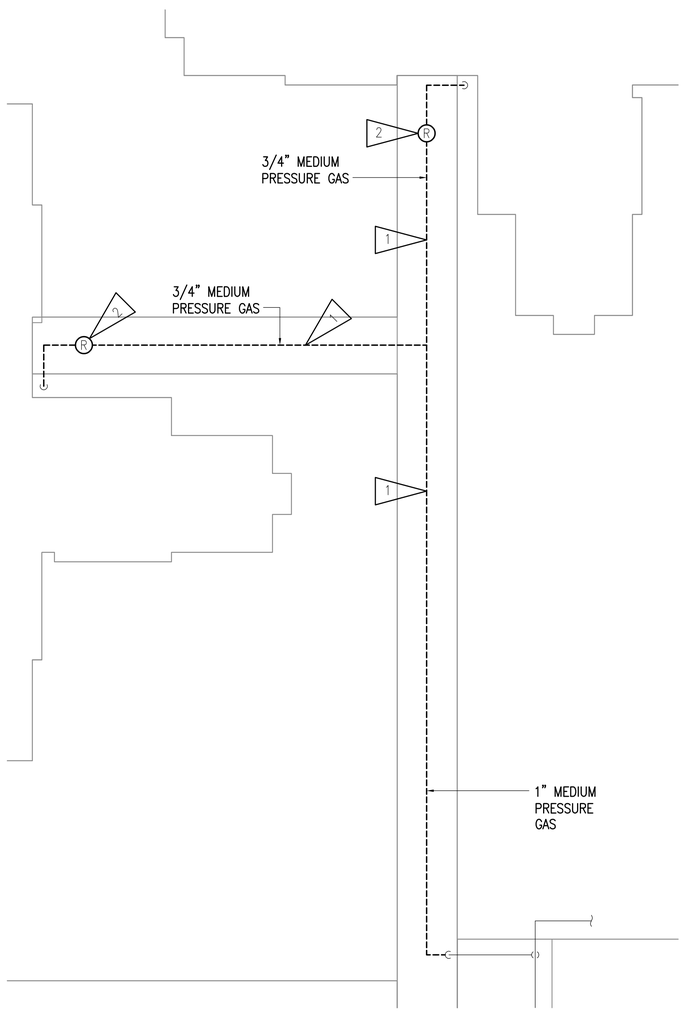

2 HOUSE 3 & 4 WALKWAYS - ALTERNATE 2
1/16" = 1'-0"

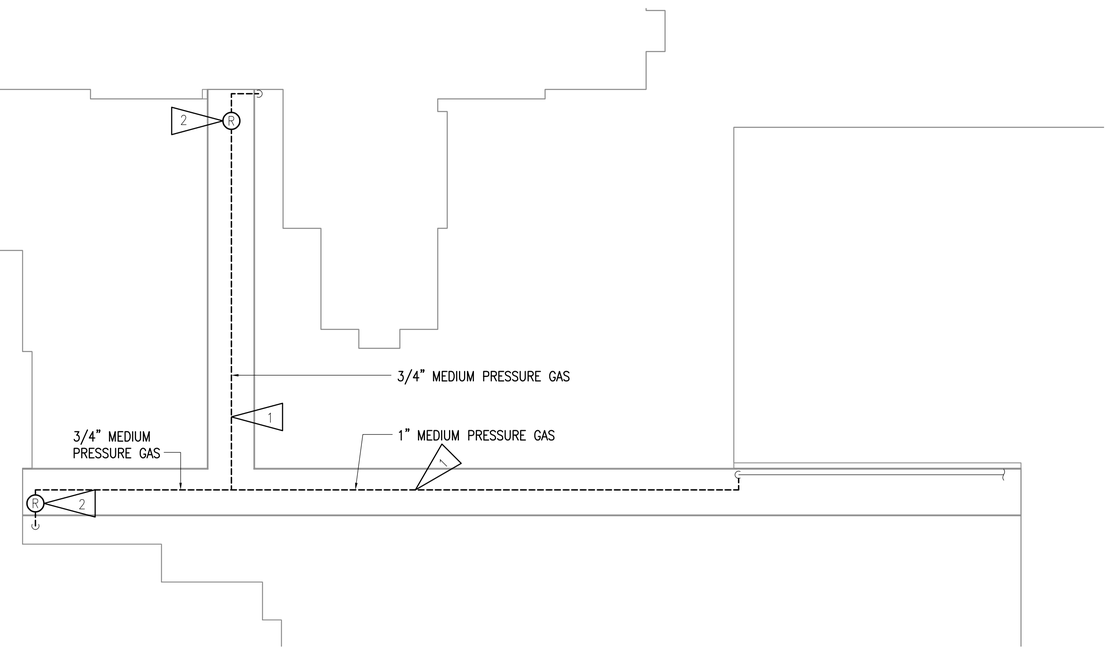

1 HOUSE 1 & 2 WALKWAYS - ALTERNATE 3
1/16" = 1'-0"

SHEET NOTES:

1. SALVAGE AND STORE EXISTING GAS PIPE.
2. SALVAGE AND STORE EXISTING GAS REGULATOR.

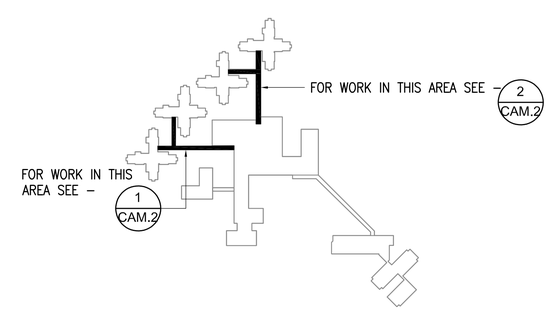

KEYPLAN

RIM ARCHITECTS

645 'G' STREET, SUITE 400
ANCHORAGE, ALASKA 99501
Phone: 907.258.7777
Fax: 907.279.8195

www.rimarchitects.com

RSA ENGINEERING, INC
Mechanical and
Electrical Consulting
Engineers
670 West Fireweed Lane, Suite 200
Anchorage, AK 99503
(907) 276-0521
Corporate No.: AECC542

STATE OF ALASKA
AUSTIN R. MCCLESKEY
ME-124904
4/16/19
REGISTERED PROFESSIONAL ENGINEER

100% CONST DOCUMENTS

PROJECT TITLE: HILAND MOUNTAIN CORRECTIONAL CENTER ROOF REPAIR
ADDRESS: 9101 HESTERBERG ROAD EAGLE RIVER, AK 99577
OWNER: ALASKA DEPARTMENT OF CORRECTIONS
SHEET TITLE: WALKWAY DEMOLITION PLANS

NO	DESCRIPTION	DATE

DATE	2019.04.16
PROJECT NO :	L9057
DRAWN BY :	DRM
CHECKED BY :	RRD

CORPORATE NO. AECL 1227

DWG NO:
CAM.1

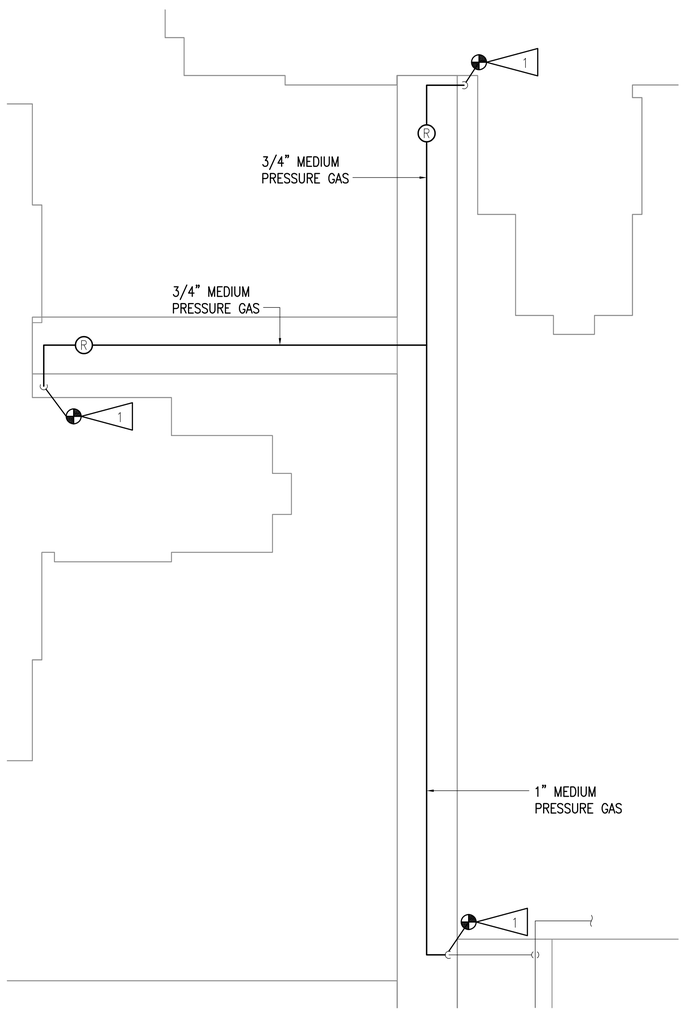

2 HOUSE 3 & 4 WALKWAYS - ALTERNATE 2
1/16" = 1'-0"

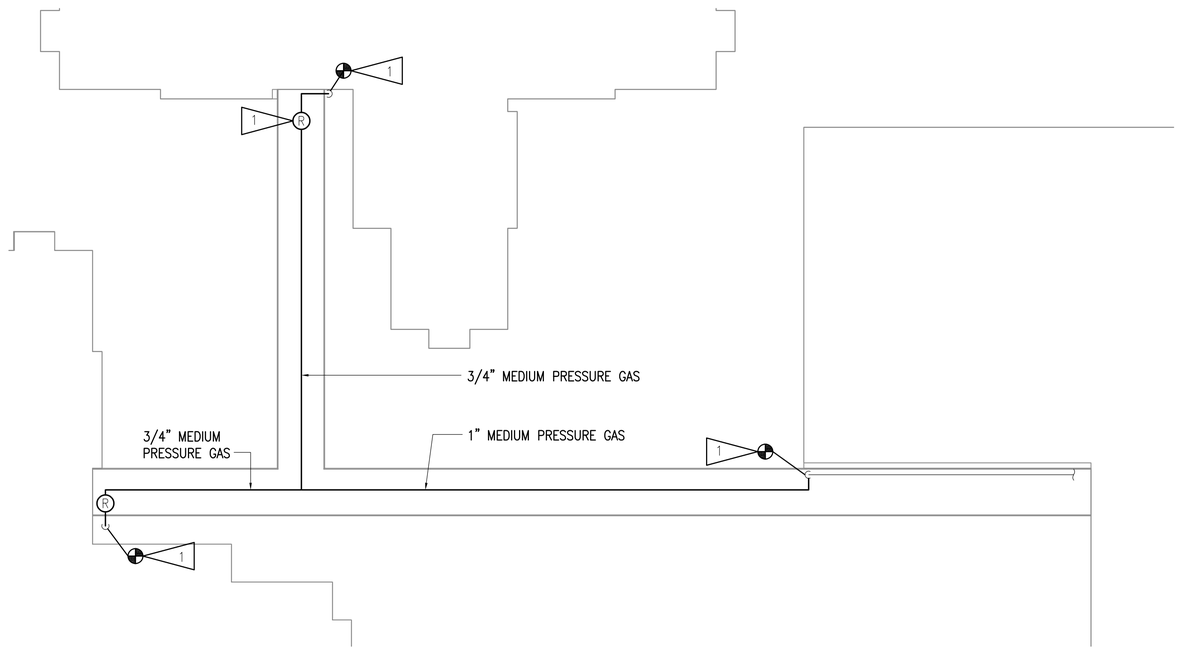

1 HOUSE 1 & 2 WALKWAYS - ALTERNATE 3
1/16" = 1'-0"

SHEET NOTES:

1 CONNECT SALVAGED GAS PIPING AND REGULATOR TO EXISTING. SEE ARCHITECTURAL FOR PIPE SUPPORT DETAIL.

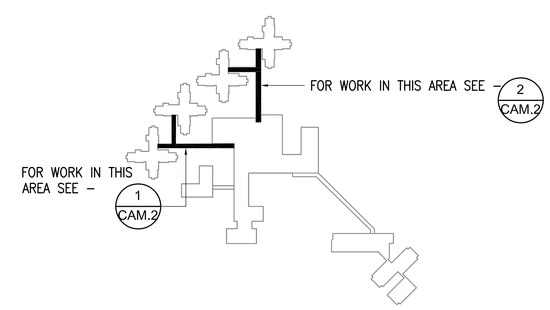

KEYPLAN

RIM ARCHITECTS

645 'G' STREET, SUITE 400
ANCHORAGE, ALASKA 99501
Phone: 907.258.7777
Fax: 907.279.8195

www.rimarchitects.com

RSA ENGINEERING, INC
Mechanical and Electrical Consulting Engineers
670 West Fireweed Lane, Suite 200
Anchorage, AK 99503
(907) 276-0521
Corporate No.: AECC542

STATE OF ALASKA
AUSTIN R. MCCLESKEY
ME-124904
4/16/19
REGISTERED PROFESSIONAL ENGINEER

100% CONST DOCUMENTS

PROJECT TITLE: HILAND MOUNTAIN CORRECTIONAL CENTER ROOF REPAIR
ADDRESS: 9101 HESTERBERG ROAD EAGLE RIVER, AK 99577
OWNER: ALASKA DEPARTMENT OF CORRECTIONS
SHEET TITLE: WALKWAY REMODEL PLAN

NO	DESCRIPTION	DATE

DATE	2019.04.16
PROJECT NO :	L9057
DRAWN BY :	DRM
CHECKED BY :	RRD

CORPORATE NO. AECL 1227

DWG NO:
CAM.2

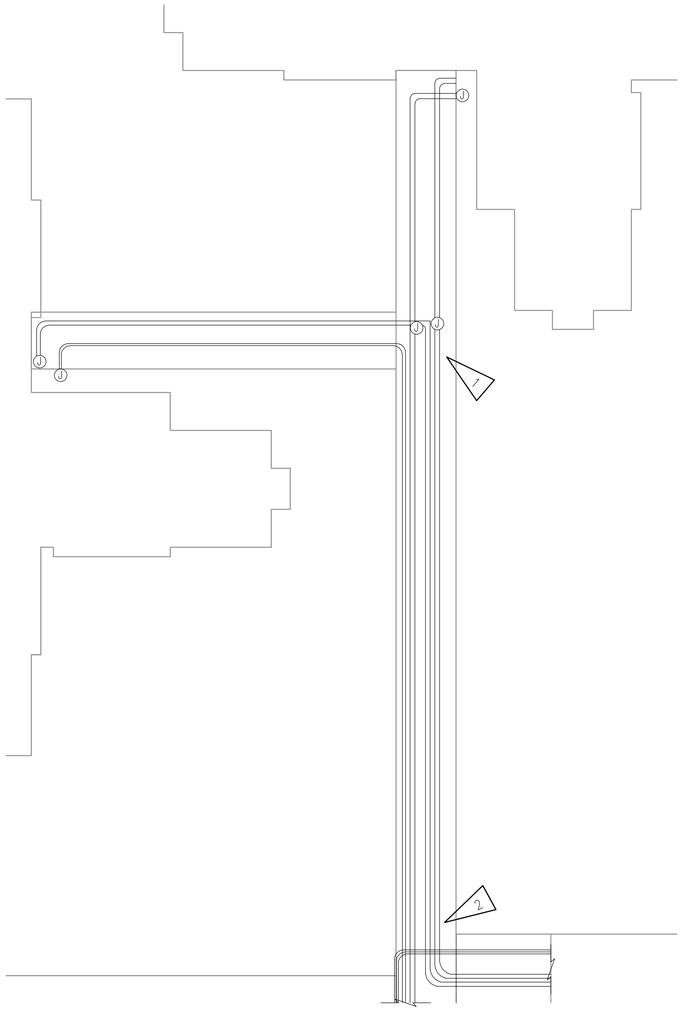

2 HOUSE 3 & 4 ALTERNATE 2
1/16" = 1'-0"

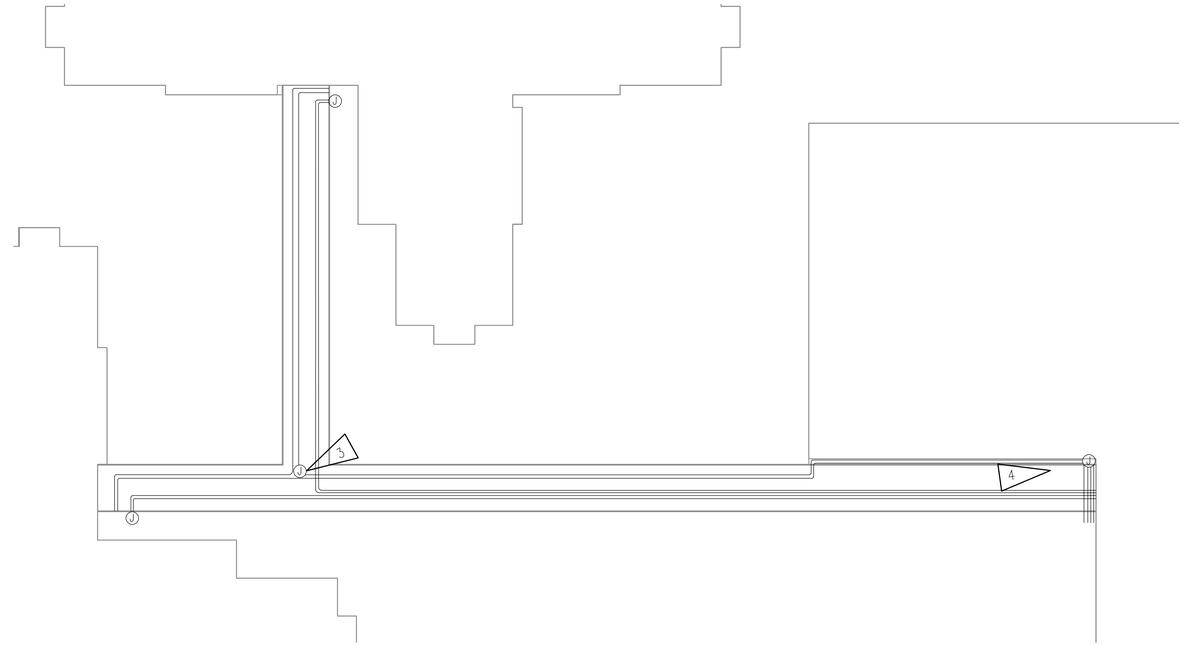

1 HOUSE 1 & 2 CANOPY ROOF ALTERNATE 3
1/16" = 1'-0"

GENERAL NOTES:

A. THE INFORMATION SHOWN ON THIS DRAWING IS FROM A NON–DESTRUCTIVE WALK THROUGH OF THE FACILITY. THERE IS NO WARRANTY OR GUARANTEE AS TO THE ACCURACY OF THE INFORMATION SHOWN HERE–IN.

B. ALL CONDUITS AND CIRCUITS ABOVE CANOPY TO REMAIN FULLY OPERATIONAL AND IN SERVICE DURING THE ENTIRE PROJECT.

C. EXISTING CONDUITS ARE SUPPORTED FROM PRESSURE TREATED WOOD MOUNTED TO THE TOP OF THE CANOPY. PROVIDE TEMPORARY CONDUIT SUPPORT TO MAINTAIN SERVICE OF CONDUITS DURING CANOPY ROOF RESURFACING. PROVIDE PHYSICAL PROTECTION TO PROTECT CONDUITS FROM DAMAGE. SEE ARCHITECTURAL PLANS FOR NEW CONDUIT SUPPORTS.

D. PLANS ARE DIAGRAMMATIC AND SHOW AN APPROXIMATE NUMBER OF CONDUITS. REFER TO PHOTOS AND ACTUAL SITE CONDITIONS FOR EXACT NUMBER AND LAYOUT OF EXISTING CONDUITS.

SHEET NOTES:

1. SEE PHOTO ON SHEET 1/CAE.2. TEMPORARILY SUPPORT JUNCTION BOXES AND CONDUITS AS NECESSARY TO PERFORM ROOF WORK.

2. SEE PHOTO ON SHEET 2/CAE.2. TEMPORARILY SUPPORT CONDUITS AS NECESSARY TO PERFORM ROOF WORK.

3. SEE PHOTO ON SHEET 3/CAE.2. TEMPORARILY SUPPORT JUNCTION BOXES AND CONDUITS AS NECESSARY TO PERFORM ROOF WORK.

4. SEE PHOTO ON SHEET 4/CAE.2. TEMPORARILY SUPPORT JUNCTION BOXES AND CONDUITS AS NECESSARY TO PERFORM ROOF WORK.

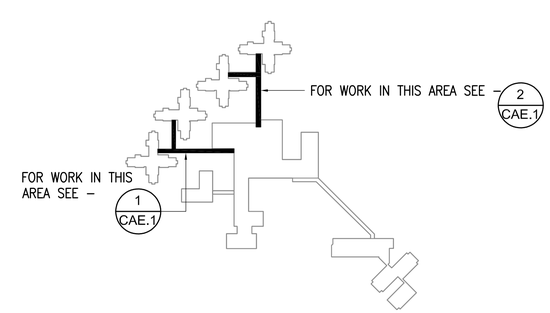

KEYPLAN

RIM ARCHITECTS

645 'G' STREET, SUITE 400
ANCHORAGE, ALASKA 99501
Phone: 907.258.7777
Fax: 907.279.8195

www.rimarchitects.com

RSA ENGINEERING, INC
Mechanical and Electrical Consulting Engineers
670 West Fireweed Lane, Suite 200
Anchorage, AK 99503
(907) 276-0521
Corporate No.: AECC542

STATE OF ALASKA 14 OTH ROGER L. WEESE EE-10493 4-16-19 REGISTERED PROFESSIONAL ENGINEER

100% CONST DOCUMENTS

PROJECT TITLE: HILAND MOUNTAIN CORRECTIONAL CENTER ROOF REPAIR
ADDRESS: 9101 HESTERBERG ROAD EAGLE RIVER, AK 99577
OWNER: ALASKA DEPARTMENT OF CORRECTIONS
SHEET TITLE: ELECTRICAL PLANS

NO	DESCRIPTION	DATE

DATE	2019.04.16
PROJECT NO :	L9057
DRAWN BY :	MSS
CHECKED BY :	RLW,CPL

CORPORATE NO. AECL 1227

DWG NO:
CAE.1

1 PHOTO #1 LOOKING NORTH
1/16" = 1'-0"

2 PHOTO #2 LOOKING SOUTH
1/16" = 1'-0"

3 PHOTO #3 LOOKING WEST
1/16" = 1'-0"

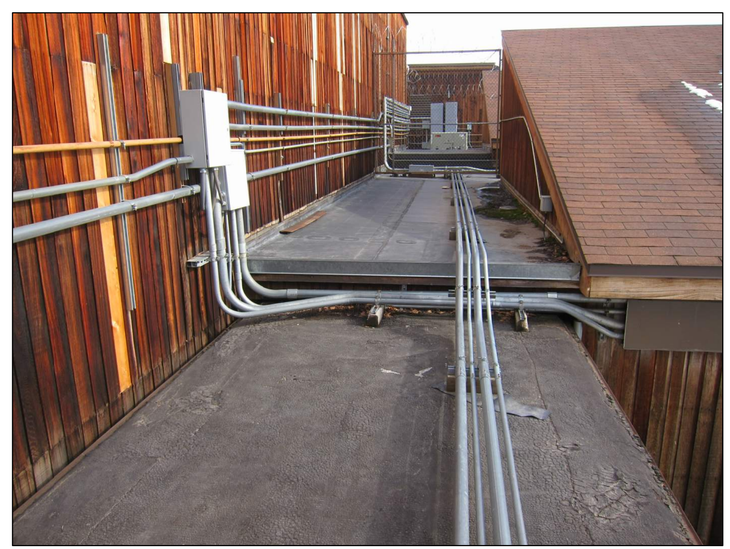

4 PHOTO #4 LOOKING EAST
1/16" = 1'-0"

ELECTRICAL SPECIFICATIONS

26 05 00 – COMMON WORK RESULTS FOR ELECTRICAL

A. SCOPE OF WORK: KEEP ELECTRICAL SYSTEM AS INDICATED ON THE DRAWINGS AND IN THESE SPECIFICATIONS WITHOUT INTERRUPTIONS AND SHUTDOWN.
B. STANDARDS, CODES AND REGULATIONS: COMPLY WITH THE LATEST ADOPTED EDITION OF THE NATIONAL ELECTRICAL CODE, INTERNATIONAL BUILDING CODE, AND INTERNATIONAL FIRE CODE INCLUDING ALL STATE AND LOCAL AMENDMENTS TO THESE CODES. COMPLY WITH THE LATEST PUBLISHED VERSION OF THE NECA STANDARD OF INSTALLATION.
C. DRAWINGS: THE DRAWINGS ARE DIAGRAMMATIC, NOT NECESSARILY SHOWING ALL OFFSETS OR EXACT LOCATIONS OF FIXTURES, EQUIPMENT, ETC. UNLESS SPECIFICALLY DIMENSIONED. REVIEW THE DRAWINGS AND SPECIFICATIONS FOR EQUIPMENT FURNISHED BY OTHER CRAFTS BUT INSTALLED IN ACCORDANCE WITH THIS SECTION. BRING QUESTIONABLE OR OBSCURE ITEMS, APPARENT CONFLICTS BETWEEN PLANS AND SPECIFICATIONS, GOVERNING CODES OR UTILITIES REGULATIONS TO THE ATTENTION OF THE OWNER. CODES, ORDINANCES, REGULATIONS, MANUFACTURER'S INSTRUCTIONS OR STANDARDS TAKE PRECEDENCE WHEN THEY ARE MORE STRINGENT OR CONFLICT WITH THE DRAWINGS AND SPECIFICATIONS.
D. WORKMANSHIP: INSTALLATION OF ALL WORK SHALL BE MADE SO THAT ITS SEVERAL COMPONENT PARTS SHALL FUNCTION AS A WORKABLE SYSTEM COMPLETE WITH ALL ACCESSORIES NECESSARY FOR ITS OPERATION. ALL MATERIAL AND EQUIPMENT SHALL BE INSTALLED IN ACCORDANCE WITH THE MANUFACTURER'S RECOMMENDATIONS, INSTRUCTIONS AND/OR INSTALLATION DRAWINGS AND IN ACCORDANCE WITH NECA STANDARDS. MATERIALS AND EQUIPMENT SHALL BE NEW AND SHALL CONFORM WITH APPLICABLE INDUSTRY STANDARDS, NEMA STANDARDS AND UNDERWRITERS LABORATORIES STANDARDS WHERE APPLICABLE.
E. WARRANTY: THE CONTRACTOR SHALL GUARANTEE ALL WORK EXECUTED UNDER THIS CONTRACT TO BE FREE FROM DEFECTS IN MATERIALS AND WORKMANSHIP FOR A PERIOD OF ONE YEAR FROM BENEFICIAL OCCUPANCY. ANY FAULTY MATERIALS OR WORKMANSHIP SHALL BE REPAIRED OR REPLACED TO THE SATISFACTION OF THE OWNER DURING THE GUARANTEE PERIOD.
F. PERMITS: SECURE AND PAY FOR ALL FEES, PERMITS, ETC. REQUIRED BY LOCAL AND STATE AGENCIES.
G. REFERENCE SYMBOLS: THE ELECTRICAL "LEGEND" ON THE DRAWINGS IS A STANDARDIZED VERSION, AND ALL SYMBOLS SHOWN MAY NOT BE USED. USE THE "LEGEND" AS A REFERENCE FOR THE SYMBOLS USED ON THE DRAWINGS.

26 05 05 – SELECTIVE DEMOLITION FOR ELECTRICAL

A. DEMOLITION DRAWINGS ARE BASED ON CASUAL FIELD OBSERVATION. REPORT DISCREPANCIES TO OWNER ARCHITECT/ENGINEER BEFORE DISTURBING THE EXISTING INSTALLATION. ALL ELECTRICAL EQUIPMENT (TELEPHONE, FIRE ALARM, LIGHTING, ELECTRICAL SERVICE, ETC.) TO REMAIN IN SERVICE DURING CONSTRUCTION.

26 05 29 – HANGERS AND SUPPORTS FOR ELECTRICAL SYSTEMS

A. SUBMITTALS: NONE REQUIRED FOR THIS SECTION.
B. MATERIAL: SEE ARCHITECTURAL DETAIL FOR SUPPORT TYPE.
C. INSTALLATION: EQUIPMENT WEIGHING MORE THAN 50 POUNDS SHALL BE ADEQUATELY ANCHORED TO THE BUILDING STRUCTURE TO RESIST LATERAL EARTHQUAKE FORCES.

RIM ARCHITECTS

645 'G' STREET, SUITE 400
ANCHORAGE, ALASKA 99501
Phone: 907.258.7777
Fax: 907.279.8195

www.rimarchitects.com

RSA ENGINEERING, INC
Mechanical and Electrical Consulting Engineers
670 West Fireweed Lane, Suite 200
Anchorage, AK 99503
(907) 276-0521
Corporate No.: AECC542

STATE OF ALASKA
14 OTH
ROGER L. WEESE
EE-9463
5.16.19
REGISTERED PROFESSIONAL ENGINEER

100% CONST DOCUMENTS

PROJECT TITLE: HILAND MOUNTAIN CORRECTIONAL CENTER ROOF REPAIR
ADDRESS: 9101 HESTERBERG ROAD EAGLE RIVER, AK 99577
OWNER: ALASKA DEPARTMENT OF CORRECTIONS
SHEET TITLE: ELECTRICAL PHOTOS

NO	DESCRIPTION	DATE

DATE	2019.04.16
PROJECT NO :	L9057
DRAWN BY :	MSS
CHECKED BY :	RLW,CPL

CORPORATE NO. AECL 1227

DWG NO:
CAE.2