ALASKA RAILROAD CORPORATION

RAINBOW

SSS RAINBOW M.P. 93.06 | NSS RAINBOW M.P. 93.28

MANUAL MONITORED SWITCH

NOTES:

1. ALL WIRING IN BUNGALOW TO BE #16 AWG FLEX UNLESS OTHERWISE NOTED.

LEGEND:

- EQUALIZER (2)
- LINE ARRESTER
- CLEARVIEW ARRESTOR W/ BAKELITE BASE (3)
- CLEARVIEW ARRESTOR W/ 3 POST PORCELAIN BASE (4)
- (R) NO 6 AWG THNN/THWN FLEX WIRE WITH RED SHEATH (B12)
- (B) NO 6 AWG THNN/THWN FLEX WIRE WITH BLACK SHEATH (N12)
- (G) NO 6 AWG THNN/THWN FLEX WIRE WITH GREEN SHEATH (SAFETY GROUND)
- 6 TWISTED WIRE TWO TURNS PER FOOT
- (#) MATERIAL REFERENCE IDENTIFICATION NUMBER
- [#] PTC DEVICE COUNT NUMBER

OS INSTALL
COLORED PLANS

RED = -O- = IN
YELLOW = -X- = OUT

REVISIONS

The ALASKA RAILROAD CORPORATION
SIGNAL ENGINEERING — P.O. BOX 107500 , ANCHORAGE , ALASKA 99510-7500

RAINBOW
SSS RAINBOW M.P. 93.06 | NSS RAINBOW M.P. 93.28
MANUAL MONITORED SWITCH

DRAWN: *RLB* DATE: 05-07-12	DWG NO. 009306-009328	0 SHEET OF 58

009328_00.dwg 08-16-17

BURNS ENG. REVISIONS

AS DESIGNED-0.00 PTC OS INSTALLATION

SCALE:	INITIAL	DATE
DESIGNED:	WAW	08-16-17
CHECKED:	ES	08-17-17
BACK-CHECKED:	WAW	08-17-17
CORRECTED:	WAW	08-17-17
VERIFIED:	ES	08-17-17

AS DESIGNED-0.01 PTC OS INSTALLATION

SCALE:	INITIAL	DATE
DESIGNED:	SLF	10-16-17
CHECKED:	WDW	10-16-17
BACK-CHECKED:	SLF	10-16-17
CORRECTED:	SLF	10-16-17
VERIFIED:	WDW	10-16-17

RAINBOW

THE Burns GROUP ENGINEERING AND CONSTRUCTION

SHEET NUMBER REF. 0
DRAWING NUMBER REF. 009306-009328
BURNS PROJECT REF. 2017-159

DRAWING NO.	DESCRIPTION	REVISION DATE			
009328-0	TITLE SHEET				
009328-1	INDEX	*			
009328-2	TRACK LAYOUT	*			
009328-3	PTC SYSTEMS ARCHITECTURE	*			
009328-4	PTC SYSTEMS ARCHITECTURE				
009328-5	SWITCH CONTROL CIRCUITS (A SWITCH)				
009328-6	SWITCH CONTROL CIRCUITS (B SWITCH)				
009328-7	SPARE				
009328-8	ELECTROBLOX WIU, VIO & IMG-2 INTERFACE	*			
009328-9	PSO 4000 SOST CIRCUITS				
009328-10	PSO 4000 SOSAT CIRCUITS				
009328-11	PSO 4000 NOST CIRCUITS				
009328-12	PSO 4000 NOSAT CIRCUITS				
009328-13	SSS RAINBOW CIRCUITS				
009328-14	NSS RAINBOW CIRCUITS				
009328-15	SOLAR / WIND TURBINE CIRCUITS				
009328-16	SOLAR / WIND TURBINE CONTROLLER CIRCUITS				
009328-17	POWER DISTRIBUTION CIRCUITS	*			
009328-18	SOLAR / WIND TURBINE LAYOUT	*			
009328-19	TERMINAL DETAILS	*			
009328-20	BUNGALOW SIDE "A" LAYOUT	*			
009328-21	BUNGALOW SIDE "B" LAYOUT	*			
009328-22	BUNGALOW SIDE "C" LAYOUT	*			
009328-23	BUNGALOW SIDE "D" LAYOUT				
009328-24	SPARE				
009328-25	OS ENCLOSURE LAYOUT				
009328-26	SSS RAINBOW SWITCH POINT/CLEARANCE ENCLOSURE LAYOUT				
009328-27	NSS RAINBOW SWITCH POINT ENCLOSURE LAYOUT				
009328-28	SPARE				
009328-29	ROLL OUT PROTECTION CIRCUITS				
009328-30	SPARE				
009328-31	SPARE				
009328-32	SPARE				
009328-33	B12 BATTERY CIRCUITS				
009328-34	SPARE				

DRAWING NO.	DESCRIPTION	REVISION DATE			
009328-35	ULTRA AMI CIRCUITS (SOFC)				
009328-36	IMG-2 INTERFACE				
009328-37	PTC CONFIGURATION TABLES				
009328-38	COMMUNICATION CIRCUITS - ITC / CARLSON RADIOS				
009328-39	SPARE				
009328-40	SPARE				
009328-41	NETGUARDIAN INTERFACE - M16 G2 UNIT	*			
009328-42	NETGUARDIAN INTERFACE - CONTROLLER EXT. BOX				
009328-43	NETGUARDIAN INTERFACE - D-WIRE EXPANSION UNIT	*			
009328-44	SW CURRENT SENSORS / DOOR ALARM CIRCUIT	*			
009328-45	TR CURRENT SENSORS				
009328-46	RU6 RACK LAYOUT				
009328-47	COMMUNICATION CIRCUITS - RSG2100 / FUSE BLK 1				
009328-48	COMMUNICATION CIRCUITS - FUSE BLK 2				
009328-49	SPARE				
009328-50	UNDERGROUND CABLE LAYOUT	*			
009328-51	OS BILL OF MATERIALS				
009328-52	BILL OF MATERIALS				
009328-53	BILL OF MATERIALS				
009328-54	SPARE				
009328-55	SPARE				
009328-56	PTC BILL OF MATERIALS				
009328-57	PTC BILL OF MATERIALS				
009328-58	SPARE				

NOTES:

1. * = OS REVISIONS

REVISIONS

				AS DESIGNED-0.00 08-16-17 OS INSTALLATION PTC SYSTEM DES:BE/WAW CHK:BE/ES	AS IN SERVICE 03-22-17 INSTALL IETMS PTC SYSTEM DES:BE/WAW CHK:BE/ES

The ALASKA RAILROAD CORPORATION

SIGNAL ENGINEERING P.O. BOX 107500 , ANCHORAGE , ALASKA 99510-7500

RAINBOW

SSS RAINBOW M.P. 93.06 | NSS RAINBOW M.P. 93.28

MANUAL MONITORED SWITCH

DRAWN: *RLB*
DATE: 05-07-12

DWG NO. 009306-009328

SHEET 1 OF 58

009328_01.dwg 08-16-17

BURNS ENG. REVISIONS

AS DESIGNED-0.00 PTC OS INSTALLATION	SCALE:		
		INITIAL	DATE
	DESIGNED:	WAW	08-16-17
	CHECKED:	ES	08-17-17
	BACK-CHECKED:	WAW	08-17-17
	CORRECTED:	WAW	08-17-17
	VERIFIED:	ES	08-17-17

AS DESIGNED-0.01 PTC OS INSTALLATION	SCALE:		
		INITIAL	DATE
	DESIGNED:	SLF	10-16-17
	CHECKED:	WDW	10-16-17
	BACK-CHECKED:	SLF	10-16-17
	CORRECTED:	SLF	10-16-17
	VERIFIED:	WDW	10-16-17

RAINBOW

THE Burns GROUP
ENGINEERING AND CONSTRUCTION

SHEET NUMBER REF. 1

DRAWING NUMBER REF. 009306-009328

BURNS PROJECT REF. 2017-159

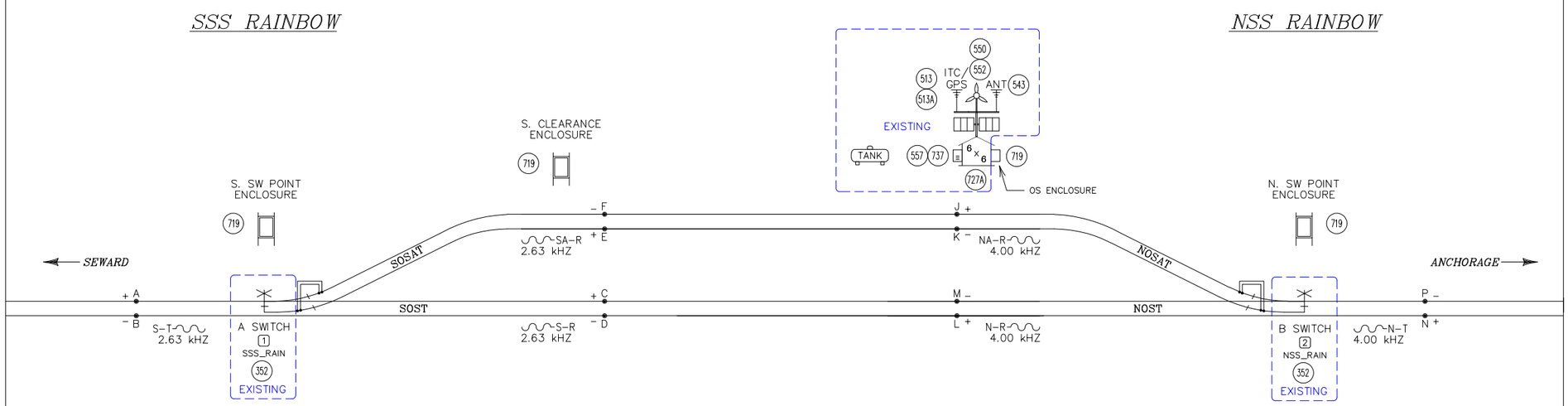

NOTES:

1. FOULING SECTIONS MUST BE CLEARLY MARKED FOR PROPER OPERATION.
2. ALL PSO LINE COUPLERS IN OUTLYING CASES SHOULD BE LOCATED WITHIN 100 FT. OF TRACK CONNECTIONS.
3. ALL PSO TUNED COUPLERS IN BUNGALOW SHOULD BE LOCATED WITHIN 300 FT. OF TRACK CONNECTIONS.

ALL NEW

EXCEPT WHERE NOTED

REVISIONS

				AS DESIGNED-0.00 08-16-17 OS INSTALLATION PTC SYSTEM DES:BE/WAW CHK:BE/ES	AS IN SERVICE 03-22-17 INSTALL IETMS PTC SYSTEM DES:BE/WAW CHK:BE/ES

The ALASKA RAILROAD CORPORATION

SIGNAL ENGINEERING P.O. BOX 107500 , ANCHORAGE , ALASKA 99510-7500

RAINBOW

SSS RAINBOW M.P. 93.06 | NSS RAINBOW M.P. 93.28

MANUAL MONITORED SWITCH

DRAWN: *RLB*
DATE: 05-07-12

DWG NO. 009306-009328

SHEET 2 OF 58

009328_02.dwg 08-16-17

BURNS ENG. REVISIONS

AS DESIGNED-0.00 PTC OS INSTALLATION

SCALE:	INITIAL	DATE
DESIGNED:	WAW	08-16-17
CHECKED:	ES	08-17-17
BACK-CHECKED:	WAW	08-17-17
CORRECTED:	WAW	08-17-17
VERIFIED:	ES	08-17-17

AS DESIGNED-0.01 PTC OS INSTALLATION

SCALE:	INITIAL	DATE
DESIGNED:	SLF	10-16-17
CHECKED:	WDW	10-16-17
BACK-CHECKED:	SLF	10-16-17
CORRECTED:	SLF	10-16-17
VERIFIED:	WDW	10-16-17

RAINBOW

THE Burns GROUP
ENGINEERING AND CONSTRUCTION

SHEET NUMBER REF. 2

DRAWING NUMBER REF. 009306-009328

BURNS PROJECT REF. 2017-159

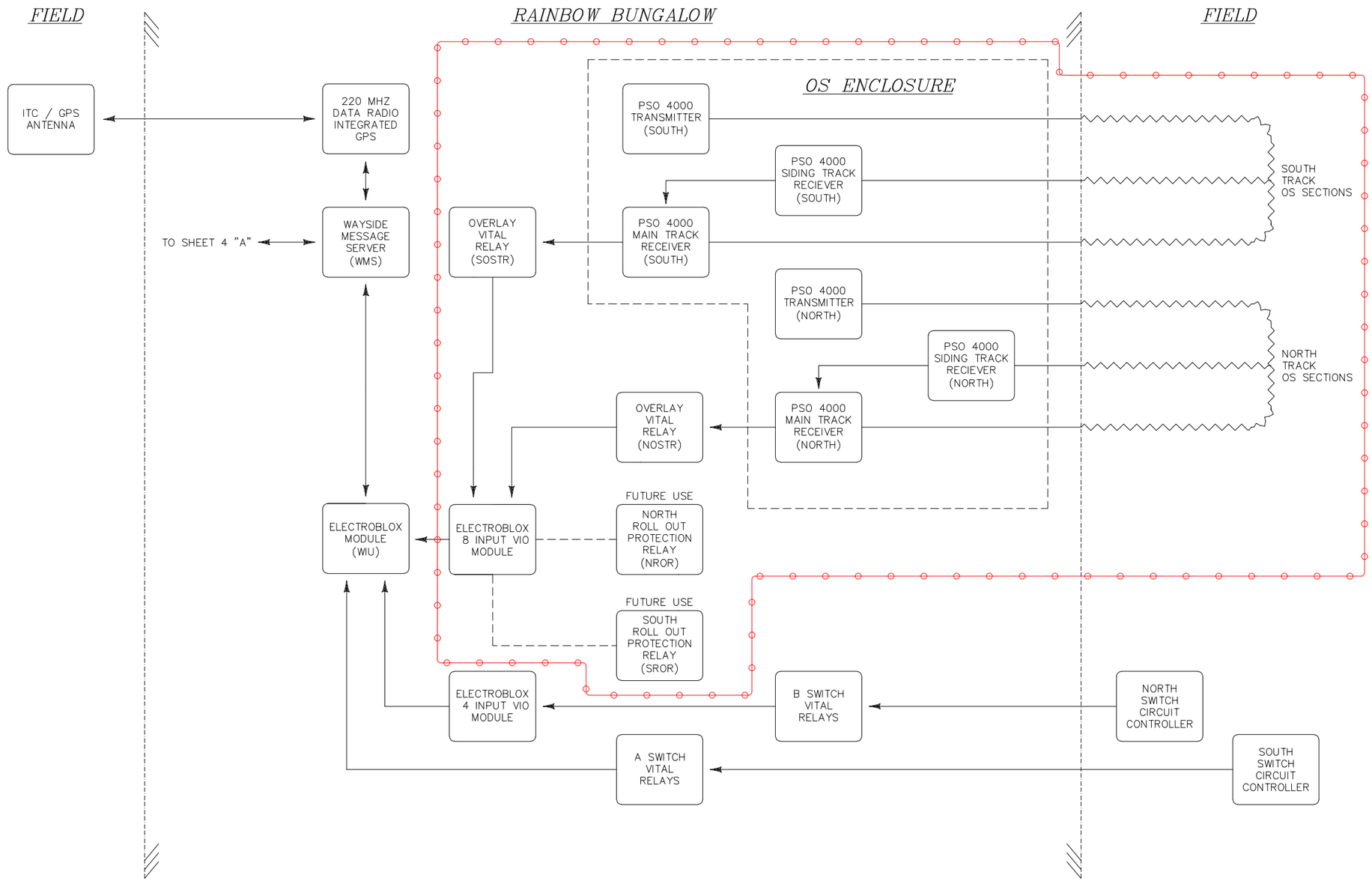

The ALASKA RAILROAD CORPORATION

SIGNAL ENGINEERING — P.O. BOX 107500 , ANCHORAGE , ALASKA 99510-7500

RAINBOW

SSS RAINBOW M.P. 93.06 | NSS RAINBOW M.P. 93.28

MANUAL MONITORED SWITCH

REVISIONS

				AS DESIGNED-0.00 08-16-17 OS INSTALLATION PTC SYSTEM DES:BE/WAW CHK:BE/ES	AS IN SERVICE 03-22-17 INSTALL IETMS PTC SYSTEM DES:BE/WAW CHK:BE/ES

DRAWN: *RLB*
DATE: 05-07-12

DWG NO. 009306-009328

SHEET 3 OF 58

009328_03.dwg 08-16-17

BURNS ENG.

REVISIONS

AS DESIGNED-0.00 PTC OS INSTALLATION

SCALE:	INITIAL	DATE
DESIGNED:	WAW	08-16-17
CHECKED:	ES	08-17-17
BACK-CHECKED:	WAW	08-17-17
CORRECTED:	WAW	08-17-17
VERIFIED:	ES	08-17-17

AS DESIGNED-0.01 PTC OS INSTALLATION

SCALE:	INITIAL	DATE
DESIGNED:	SLF	10-16-17
CHECKED:	WDW	10-16-17
BACK-CHECKED:	SLF	10-16-17
CORRECTED:	SLF	10-16-17
VERIFIED:	WDW	10-16-17

RAINBOW

THE Burns GROUP ENGINEERING AND CONSTRUCTION

SHEET NUMBER REF. 3

DRAWING NUMBER REF. 009306-009328

BURNS PROJECT REF. 2017-159

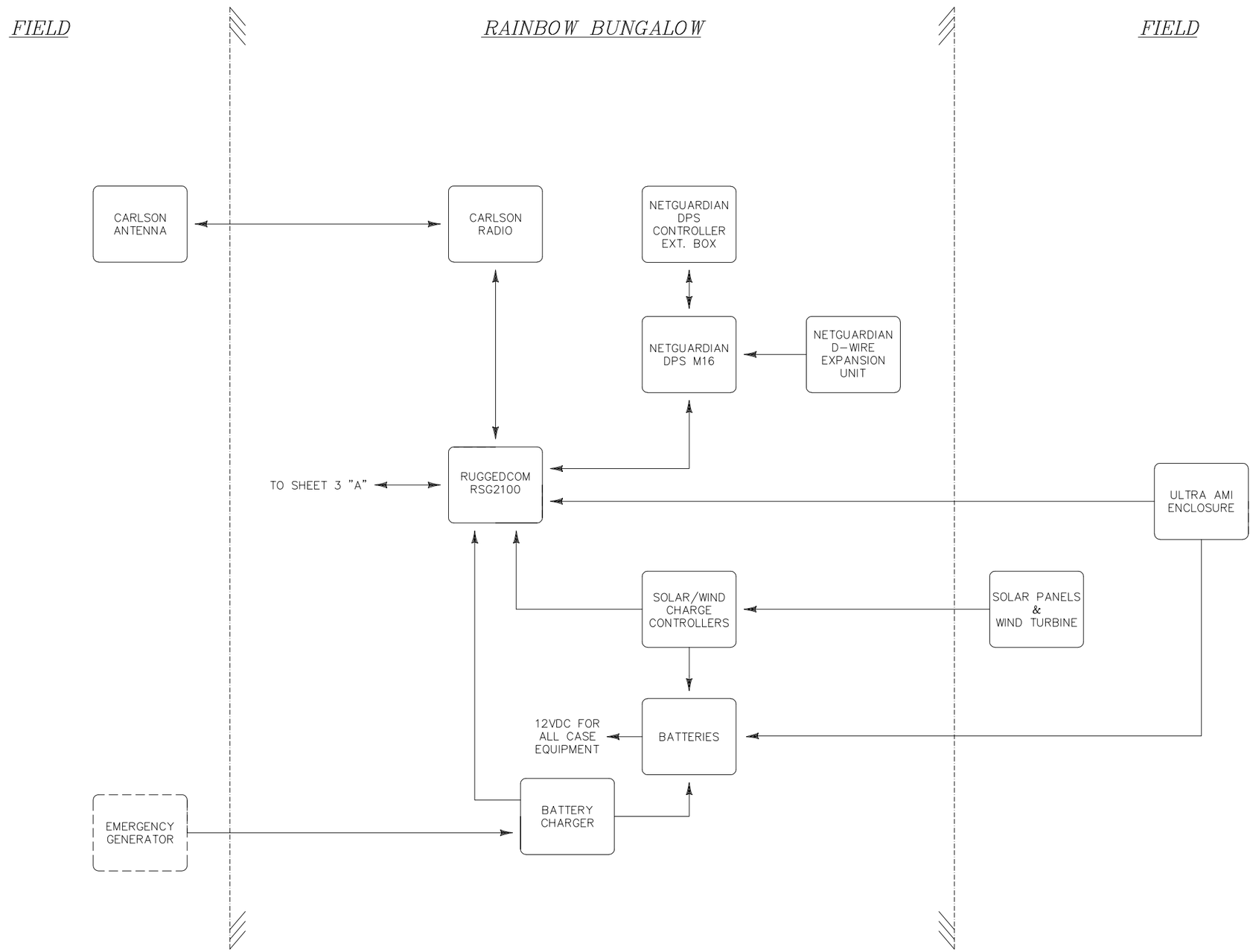

The ALASKA RAILROAD CORPORATION

SIGNAL ENGINEERING — P.O. BOX 107500 , ANCHORAGE , ALASKA 99510-7500

RAINBOW

SSS RAINBOW M.P. 93.06 | NSS RAINBOW M.P. 93.28

MANUAL MONITORED SWITCH

REVISIONS

					AS IN SERVICE 03-22-17 INSTALL IETMS PTC SYSTEM DES:BE/WAW CHK:BE/ES

DRAWN: *RLB*
DATE: 05-07-12

DWG NO. 009306-009328

SHEET 4 OF 58

009328_04.dwg 08-16-17

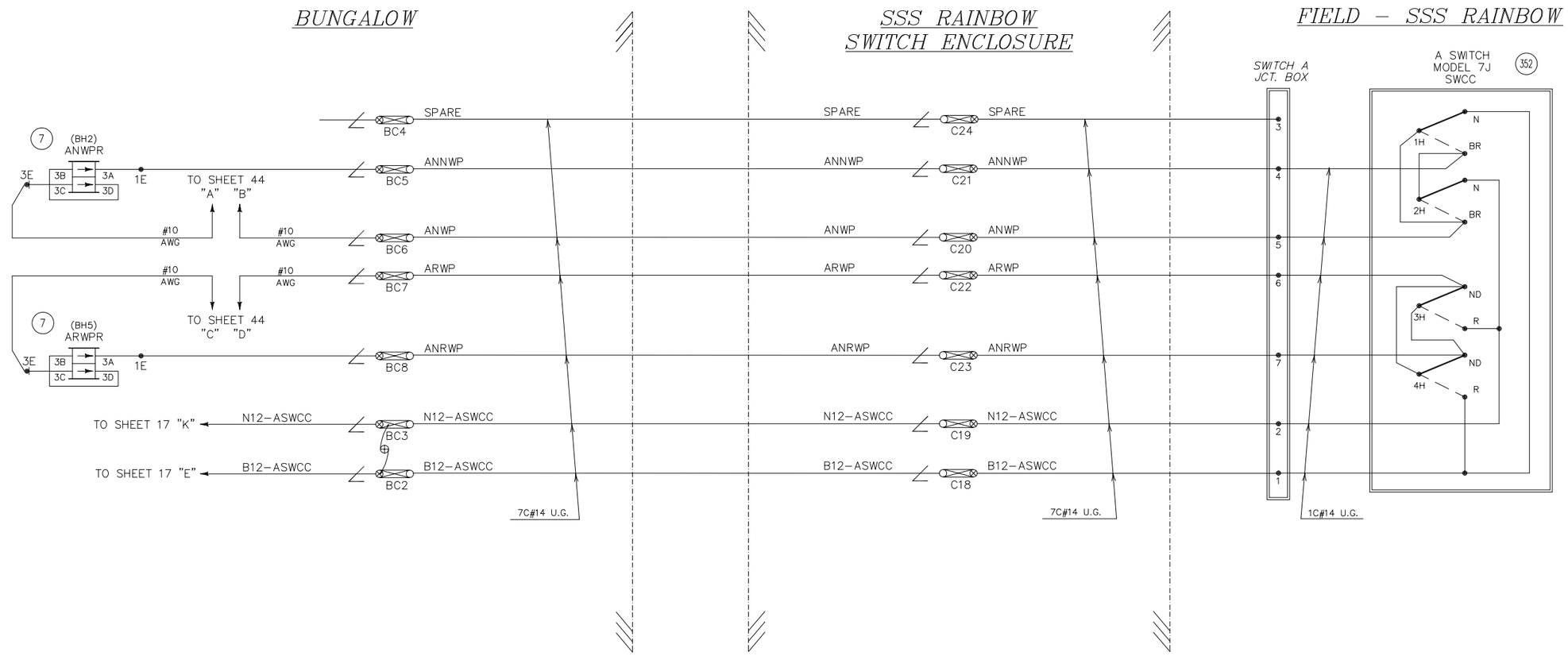

NOTES:

1. ALL WIRING TO BE #16 AWG FLEX UNLESS OTHERWISE NOTED.

2. CONTACT ASSIGNMENT:
   1 & 2 BREAK
   3 & 4 SHUNT

3. CONTACT ADJUSTMENT:
   ADJUST CONTACTS 1 & 2 SO N CONTACTS ARE JUST MADE WITH 3/16" GAUGE IN POINT.
   ADJUST CONTACTS 3 & 4 SO B–R CONTACTS ARE MADE WITH 1/4" GAUGE IN POINT.

4. SWCC LEGEND:
   N – FULL NORMAL TO, BUT NOT INCLUDING, 1/4" FROM NORMAL
   BR – 1/4" FROM NORMAL TO FULL REVERSE
   ND – 1/4" FROM REVERSE TO FULL NORMAL
   R – FULL REVERSE TO, BUT NOT INCLUDING, 1/4" FROM REVERSE

SWCC JUMPER CONFIGURATION

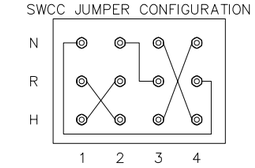

SWITCH CIRCUIT CONTROLLER LOCATED ON NORMALLY CLOSED SIDE OF SWITCH.

REVISIONS

AS IN SERVICE	03–22–17
INSTALL IETMS PTC SYSTEM	
DES:BE/WAW	CHK:BE/ES

The ALASKA RAILROAD CORPORATION
SIGNAL ENGINEERING P.O. BOX 107500 , ANCHORAGE , ALASKA 99510–7500

RAINBOW
SSS RAINBOW M.P. 93.06 | NSS RAINBOW M.P. 93.28
MANUAL MONITORED SWITCH

DRAWN: *RLB*
DATE: 05–07–12
DWG NO. 009306–009328
SHEET 5 OF 58

009328_05.dwg 08–16–17

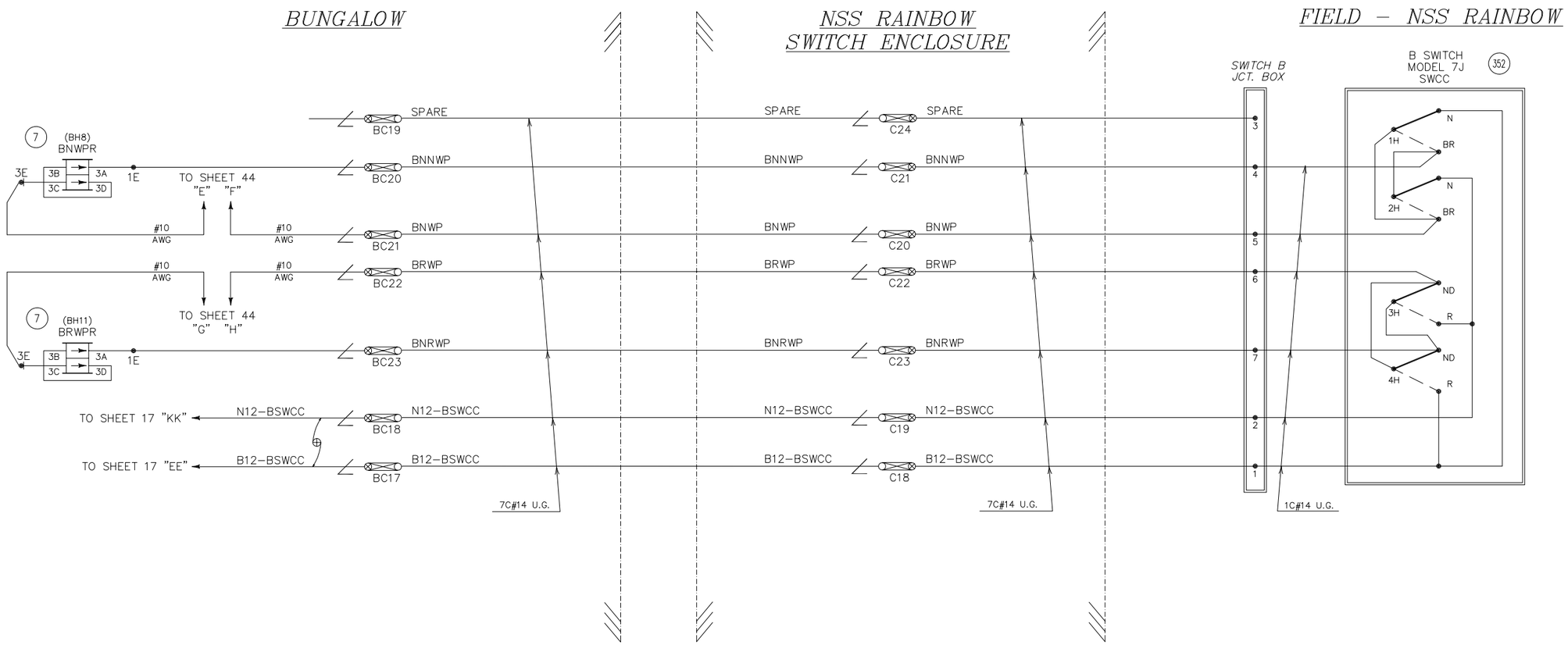

NOTES:

1. ALL WIRING TO BE #16 AWG FLEX UNLESS OTHERWISE NOTED.

2. CONTACT ASSIGNMENT:
   1 & 2 BREAK
   3 & 4 SHUNT

3. CONTACT ADJUSTMENT:
   ADJUST CONTACTS 1 & 2 SO N CONTACTS ARE JUST MADE WITH 3/16" GAUGE IN POINT.
   ADJUST CONTACTS 3 & 4 SO B–R CONTACTS ARE MADE WITH 1/4" GAUGE IN POINT.

4. SWCC LEGEND:
   N – FULL NORMAL TO, BUT NOT INCLUDING, 1/4" FROM NORMAL
   BR – 1/4" FROM NORMAL TO FULL REVERSE
   ND – 1/4" FROM REVERSE TO FULL NORMAL
   R – FULL REVERSE TO, BUT NOT INCLUDING, 1/4" FROM REVERSE

SWCC JUMPER CONFIGURATION

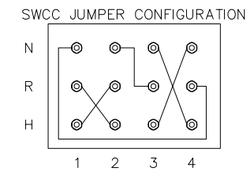

SWITCH CIRCUIT CONTROLLER LOCATED ON NORMALLY CLOSED SIDE OF SWITCH.

REVISIONS

AS IN SERVICE	03–22–17
INSTALL IETMS PTC SYSTEM	
DES: BE/WAW	CHK: BE/ES

The ALASKA RAILROAD CORPORATION
SIGNAL ENGINEERING — P.O. BOX 107500 , ANCHORAGE , ALASKA 99510–7500

RAINBOW
SSS RAINBOW M.P. 93.06 | NSS RAINBOW M.P. 93.28
MANUAL MONITORED SWITCH

DRAWN: *RLB*
DATE: 05–07–12
DWG NO. 009306–009328
SHEET 6 OF 58

009328_06.dwg 08–16–17

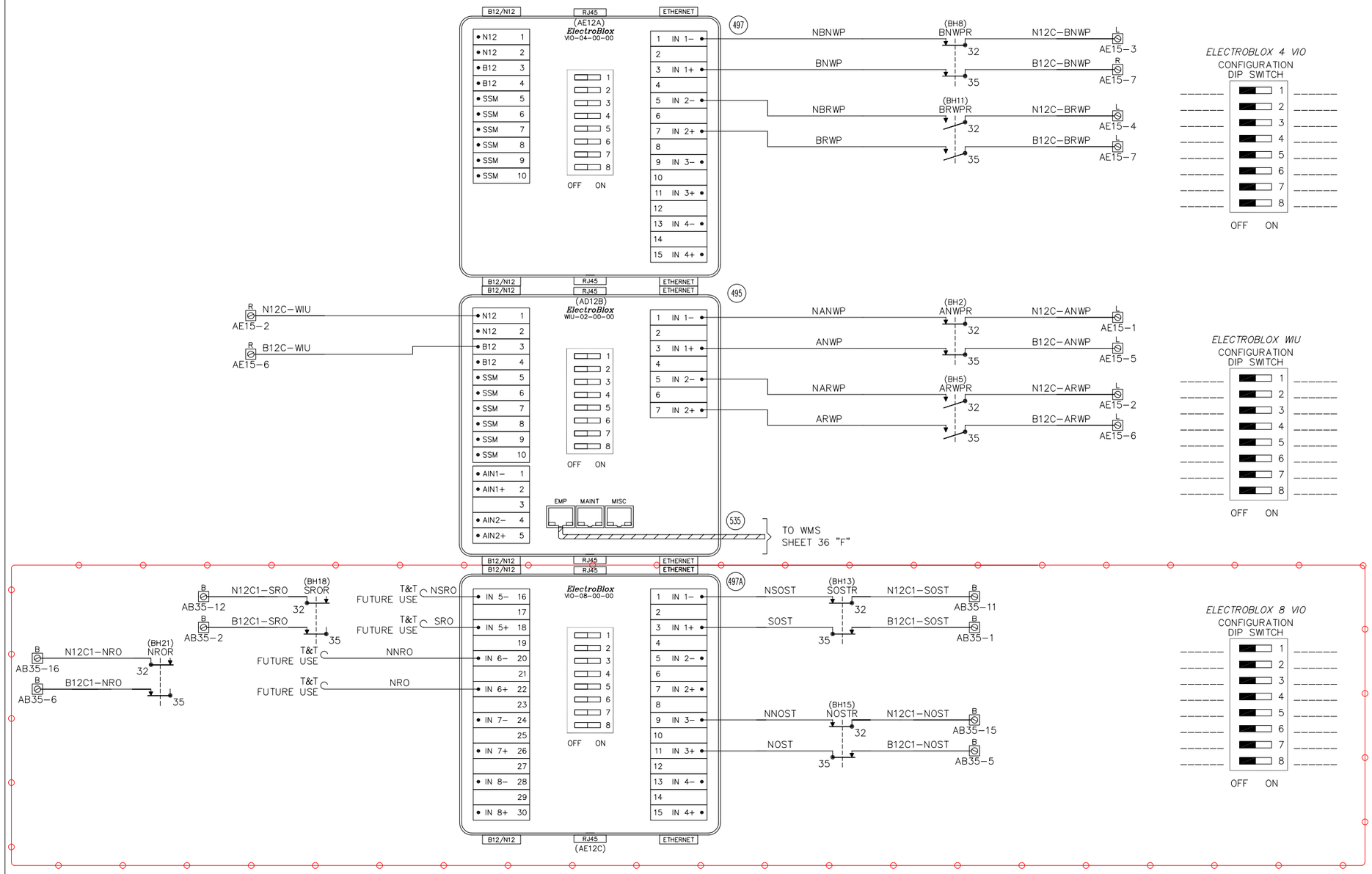

NOTES:

1. ALL WIRING TO BE #16 AWG FLEX UNLESS OTHERWISE NOTED.
2. B12/N12 AND ETHERNET CONNECTION B/W WIU AND WMS ESTABLISHED VIA HARDBUSS CONNECTORS ON TOP AND BOTTOM OF UNITS RESPECTIVELY

The ALASKA RAILROAD CORPORATION

SIGNAL ENGINEERING — P.O. BOX 107500 , ANCHORAGE , ALASKA 99510-7500

RAINBOW

SSS RAINBOW M.P. 93.06 | NSS RAINBOW M.P. 93.28

MANUAL MONITORED SWITCH

REVISIONS

AS DESIGNED-0.00 08-16-17 OS INSTALLATION PTC SYSTEM DES:BE/WAW CHK:BE/ES	AS IN SERVICE 03-22-17 INSTALL IETMS PTC SYSTEM DES:BE/WAW CHK:BE/ES

DRAWN: *RLB*
DATE: 05-07-12

DWG NO. 009306-009328

SHEET 8 OF 58

009328_08.dwg 08-16-17

BURNS ENG. REVISIONS

AS DESIGNED-0.00 PTC OS INSTALLATION

SCALE:	INITIAL	DATE
DESIGNED:	WAW	08-16-17
CHECKED:	ES	08-17-17
BACK-CHECKED:	WAW	08-17-17
CORRECTED:	WAW	08-17-17
VERIFIED:	ES	08-17-17

AS DESIGNED-0.01 PTC OS INSTALLATION

SCALE:	INITIAL	DATE
DESIGNED:	SLF	10-16-17
CHECKED:	WDW	10-16-17
BACK-CHECKED:	SLF	10-16-17
CORRECTED:	SLF	10-16-17
VERIFIED:	WDW	10-16-17

RAINBOW

THE Burns GROUP ENGINEERING AND CONSTRUCTION

SHEET NUMBER REF. 8

DRAWING NUMBER REF. 009306-009328

BURNS PROJECT REF. 2017-159

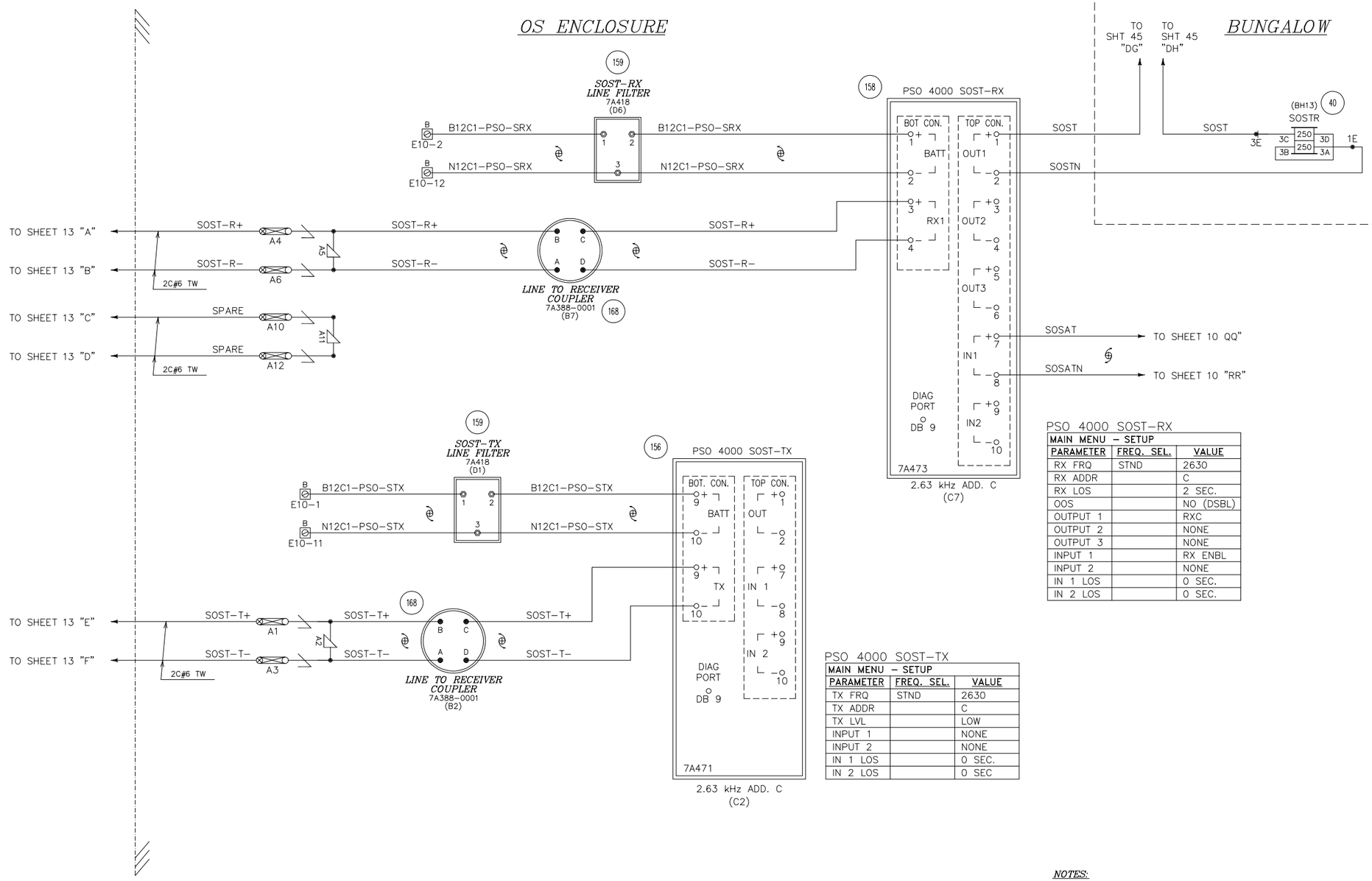

PSO 4000 SOST-RX

MAIN MENU – SETUP		
PARAMETER	FREQ. SEL.	VALUE
RX FRQ	STND	2630
RX ADDR		C
RX LOS		2 SEC.
OOS		NO (DSBL)
OUTPUT 1		RXC
OUTPUT 2		NONE
OUTPUT 3		NONE
INPUT 1		RX ENBL
INPUT 2		NONE
IN 1 LOS		0 SEC.
IN 2 LOS		0 SEC.

PSO 4000 SOST-TX

MAIN MENU – SETUP		
PARAMETER	FREQ. SEL.	VALUE
TX FRQ	STND	2630
TX ADDR		C
TX LVL		LOW
INPUT 1		NONE
INPUT 2		NONE
IN 1 LOS		0 SEC.
IN 2 LOS		0 SEC

NOTES:

1. ALL WIRING TO BE #16 AWG FLEX TEFZEL UNLESS OTHERWISE NOTED.

ALL NEW

REVISIONS

					AS DESIGNED-0.00 08-16-17 OS INSTALLATION PTC SYSTEM DES: BE/WAW CHK: BE/ES

The ALASKA RAILROAD CORPORATION

SIGNAL ENGINEERING P.O. BOX 107500 , ANCHORAGE , ALASKA 99510-7500

RAINBOW

SSS RAINBOW M.P. 93.06 | NSS RAINBOW M.P. 93.28

MANUAL MONITORED SWITCH

DRAWN: *BE*
DATE: 08-16-17
DWG NO. 009306-009328
SHEET 9 OF 58

009328_09.dwg 08-16-17

BURNS ENG. REVISIONS

AS DESIGNED-0.00 / PTC OS INSTALLATION

SCALE:	INITIAL	DATE
DESIGNED:	WAW	08-16-17
CHECKED:	ES	08-17-17
BACK-CHECKED:	WAW	08-17-17
CORRECTED:	WAW	08-17-17
VERIFIED:	ES	08-17-17

AS DESIGNED-0.01 / PTC OS INSTALLATION

SCALE:	INITIAL	DATE
DESIGNED:	SLF	10-16-17
CHECKED:	WDW	10-16-17
BACK-CHECKED:	SLF	10-16-17
CORRECTED:	SLF	10-16-17
VERIFIED:	WDW	10-16-17

RAINBOW

THE Burns GROUP ENGINEERING AND CONSTRUCTION

SHEET NUMBER REF. 9

DRAWING NUMBER REF. 009306-009328

BURNS PROJECT REF. 2017-159

OS ENCLOSURE

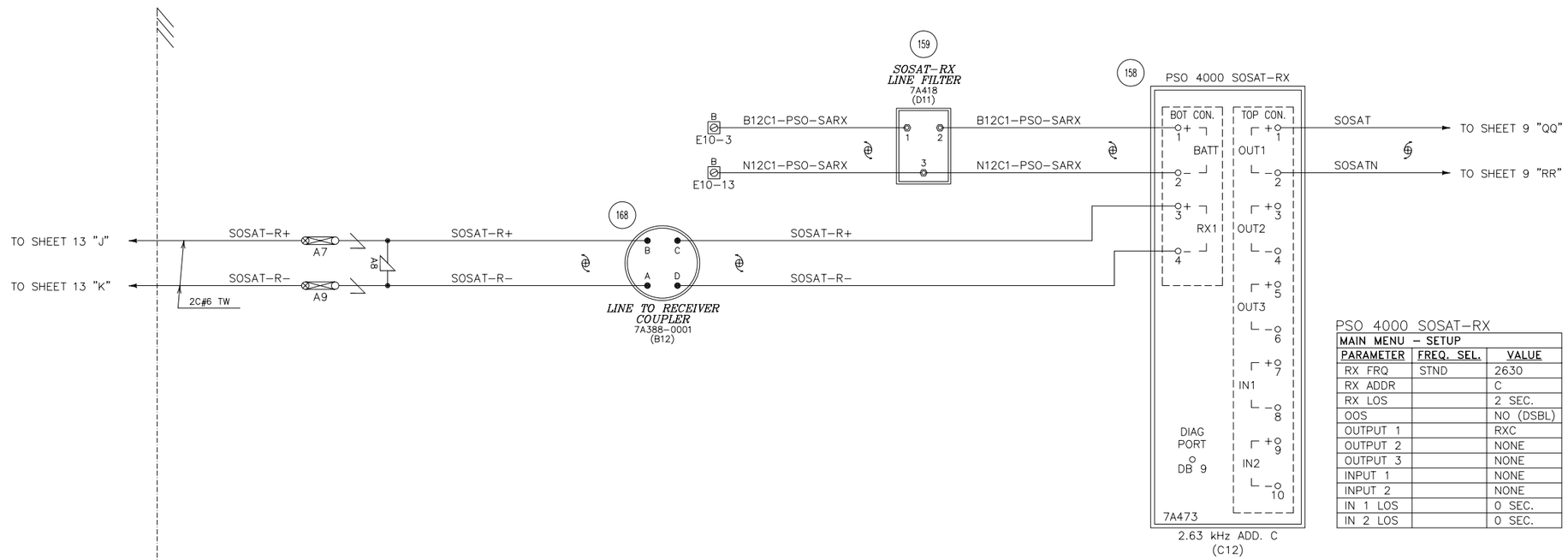

PSO 4000 SOSAT-RX

MAIN MENU – SETUP		
PARAMETER	FREQ. SEL.	VALUE
RX FRQ	STND	2630
RX ADDR		C
RX LOS		2 SEC.
OOS		NO (DSBL)
OUTPUT 1		RXC
OUTPUT 2		NONE
OUTPUT 3		NONE
INPUT 1		NONE
INPUT 2		NONE
IN 1 LOS		0 SEC.
IN 2 LOS		0 SEC.

NOTES:

1. ALL WIRING TO BE #16 AWG FLEX TEFZEL UNLESS OTHERWISE NOTED.

ALL NEW

REVISIONS

					AS DESIGNED-0.00 08-16-17 OS INSTALLATION PTC SYSTEM DES: BE/WAW CHK: BE/ES

The ALASKA RAILROAD CORPORATION

SIGNAL ENGINEERING P.O. BOX 107500 , ANCHORAGE , ALASKA 99510-7500

RAINBOW

SSS RAINBOW M.P. 93.06 | NSS RAINBOW M.P. 93.28

MANUAL MONITORED SWITCH

DRAWN: *BE*
DATE: 08-16-17

DWG NO. 009306-009328

SHEET 10 OF 58

009328_10.dwg 08-16-17

BURNS ENG. REVISIONS

AS DESIGNED-0.00 PTC OS INSTALLATION

SCALE:	INITIAL	DATE
DESIGNED:	WAW	08-16-17
CHECKED:	ES	08-17-17
BACK-CHECKED:	WAW	08-17-17
CORRECTED:	WAW	08-17-17
VERIFIED:	ES	08-17-17

AS DESIGNED-0.01 PTC OS INSTALLATION

SCALE:	INITIAL	DATE
DESIGNED:	SLF	10-16-17
CHECKED:	WDW	10-16-17
BACK-CHECKED:	SLF	10-16-17
CORRECTED:	SLF	10-16-17
VERIFIED:	WDW	10-16-17

RAINBOW

THE Burns GROUP ENGINEERING AND CONSTRUCTION

SHEET NUMBER REF. 10

DRAWING NUMBER REF. 009306-009328

BURNS PROJECT REF. 2017-159

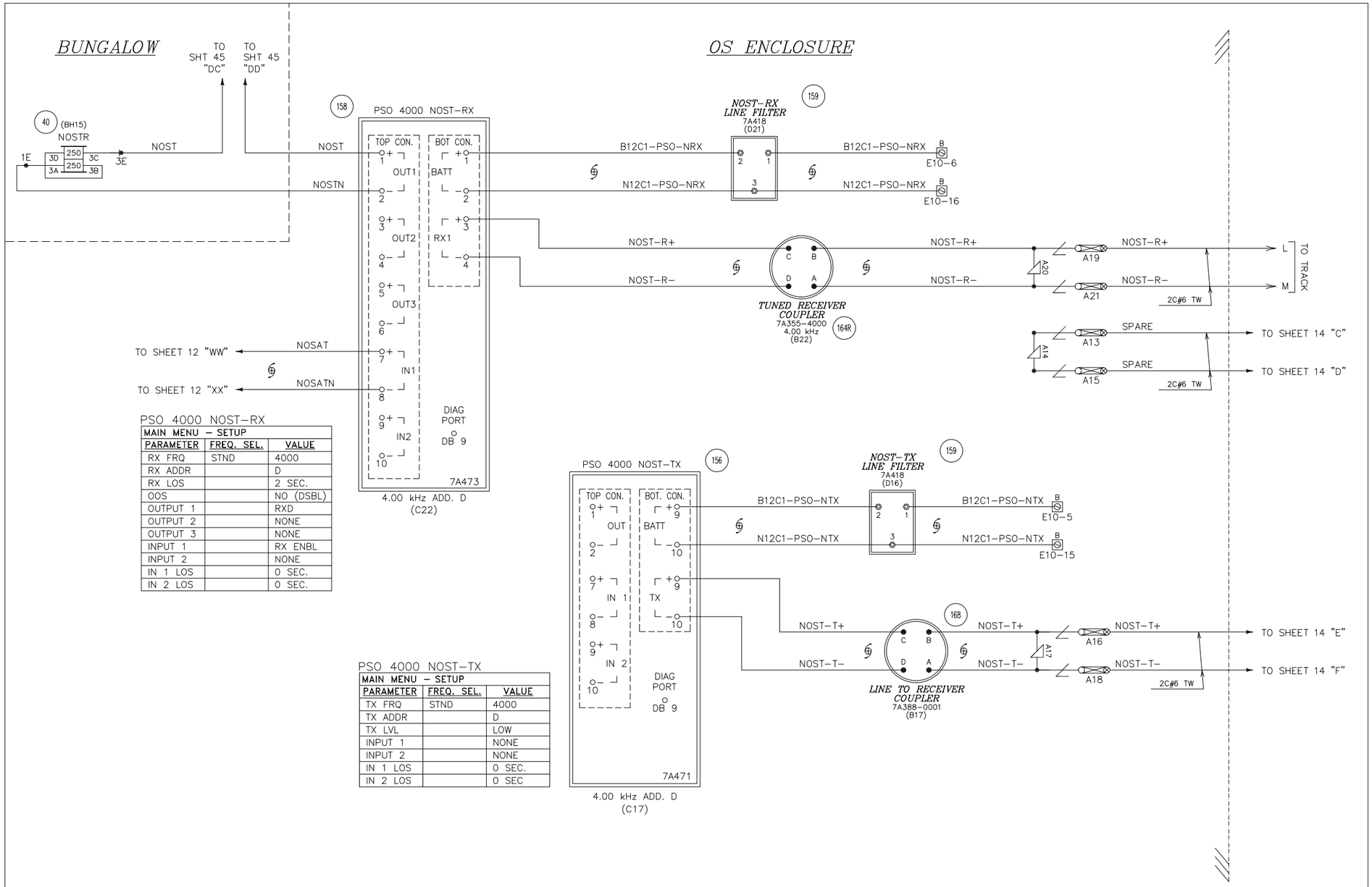

PSO 4000 NOST-RX

MAIN MENU – SETUP		
PARAMETER	FREQ. SEL.	VALUE
RX FRQ	STND	4000
RX ADDR		D
RX LOS		2 SEC.
OOS		NO (DSBL)
OUTPUT 1		RXD
OUTPUT 2		NONE
OUTPUT 3		NONE
INPUT 1		RX ENBL
INPUT 2		NONE
IN 1 LOS		0 SEC.
IN 2 LOS		0 SEC.

PSO 4000 NOST-TX

MAIN MENU – SETUP		
PARAMETER	FREQ. SEL.	VALUE
TX FRQ	STND	4000
TX ADDR		D
TX LVL		LOW
INPUT 1		NONE
INPUT 2		NONE
IN 1 LOS		0 SEC.
IN 2 LOS		0 SEC

NOTES:

1. ALL WIRING TO BE #16 AWG FLEX TEFZEL UNLESS OTHERWISE NOTED.
2. ALL PSO TUNED COUPLERS IN BUNGALOW SHOULD BE LOCATED WITHIN 300 FT. OF TRACK CONNECTIONS.

ALL NEW

REVISIONS

AS DESIGNED-0.00 08-16-17
OS INSTALLATION
PTC SYSTEM
DES: BE/WAW CHK: BE/ES

The ALASKA RAILROAD CORPORATION
SIGNAL ENGINEERING P.O. BOX 107500 , ANCHORAGE , ALASKA 99510-7500

RAINBOW
SSS RAINBOW M.P. 93.06 | NSS RAINBOW M.P. 93.28
MANUAL MONITORED SWITCH

DRAWN: BE
DATE: 08-16-17
DWG NO. 009306-009328
SHEET 11 OF 58

009328_11.dwg 08-16-17

BURNS ENG. REVISIONS

AS DESIGNED-0.00 / PTC OS INSTALLATION

SCALE:	INITIAL	DATE
DESIGNED:	WAW	08-16-17
CHECKED:	ES	08-17-17
BACK-CHECKED:	WAW	08-17-17
CORRECTED:	WAW	08-17-17
VERIFIED:	ES	08-17-17

AS DESIGNED-0.01 / PTC OS INSTALLATION

SCALE:	INITIAL	DATE
DESIGNED:	SLF	10-16-17
CHECKED:	WDW	10-16-17
BACK-CHECKED:	SLF	10-16-17
CORRECTED:	SLF	10-16-17
VERIFIED:	WDW	10-16-17

RAINBOW

THE Burns GROUP ENGINEERING AND CONSTRUCTION

SHEET NUMBER REF. 11
DRAWING NUMBER REF. 009306-009328
BURNS PROJECT REF. 2017-159

OS ENCLOSURE

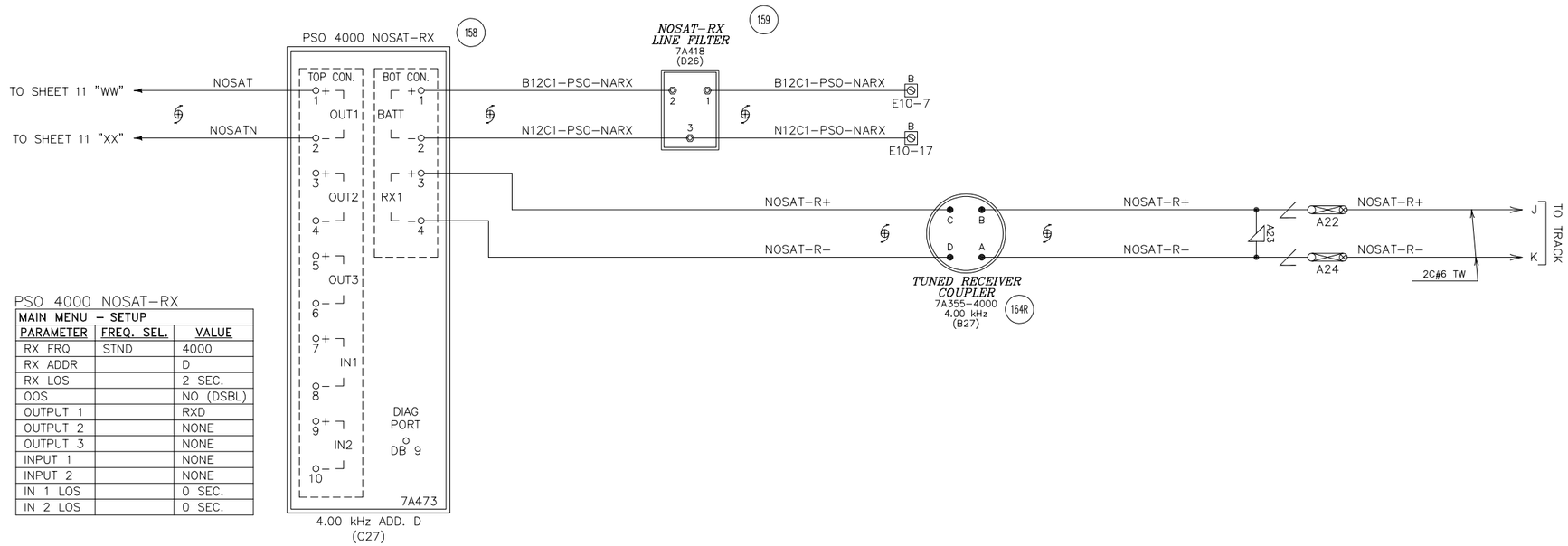

PSO 4000 NOSAT–RX

MAIN MENU – SETUP		
PARAMETER	FREQ. SEL.	VALUE
RX FRQ	STND	4000
RX ADDR		D
RX LOS		2 SEC.
OOS		NO (DSBL)
OUTPUT 1		RXD
OUTPUT 2		NONE
OUTPUT 3		NONE
INPUT 1		NONE
INPUT 2		NONE
IN 1 LOS		0 SEC.
IN 2 LOS		0 SEC.

NOTES:

1. ALL WIRING TO BE #16 AWG FLEX TEFZEL UNLESS OTHERWISE NOTED.
2. ALL PSO TUNED COUPLERS IN BUNGALOW SHOULD BE LOCATED WITHIN 300 FT. OF TRACK CONNECTIONS.

ALL NEW

REVISIONS

AS DESIGNED–0.00 08–16–17
OS INSTALLATION
PTC SYSTEM
DES: BE/WAW CHK: BE/ES

The ALASKA RAILROAD CORPORATION
SIGNAL ENGINEERING P.O. BOX 107500 , ANCHORAGE , ALASKA 99510–7500

RAINBOW
SSS RAINBOW M.P. 93.06 | NSS RAINBOW M.P. 93.28
MANUAL MONITORED SWITCH

DRAWN: *BE*
DATE: 08–16–17
DWG NO. 009306–009328
SHEET 12 OF 58

009328_12.dwg 08–16–17

BURNS ENG.
REVISIONS

AS DESIGNED–0.00 PTC OS INSTALLATION

SCALE:		
	INITIAL	DATE
DESIGNED:	WAW	08–16–17
CHECKED:	ES	08–17–17
BACK–CHECKED:	WAW	08–17–17
CORRECTED:	WAW	08–17–17
VERIFIED:	ES	08–17–17

AS DESIGNED–0.01 PTC OS INSTALLATION

SCALE:		
	INITIAL	DATE
DESIGNED:	SLF	10–16–17
CHECKED:	WDW	10–16–17
BACK–CHECKED:	SLF	10–16–17
CORRECTED:	SLF	10–16–17
VERIFIED:	WDW	10–16–17

RAINBOW

THE Burns GROUP
ENGINEERING AND CONSTRUCTION

SHEET NUMBER REF. 12
DRAWING NUMBER REF. 009306–009328
BURNS PROJECT REF. 2017–159

SSS CLEARANCE ENCLOSRE

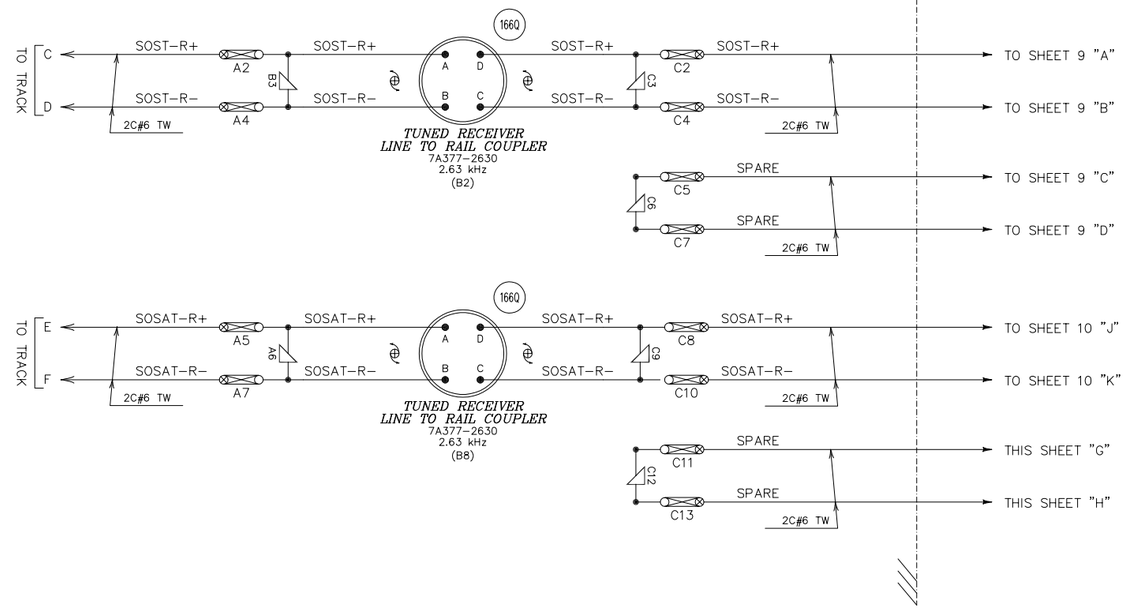

SSS SWITCH POINT ENCLOSURE

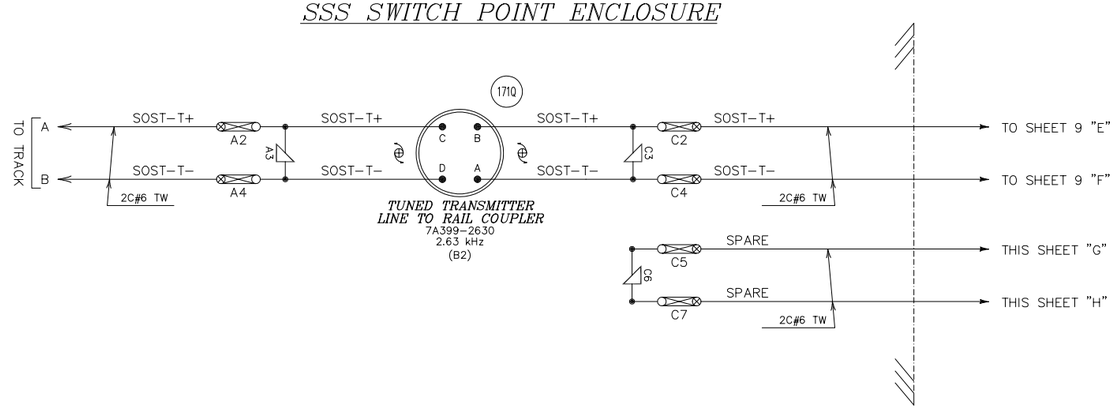

NOTES:

1. ALL WIRING TO BE #16 AWG FLEX TEFZEL UNLESS OTHERWISE NOTED.
2. ALL PSO LINE COUPLERS IN OUTLYING CASES SHOULD BE LOCATED WITHIN 100 FT. OF TRACK CONNECTIONS.

ALL NEW

REVISIONS

AS DESIGNED-0.00 08-16-17
OS INSTALLATION
PTC SYSTEM
DES: BE/WAW CHK: BE/ES

The ALASKA RAILROAD CORPORATION
SIGNAL ENGINEERING P.O. BOX 107500 , ANCHORAGE , ALASKA 99510-7500

RAINBOW
SSS RAINBOW M.P. 93.06 | NSS RAINBOW M.P. 93.28
MANUAL MONITORED SWITCH

DRAWN: RLB
DATE: 05-07-12
DWG NO. 009306-009328
SHEET 13 OF 58

009328_13.dwg 08-16-17

BURNS ENG. REVISIONS

AS DESIGNED-0.00 PTC OS INSTALLATION	SCALE:		
		INITIAL	DATE
	DESIGNED:	WAW	08-16-17
	CHECKED:	ES	08-17-17
	BACK-CHECKED:	WAW	08-17-17
	CORRECTED:	WAW	08-17-17
	VERIFIED:	ES	08-17-17

AS DESIGNED-0.01 PTC OS INSTALLATION	SCALE:		
		INITIAL	DATE
	DESIGNED:	SLF	10-16-17
	CHECKED:	WDW	10-16-17
	BACK-CHECKED:	SLF	10-16-17
	CORRECTED:	SLF	10-16-17
	VERIFIED:	WDW	10-16-17

RAINBOW

THE Burns GROUP ENGINEERING AND CONSTRUCTION

SHEET NUMBER REF. 13
DRAWING NUMBER REF. 009306-009328
BURNS PROJECT REF. 2017-159

NSS SWITCH POINT ENCLOSURE

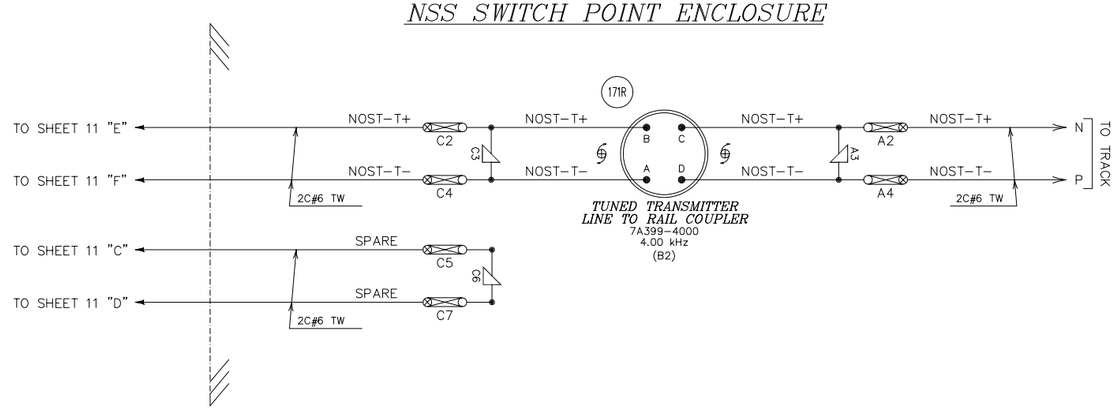

NOTES:

1. ALL WIRING TO BE #16 AWG FLEX TEFZEL UNLESS OTHERWISE NOTED.
2. ALL PSO LINE COUPLERS IN OUTLYING CASES SHOULD BE LOCATED WITHIN 100 FT. OF TRACK CONNECTIONS.

ALL NEW

REVISIONS

					AS DESIGNED-0.00 08-16-17 OS INSTALLATION PTC SYSTEM DES:BE/WAW CHK:BE/ES

The ALASKA RAILROAD CORPORATION
SIGNAL ENGINEERING P.O. BOX 107500 , ANCHORAGE , ALASKA 99510-7500

RAINBOW
SSS RAINBOW M.P. 93.06 | NSS RAINBOW M.P. 93.28
MANUAL MONITORED SWITCH

DRAWN: *RLB*
DATE: 05-07-12
DWG NO. 009306-009328
SHEET 14 OF 58

009328_14.dwg 08-16-17

BURNS ENG. REVISIONS

AS DESIGNED-0.00 / PTC OS INSTALLATION

SCALE:	INITIAL	DATE
DESIGNED:	WAW	08-16-17
CHECKED:	ES	08-17-17
BACK-CHECKED:	WAW	08-17-17
CORRECTED:	WAW	08-17-17
VERIFIED:	ES	08-17-17

AS DESIGNED-0.01 / PTC OS INSTALLATION

SCALE:	INITIAL	DATE
DESIGNED:	SLF	10-16-17
CHECKED:	WDW	10-16-17
BACK-CHECKED:	SLF	10-16-17
CORRECTED:	SLF	10-16-17
VERIFIED:	WDW	10-16-17

RAINBOW

THE Burns GROUP ENGINEERING AND CONSTRUCTION

SHEET NUMBER REF. 14
DRAWING NUMBER REF. 009306-009328
BURNS PROJECT REF. 2017-159

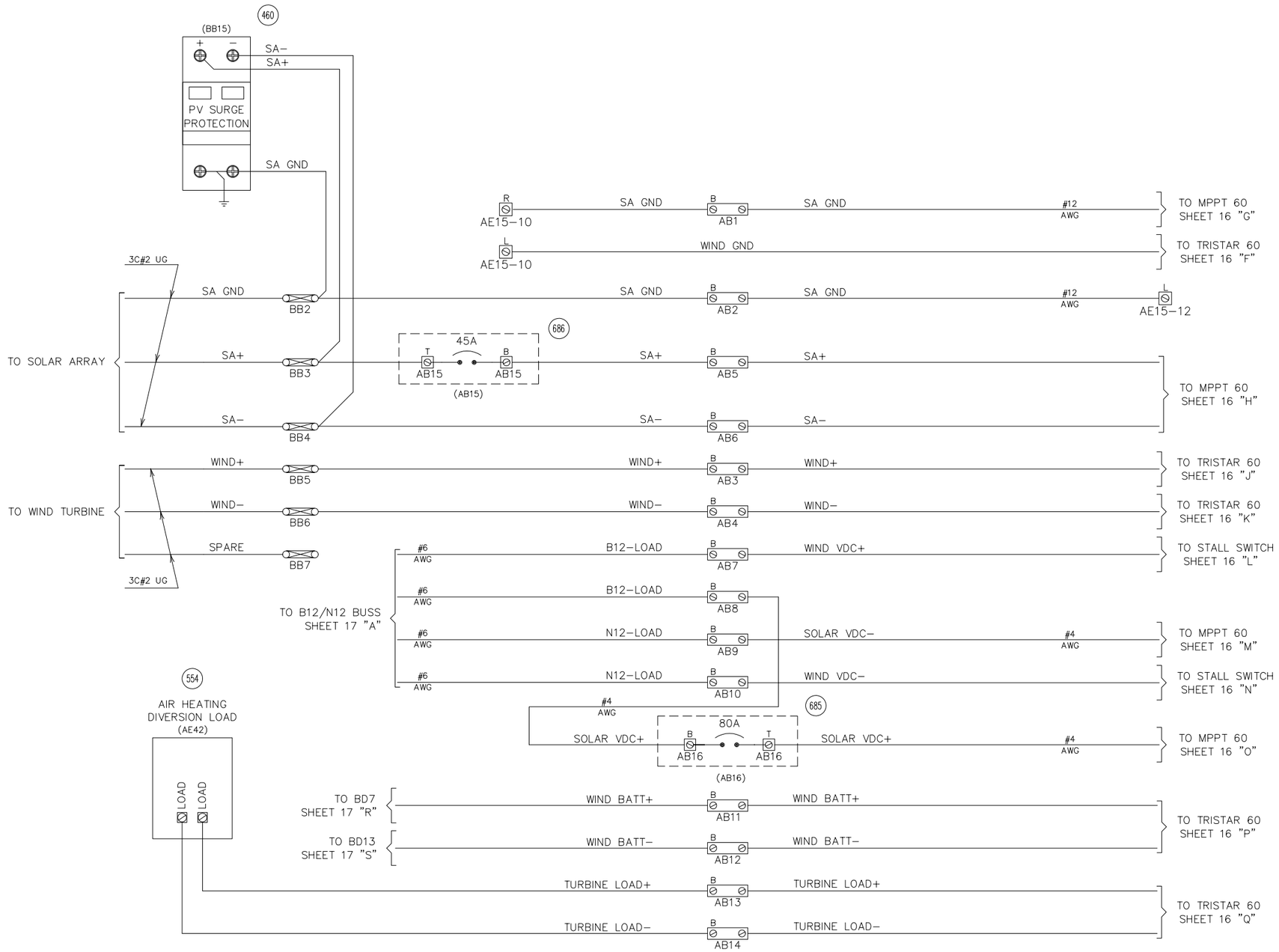

NOTES:

1. ALL WIRING TO BE #6 AWG FLEX UNLESS OTHERWISE NOTED.

REVISIONS

					AS IN SERVICE 03−22−17 INSTALL IETMS PTC SYSTEM DES:BE/WAW CHK:BE/ES

The ALASKA RAILROAD CORPORATION

SIGNAL ENGINEERING P.O. BOX 107500 , ANCHORAGE , ALASKA 99510−7500

RAINBOW

SSS RAINBOW M.P. 93.06 | NSS RAINBOW M.P. 93.28

MANUAL MONITORED SWITCH

DRAWN: *RLB*
DATE: 05−07−12

DWG NO. 009306−009328

SHEET 15 OF 58

009328_15.dwg 08−16−17

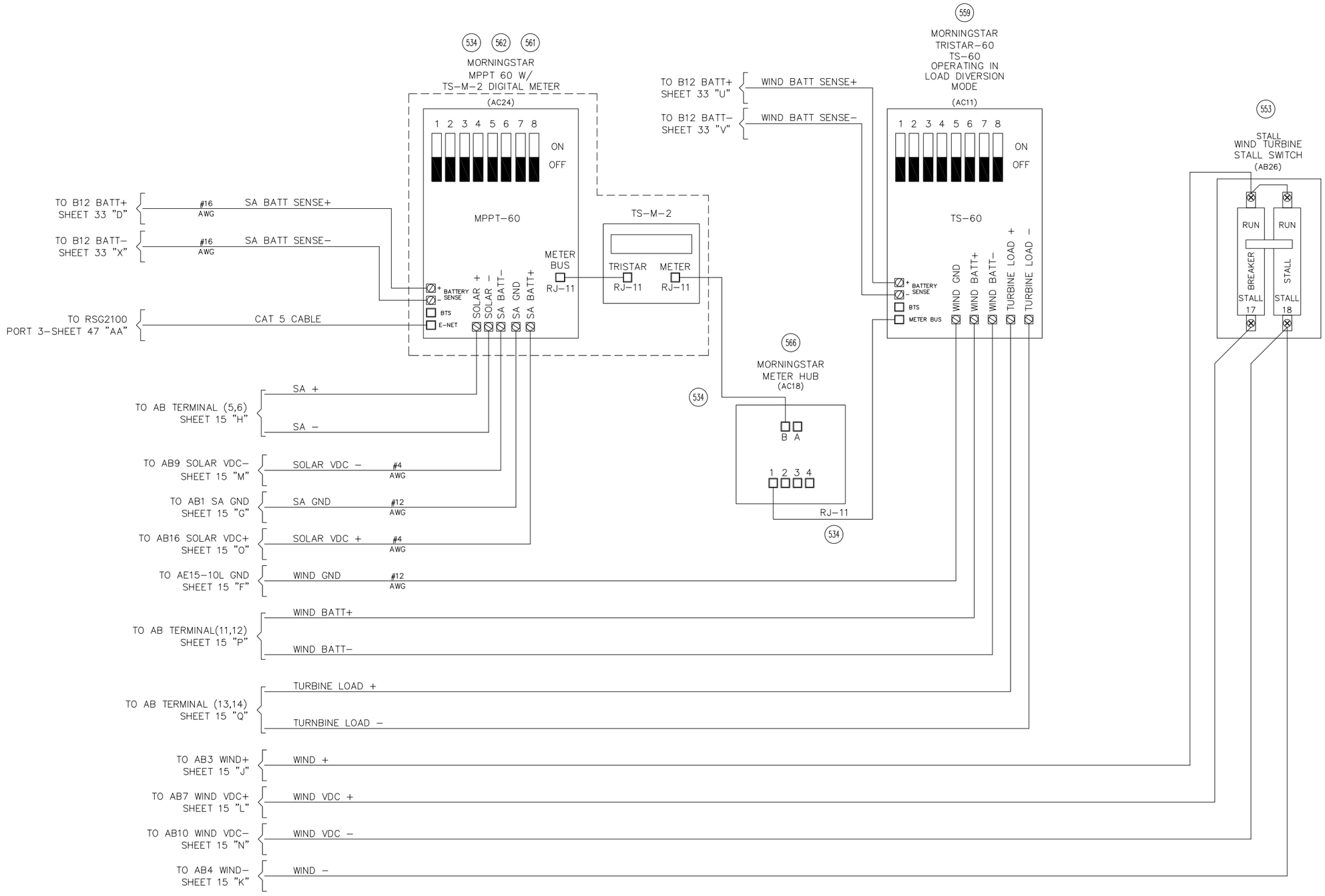

NOTES:

1. ALL WIRING TO BE #6 AWG FLEX UNLESS OTHERWISE NOTED.

REVISIONS

					AS IN SERVICE 03-22-17 INSTALL IETMS PTC SYSTEM DES:BE/WAW CHK:BE/ES

The ALASKA RAILROAD CORPORATION

SIGNAL ENGINEERING P.O. BOX 107500 , ANCHORAGE , ALASKA 99510-7500

RAINBOW

SSS RAINBOW M.P. 93.06 | NSS RAINBOW M.P. 93.28

MANUAL MONITORED SWITCH

DRAWN: *RLB*
DATE: 05-07-12

DWG NO. 009306-009328

SHEET 16 OF 58

009328_16.dwg 08-16-17

BUNGALOW

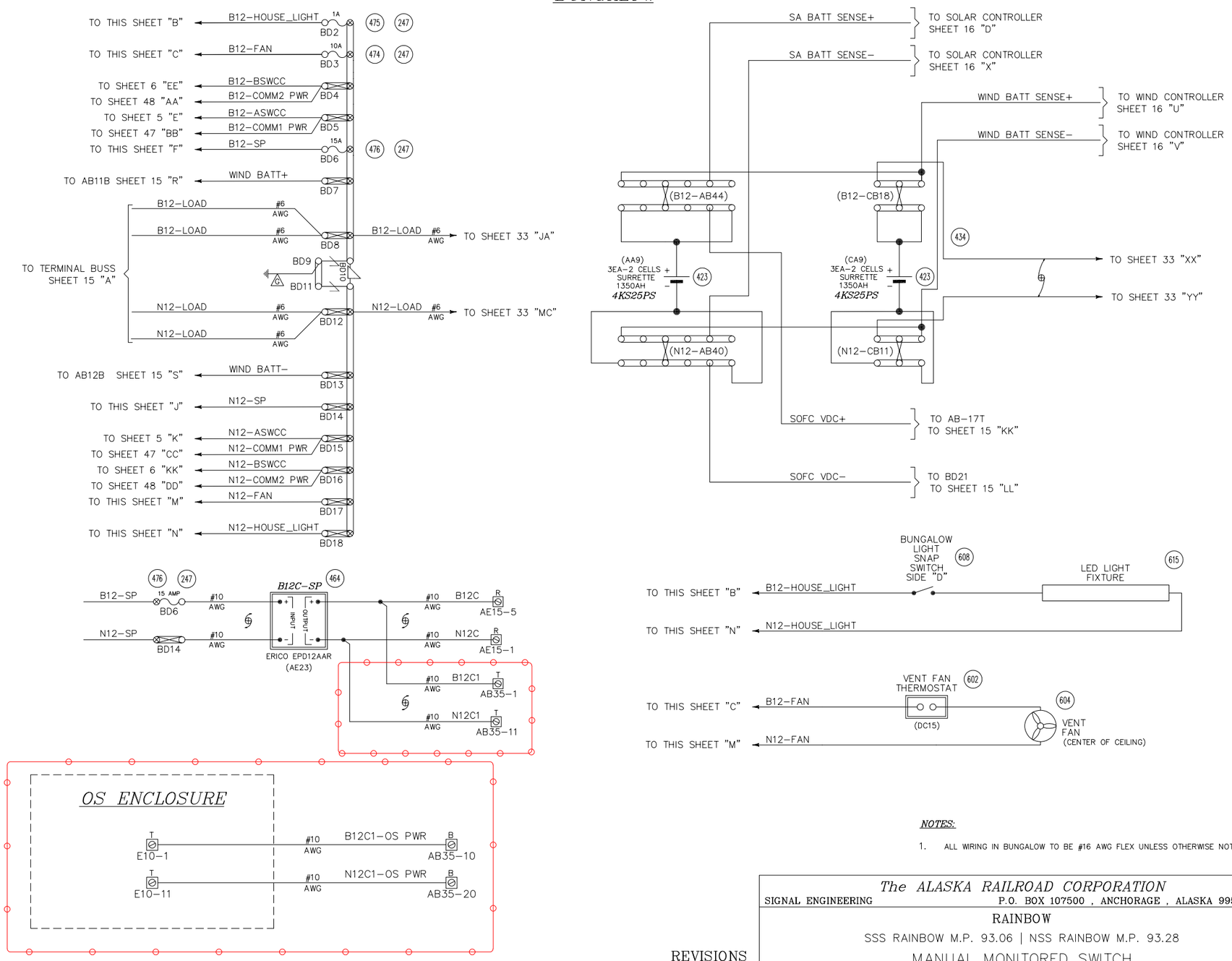

NOTES:

1. ALL WIRING IN BUNGALOW TO BE #16 AWG FLEX UNLESS OTHERWISE NOTED.

REVISIONS

				AS DESIGNED-0.00 08-16-17 OS INSTALLATION PTC SYSTEM DES:BE/WAW CHK:BE/ES	AS IN SERVICE 03-22-17 INSTALL IETMS PTC SYSTEM DES:BE/WAW CHK:BE/ES

The ALASKA RAILROAD CORPORATION

SIGNAL ENGINEERING P.O. BOX 107500 , ANCHORAGE , ALASKA 99510-7500

RAINBOW

SSS RAINBOW M.P. 93.06 | NSS RAINBOW M.P. 93.28

MANUAL MONITORED SWITCH

DRAWN: *RLB*
DATE: 05-07-12

DWG NO. 009306-009328

SHEET 17 OF 58

009328_17.dwg 08-16-17

BURNS ENG. REVISIONS

AS DESIGNED-0.00 PTC OS INSTALLATION	SCALE:		
		INITIAL	DATE
	DESIGNED:	WAW	08-16-17
	CHECKED:	ES	08-17-17
	BACK-CHECKED:	WAW	08-17-17
	CORRECTED:	WAW	08-17-17
	VERIFIED:	ES	08-17-17

AS DESIGNED-0.01 PTC OS INSTALLATION	SCALE:		
		INITIAL	DATE
	DESIGNED:	SLF	10-16-17
	CHECKED:	WDW	10-16-17
	BACK-CHECKED:	SLF	10-16-17
	CORRECTED:	SLF	10-16-17
	VERIFIED:	WDW	10-16-17

RAINBOW

THE Burns GROUP ENGINEERING AND CONSTRUCTION

SHEET NUMBER REF. 17

DRAWING NUMBER REF. 009306-009328

BURNS PROJECT REF. 2017-159

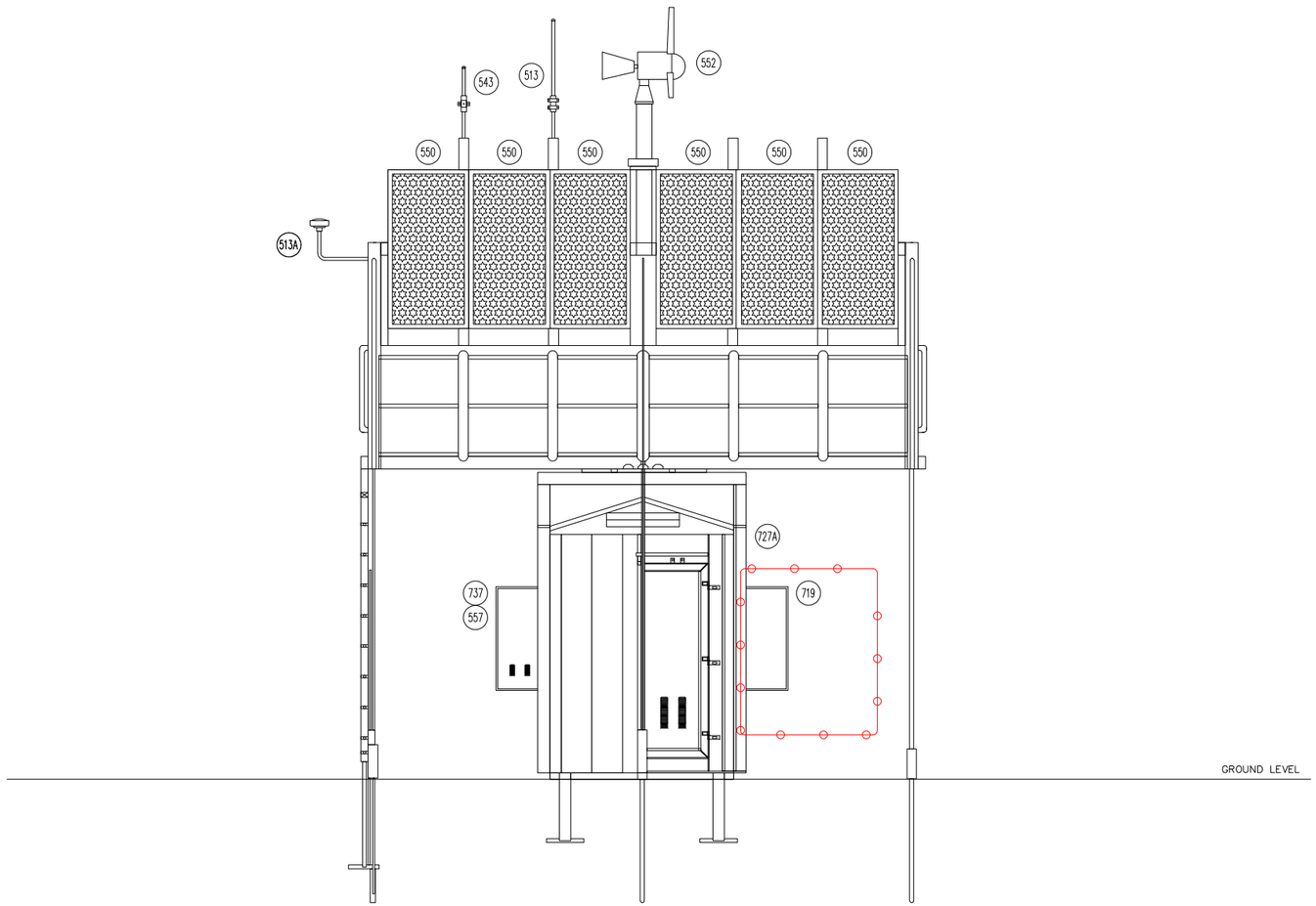

SOLAR/WIND BUNGALOW
NOT TO SCALE

The ALASKA RAILROAD CORPORATION
SIGNAL ENGINEERING P.O. BOX 107500 , ANCHORAGE , ALASKA 99510-7500

RAINBOW

SSS RAINBOW M.P. 93.06 | NSS RAINBOW M.P. 93.28

MANUAL MONITORED SWITCH

REVISIONS

AS DESIGNED-0.00 08-16-17 OS INSTALLATION PTC SYSTEM DES:BE/WAW CHK:BE/ES	AS IN SERVICE 03-22-17 INSTALL IETMS PTC SYSTEM DES:BE/WAW CHK:BE/ES	DRAWN: *RLB* DATE: 05-07-12	DWG NO. 009306-009328	SHEET 18 OF 58

009328_18.dwg 08-16-17

BURNS ENG. REVISIONS

AS DESIGNED-0.00 PTC OS INSTALLATION

SCALE:	INITIAL	DATE
DESIGNED:	WAW	08-16-17
CHECKED:	ES	08-17-17
BACK-CHECKED:	WAW	08-17-17
CORRECTED:	WAW	08-17-17
VERIFIED:	ES	08-17-17

AS DESIGNED-0.01 PTC OS INSTALLATION

SCALE:	INITIAL	DATE
DESIGNED:	SLF	10-16-17
CHECKED:	WDW	10-16-17
BACK-CHECKED:	SLF	10-16-17
CORRECTED:	SLF	10-16-17
VERIFIED:	WDW	10-16-17

RAINBOW

THE Burns GROUP ENGINEERING AND CONSTRUCTION

SHEET NUMBER REF. 18

DRAWING NUMBER REF. 009306-009328

BURNS PROJECT REF. 2017-159

TERMINAL DETAILS

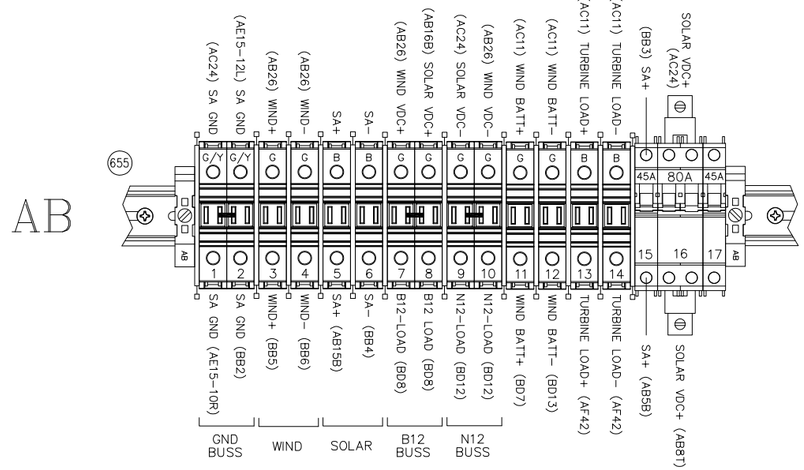

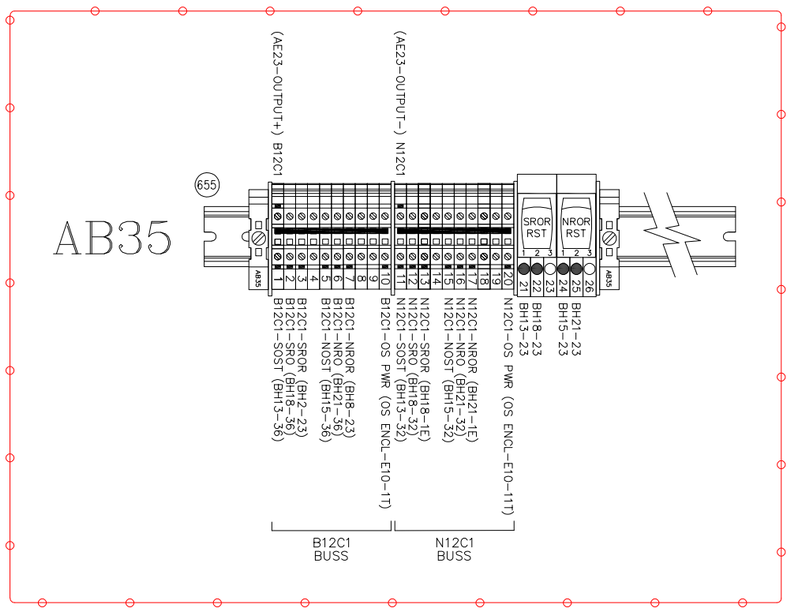

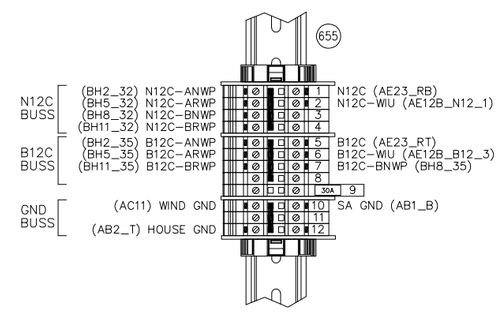

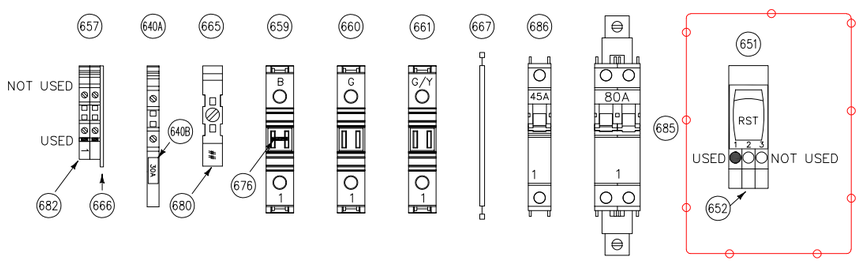

NOTES:

1. USE 20 POLE JUMPER (MAT REF 669) FOR TERMINAL 657.
2. USE 10 POLE JUMPER (MAT REF 668) FOR TERMINAL 657.

REVISIONS

AS DESIGNED−0.00 08−16−17 OS INSTALLATION PTC SYSTEM DES:BE/WAW CHK:BE/ES	AS IN SERVICE 03−22−17 INSTALL IETMS PTC SYSTEM DES:BE/WAW CHK:BE/ES

The ALASKA RAILROAD CORPORATION

SIGNAL ENGINEERING P.O. BOX 107500 , ANCHORAGE , ALASKA 99510−7500

RAINBOW

SSS RAINBOW M.P. 93.06 | NSS RAINBOW M.P. 93.28

MANUAL MONITORED SWITCH

DRAWN: RLB
DATE: 05−07−12

DWG NO. 009306−009328

SHEET 19 OF 58

009328_19.dwg 08−16−17

BURNS ENG. REVISIONS

AS DESIGNED−0.00 PTC OS INSTALLATION	SCALE:	INITIAL	DATE
	DESIGNED:	WAW	08−16−17
	CHECKED:	ES	08−17−17
	BACK−CHECKED:	WAW	08−17−17
	CORRECTED:	WAW	08−17−17
	VERIFIED:	ES	08−17−17

AS DESIGNED−0.01 PTC OS INSTALLATION	SCALE:	INITIAL	DATE
	DESIGNED:	SLF	10−16−17
	CHECKED:	WDW	10−16−17
	BACK−CHECKED:	SLF	10−16−17
	CORRECTED:	SLF	10−16−17
	VERIFIED:	WDW	10−16−17

RAINBOW

THE Burns GROUP ENGINEERING AND CONSTRUCTION

SHEET NUMBER REF. 19

DRAWING NUMBER REF. 009306−009328

BURNS PROJECT REF. 2017−159

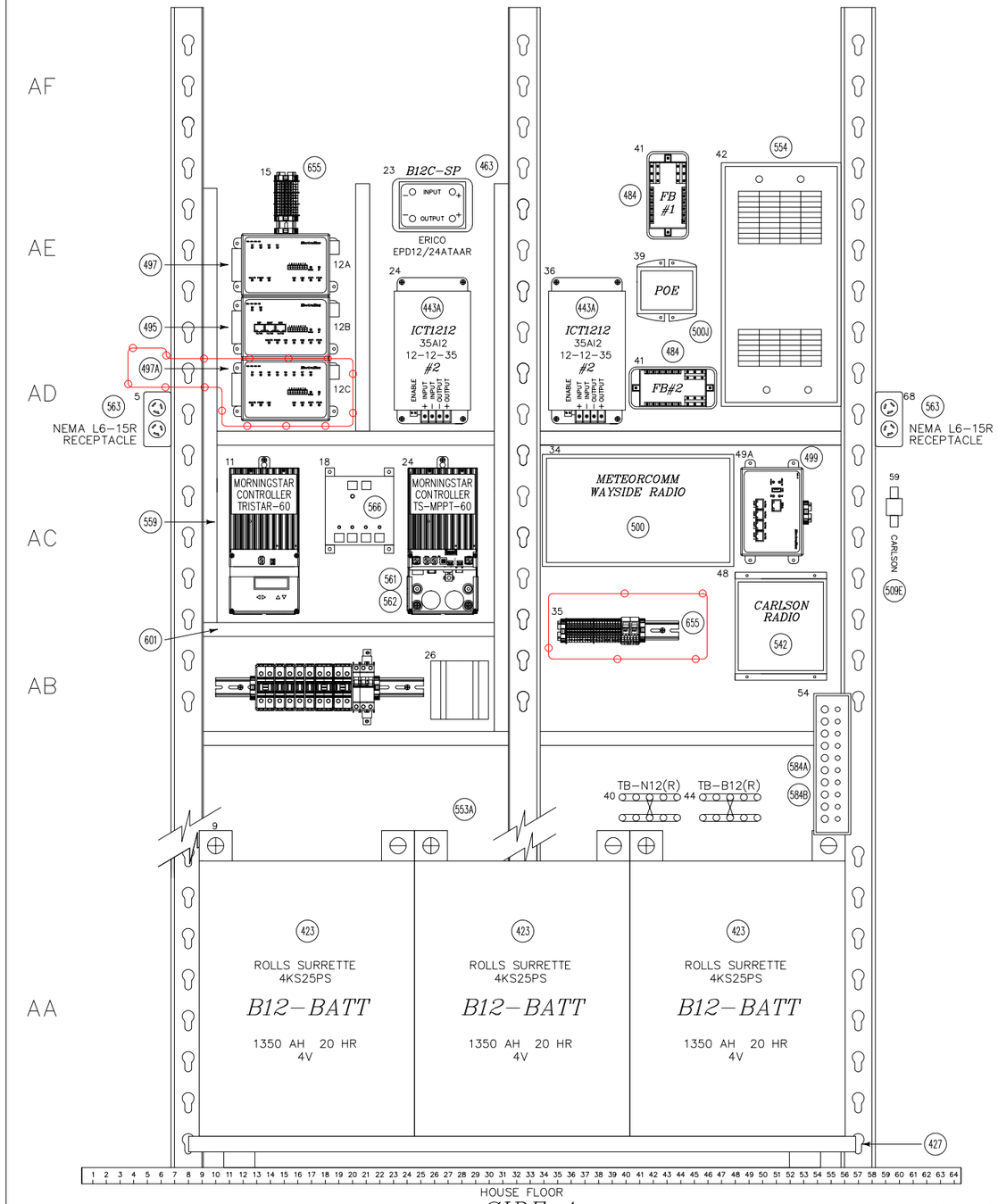

SIDE A

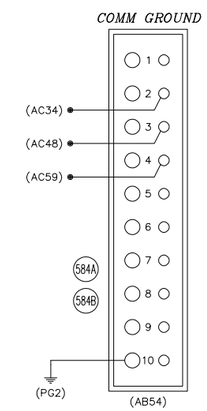

REVISIONS

AS DESIGNED-0.00 08-16-17 OS INSTALLATION PTC SYSTEM DES:BE/WAW CHK:BE/ES	AS IN SERVICE 03-22-17 INSTALL IETMS PTC SYSTEM DES:BE/WAW CHK:BE/ES

The ALASKA RAILROAD CORPORATION

SIGNAL ENGINEERING P.O. BOX 107500 , ANCHORAGE , ALASKA 99510-7500

RAINBOW

SSS RAINBOW M.P. 93.06 | NSS RAINBOW M.P. 93.28

MANUAL MONITORED SWITCH

DRAWN: *RLB*
DATE: 05-07-12

DWG NO. 009306-009328

SHEET 20 OF 58

009328_20.dwg 08-16-17

BURNS ENG. REVISIONS

AS DESIGNED-0.00
PTC OS INSTALLATION

SCALE:	INITIAL	DATE
DESIGNED:	WAW	08-16-17
CHECKED:	ES	08-17-17
BACK-CHECKED:	WAW	08-17-17
CORRECTED:	WAW	08-17-17
VERIFIED:	ES	08-17-17

AS DESIGNED-0.01
PTC OS INSTALLATION

SCALE:	INITIAL	DATE
DESIGNED:	SLF	10-16-17
CHECKED:	WDW	10-16-17
BACK-CHECKED:	SLF	10-16-17
CORRECTED:	SLF	10-16-17
VERIFIED:	WDW	10-16-17

RAINBOW

THE Burns GROUP
ENGINEERING AND CONSTRUCTION

SHEET NUMBER REF. 20

DRAWING NUMBER REF. 009306-009328

BURNS PROJECT REF. 2017-159

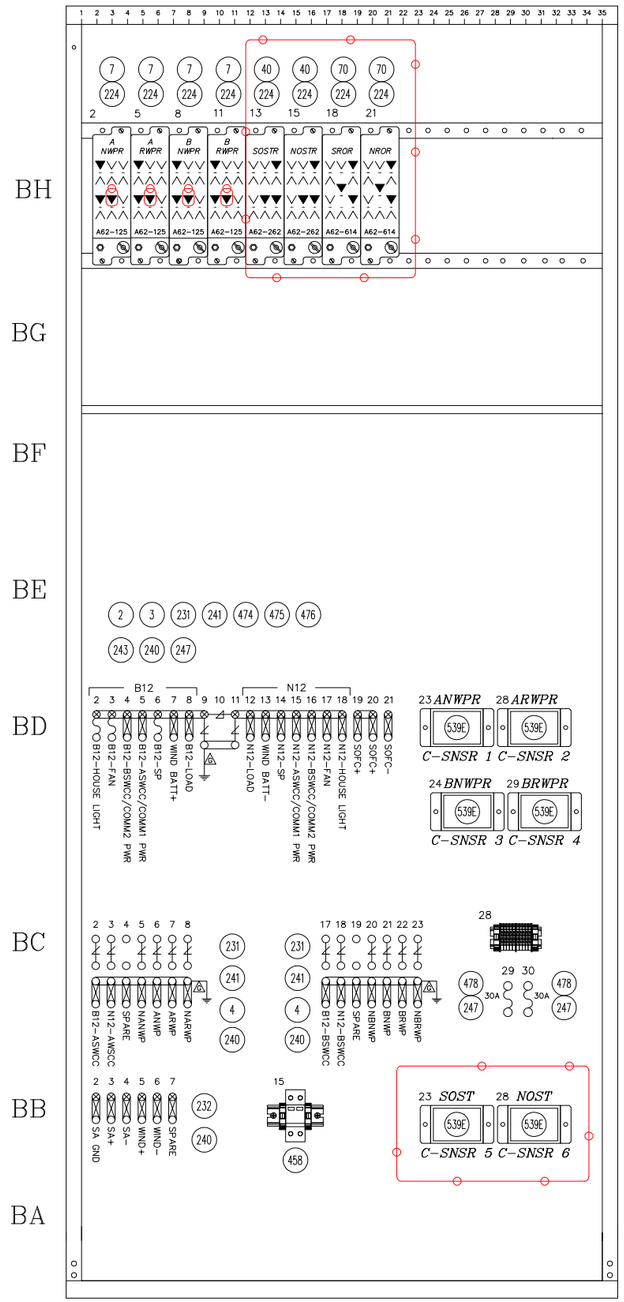

HOUSE FLOOR
TERMINAL BOARD (FRONT)
SIDE B

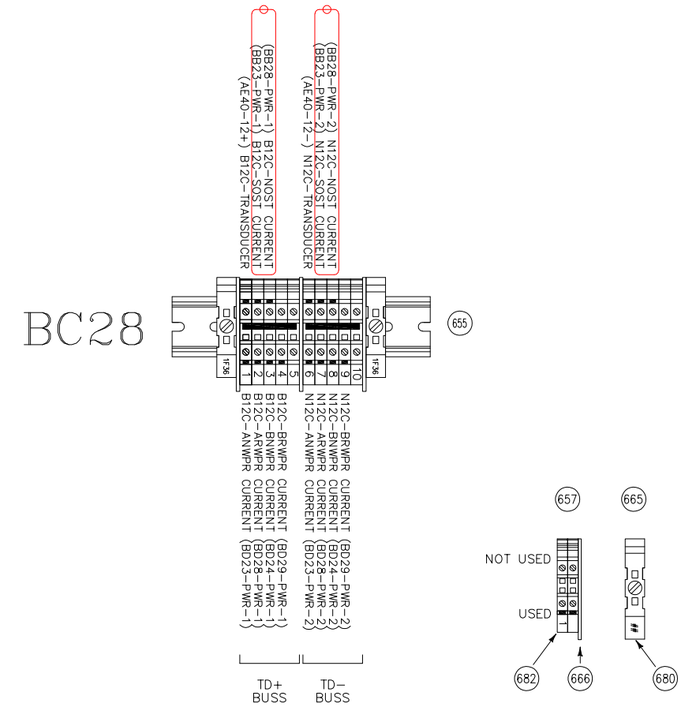

NOTES:

1. USE 5 POLE JUMPER MAT REF 678 FOR TERMINAL 657 (1-5 & 6-10)

REVISIONS

AS DESIGNED-0.00 08-16-17 OS INSTALLATION PTC SYSTEM DES:BE/WAW CHK:BE/ES	AS IN SERVICE 03-22-17 INSTALL IETMS PTC SYSTEM DES:BE/WAW CHK:BE/ES

The ALASKA RAILROAD CORPORATION
SIGNAL ENGINEERING P.O. BOX 107500 , ANCHORAGE , ALASKA 99510-7500

RAINBOW
SSS RAINBOW M.P. 93.06 | NSS RAINBOW M.P. 93.28
MANUAL MONITORED SWITCH

DRAWN: *RLB*
DATE: 05-07-12
DWG NO. 009306-009328
SHEET 21 OF 58

009328_21.dwg 08-16-17

BURNS ENG.
REVISIONS

AS DESIGNED-0.00 / PTC OS INSTALLATION

SCALE:	INITIAL	DATE
DESIGNED:	WAW	08-16-17
CHECKED:	ES	08-17-17
BACK-CHECKED:	WAW	08-17-17
CORRECTED:	WAW	08-17-17
VERIFIED:	ES	08-17-17

AS DESIGNED-0.01 / PTC OS INSTALLATION

SCALE:	INITIAL	DATE
DESIGNED:	SLF	10-16-17
CHECKED:	WDW	10-16-17
BACK-CHECKED:	SLF	10-16-17
CORRECTED:	SLF	10-16-17
VERIFIED:	WDW	10-16-17

RAINBOW

THE Burns GROUP ENGINEERING AND CONSTRUCTION

SHEET NUMBER REF. 21
DRAWING NUMBER REF. 009306-009328
BURNS PROJECT REF. 2017-159

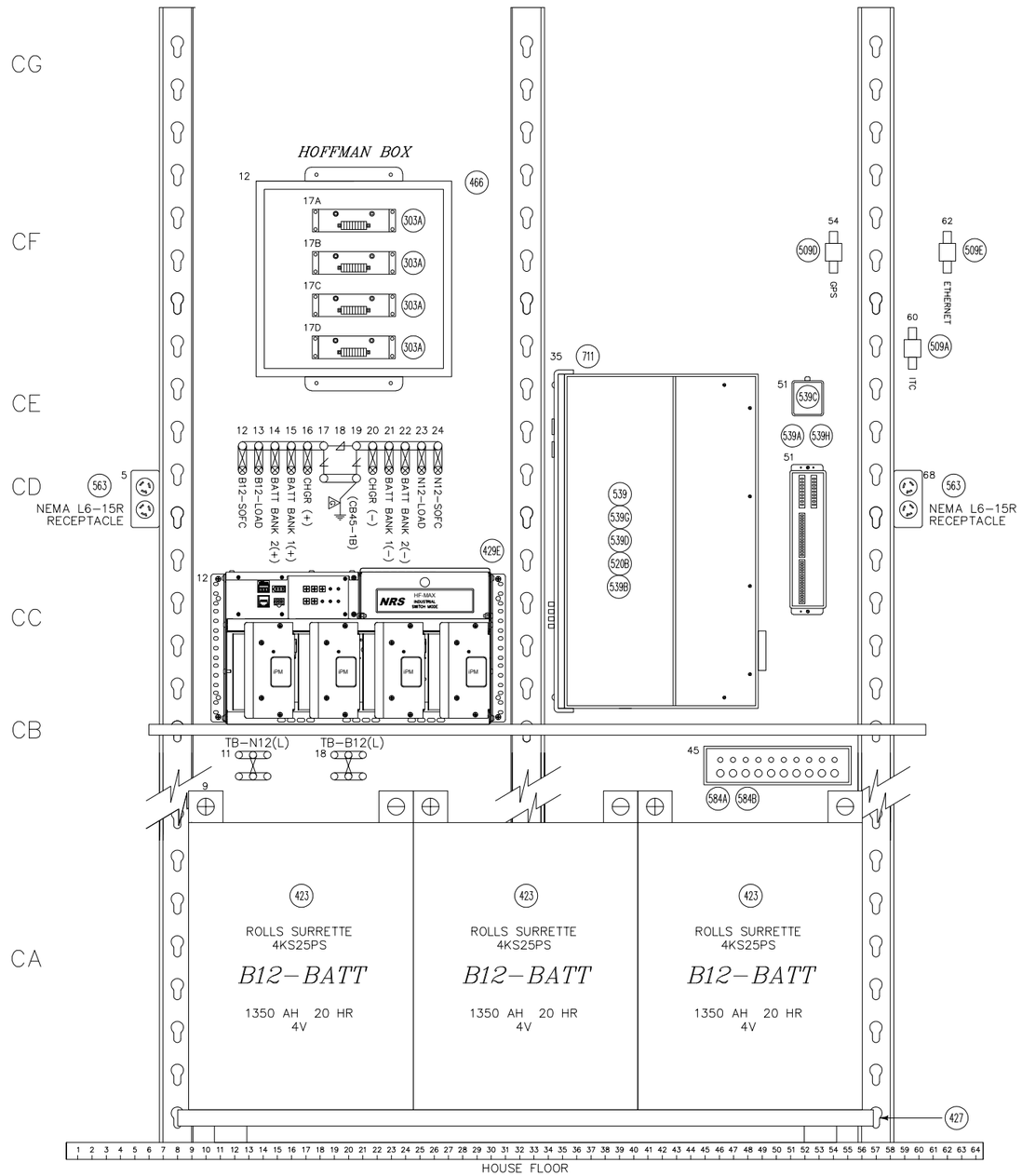

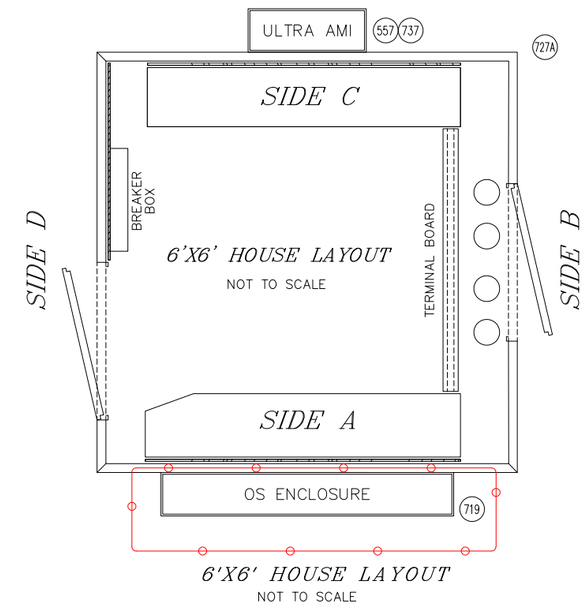

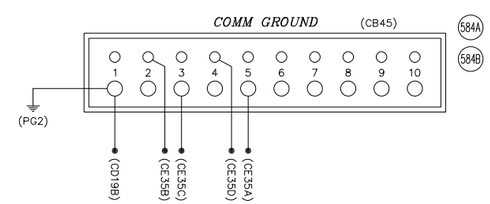

The ALASKA RAILROAD CORPORATION

SIGNAL ENGINEERING — P.O. BOX 107500 , ANCHORAGE , ALASKA 99510-7500

RAINBOW

SSS RAINBOW M.P. 93.06 | NSS RAINBOW M.P. 93.28

MANUAL MONITORED SWITCH

REVISIONS

AS DESIGNED-0.00 08-16-17 OS INSTALLATION PTC SYSTEM DES:BE/WAW CHK:BE/ES	AS IN SERVICE 03-22-17 INSTALL IETMS PTC SYSTEM DES:BE/WAW CHK:BE/ES

DRAWN: RLB
DATE: 05-07-12

DWG NO. 009306-009328

SHEET 22 OF 58

009328_22.dwg 08-16-17

BURNS ENG. REVISIONS

AS DESIGNED-0.00 PTC OS INSTALLATION	SCALE:		
		INITIAL	DATE
	DESIGNED:	WAW	08-16-17
	CHECKED:	ES	08-17-17
	BACK-CHECKED:	WAW	08-17-17
	CORRECTED:	WAW	08-17-17
	VERIFIED:	ES	08-17-17

AS DESIGNED-0.01 PTC OS INSTALLATION	SCALE:		
		INITIAL	DATE
	DESIGNED:	SLF	10-16-17
	CHECKED:	WDW	10-16-17
	BACK-CHECKED:	SLF	10-16-17
	CORRECTED:	SLF	10-16-17
	VERIFIED:	WDW	10-16-17

RAINBOW

THE Burns GROUP ENGINEERING AND CONSTRUCTION

SHEET NUMBER REF. 22

DRAWING NUMBER REF. 009306-009328

BURNS PROJECT REF. 2017-159

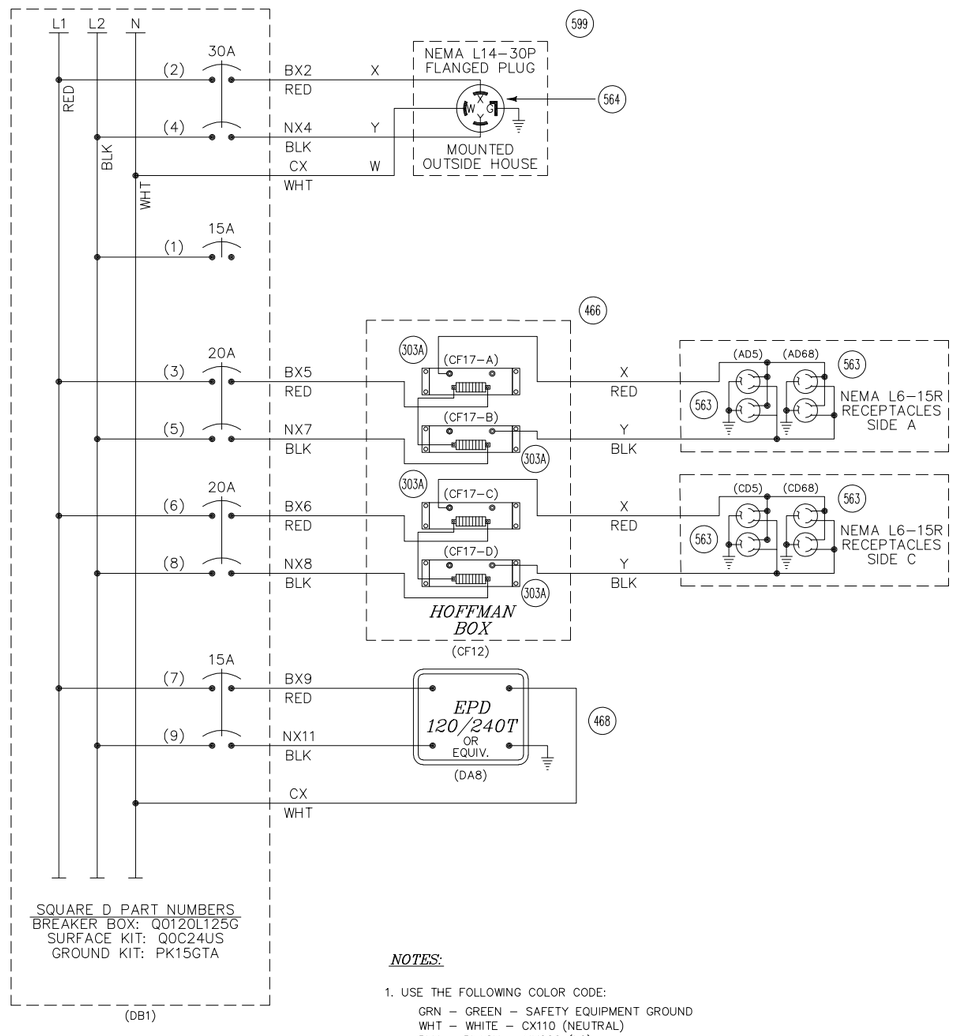

NOTES:

1. USE THE FOLLOWING COLOR CODE:
   GRN – GREEN – SAFETY EQUIPMENT GROUND
   WHT – WHITE – CX110 (NEUTRAL)
   BLK – BLACK – NX220 (L2)
   RED – RED – BX220 (L1)
   EXCEPTIONS TO THE ABOVE COLOR CODE ARE THE PRE-WIRED, SEALED ARRESTOR UNITS MOUNTED ON THE BREAKER BOX WHICH HAVE TWO BLACK AND ONE WHITE WIRE EACH.
2. = WIRE NUT
3. MINIMUM WIRE SIZE
   10 AMP – NO. 14 AWG THHN OR THWN SOLID
   20 AMP – NO. 12 AWG THHN OR THWN SOLID
   30 AMP – NO. 10 AWG THHN OR THWN SOLID
4. GROUND FAULT INTERRUPT (GFCI)
   MUST BE USED ON ALL CIRCUITS SERVING CONVENIENCE OUTLETS AND ANY EQUIPMENT OUTSIDE THE BUNGALOW. RECEPTACLE MOUNTED GFCI MAY BE USED INSTEAD OF BREAKER TYPE.
5. ALL GROUND WIRES RUN TO BREAKER BOX GROUND BUSS

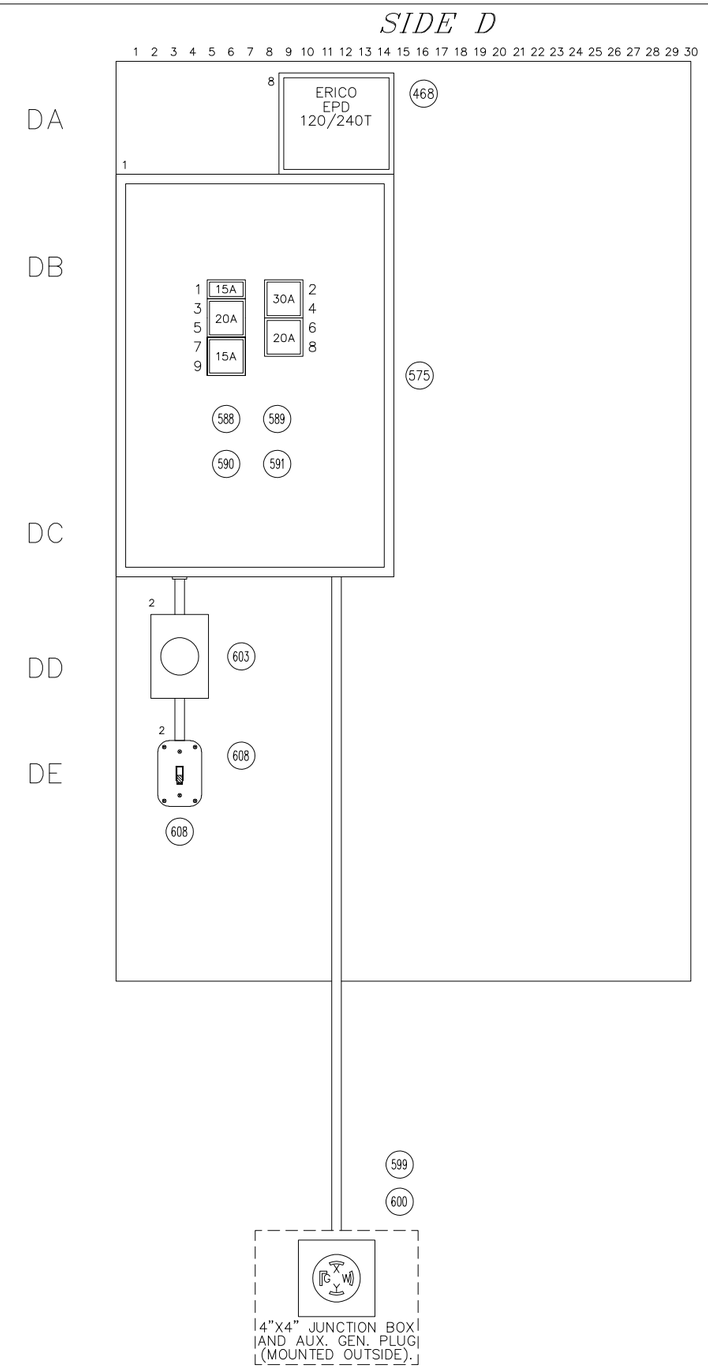

The ALASKA RAILROAD CORPORATION

SIGNAL ENGINEERING P.O. BOX 107500 , ANCHORAGE , ALASKA 99510-7500

RAINBOW

SSS RAINBOW M.P. 93.06 | NSS RAINBOW M.P. 93.28

MANUAL MONITORED SWITCH

REVISIONS

				AS IN SERVICE 03-22-17 INSTALL IETMS PTC SYSTEM DES:BE/WAW CHK:BE/ES	

DRAWN: *RLB*
DATE: 05-07-12

DWG NO. 009306-009328

SHEET 23 OF 58

009328_23.dwg 08-16-17

BUNGALOW OS ENCLOSURE

ENCLOSURE TYPE: NEMA 3R
SIZE: 48H X 36W X 16D

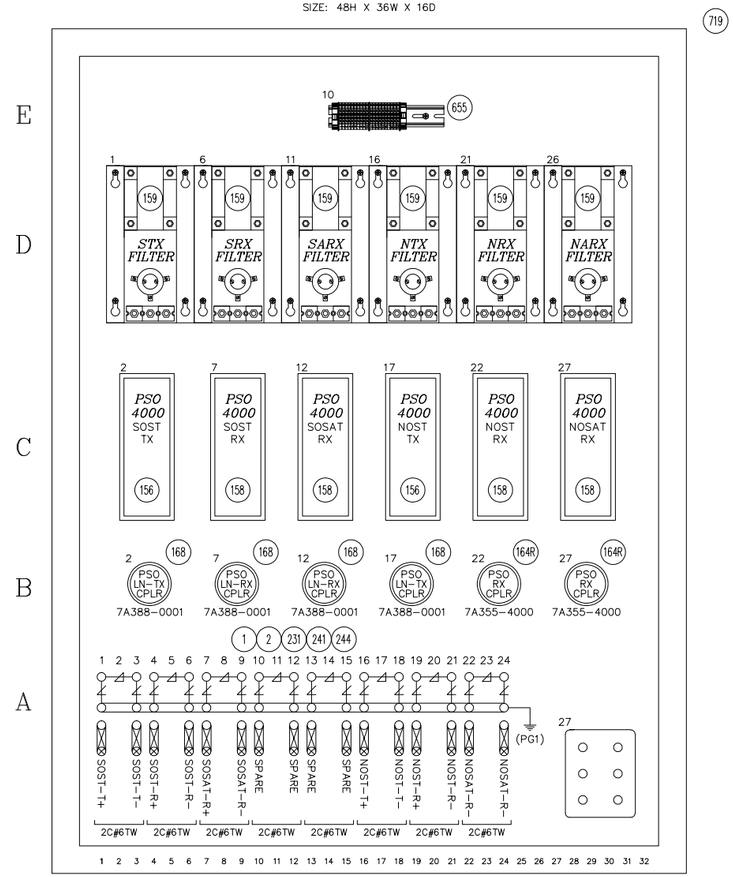

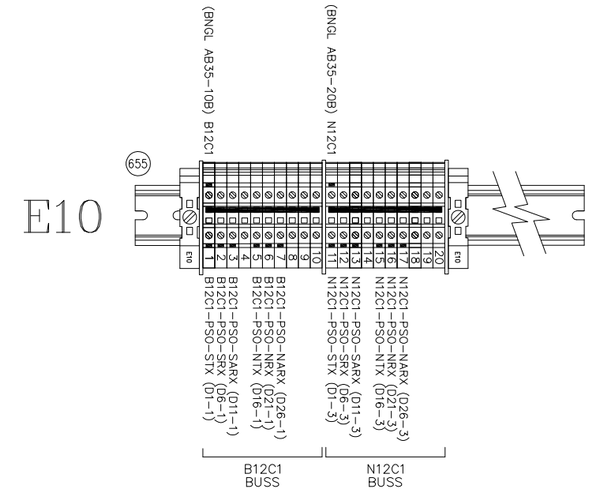

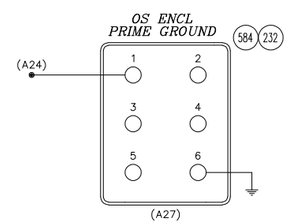

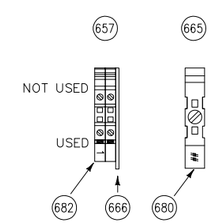

ALL NEW

NOTES:

1. ALL GROUND WIRES IN ENCLOSURE TO BE #6 AWG GREEN TEFZEL UNLESS OTHERWISE NOTED.
2. USE 10 POLE JUMPER MAT REF 668 FOR TERMINAL 657 (1-10 & 11-20)

REVISIONS

AS DESIGNED-0.00 08-16-17
OS INSTALLATION
PTC SYSTEM
DES: BE/WAW CHK: BE/ES

The ALASKA RAILROAD CORPORATION
SIGNAL ENGINEERING P.O. BOX 107500 , ANCHORAGE , ALASKA 99510-7500

RAINBOW
SSS RAINBOW M.P. 93.06 | NSS RAINBOW M.P. 93.28
MANUAL MONITORED SWITCH

DRAWN: BE
DATE: 08-16-17
DWG NO. 009306-009328
SHEET 25 OF 58

009328_25.dwg 08-16-17

BURNS ENG. REVISIONS

AS DESIGNED-0.00 PTC OS INSTALLATION	SCALE:		
		INITIAL	DATE
	DESIGNED:	WAW	08-16-17
	CHECKED:	ES	08-17-17
	BACK-CHECKED:	WAW	08-17-17
	CORRECTED:	WAW	08-17-17
	VERIFIED:	ES	08-17-17

AS DESIGNED-0.01 PTC OS INSTALLATION	SCALE:		
		INITIAL	DATE
	DESIGNED:	SLF	10-16-17
	CHECKED:	WDW	10-16-17
	BACK-CHECKED:	SLF	10-16-17
	CORRECTED:	SLF	10-16-17
	VERIFIED:	WDW	10-16-17

RAINBOW

THE Burns GROUP ENGINEERING AND CONSTRUCTION

SHEET NUMBER REF. 25
DRAWING NUMBER REF. 009306-009328
BURNS PROJECT REF. 2017-159

SSS CLEARANCE ENCLOSURE

ENCLOSURE TYPE: NEMA 3R
SIZE: 48H X 36W X 16D

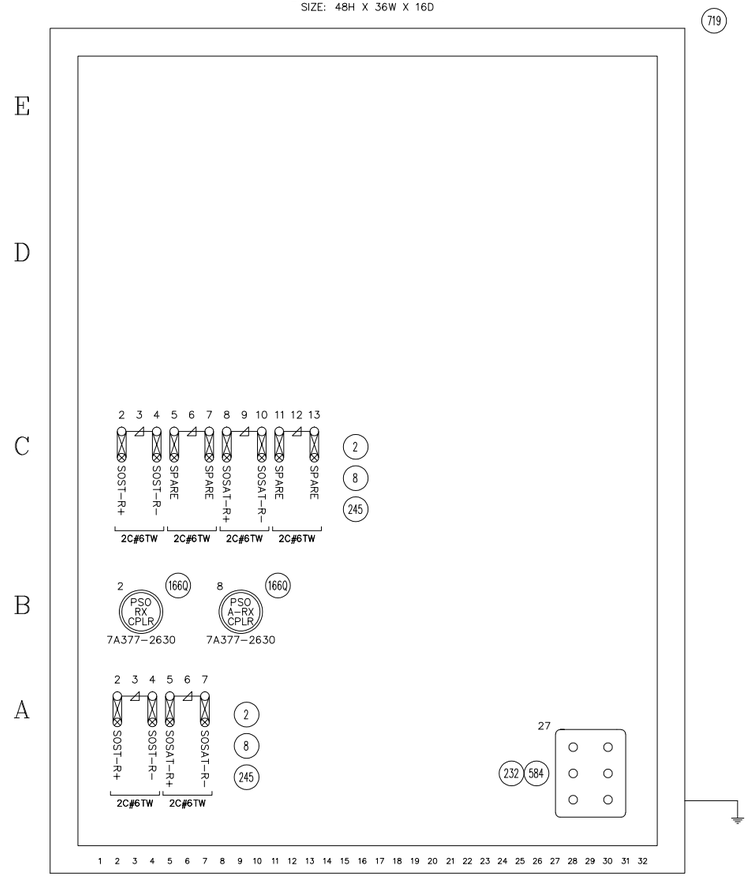

SSS SWITCH POINT ENCLOSURE

ENCLOSURE TYPE: NEMA 3R
SIZE: 48H X 36W X 16D

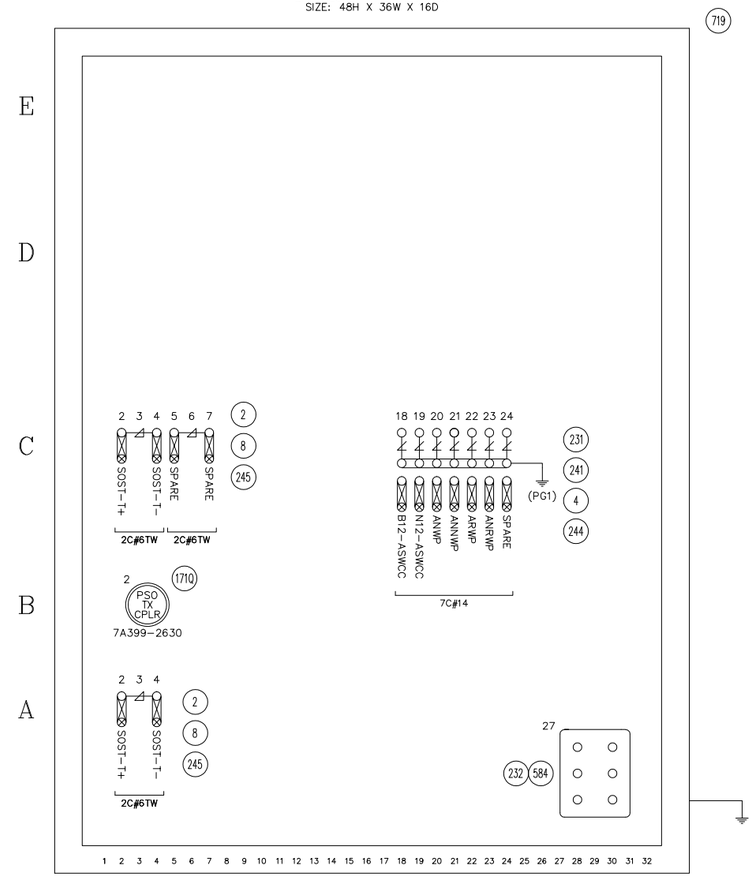

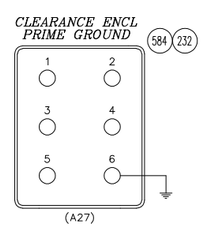

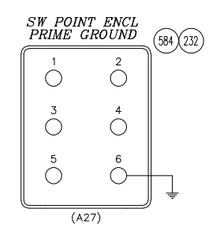

NOTES:

1. FROM GROUND PLATE TO GROUND ROD SOFT DRAWN #6.

ALL NEW

REVISIONS

AS DESIGNED-0.00 08-16-17
OS INSTALLATION
PTC SYSTEM
DES:BE/WAW CHK:BE/ES

The ALASKA RAILROAD CORPORATION
SIGNAL ENGINEERING P.O. BOX 107500 , ANCHORAGE , ALASKA 99510-7500

RAINBOW

SSS RAINBOW M.P. 93.06 | NSS RAINBOW M.P. 93.28

MANUAL MONITORED SWITCH

DRAWN: *BE*
DATE: 08-16-17

DWG NO. 009306-009328

SHEET 26 OF 58

009328_26.dwg 08-16-17

BURNS ENG. REVISIONS

AS DESIGNED-0.00 PTC OS INSTALLATION

SCALE:	INITIAL	DATE
DESIGNED:	WAW	08-16-17
CHECKED:	ES	08-17-17
BACK-CHECKED:	WAW	08-17-17
CORRECTED:	WAW	08-17-17
VERIFIED:	ES	08-17-17

AS DESIGNED-0.01 PTC OS INSTALLATION

SCALE:	INITIAL	DATE
DESIGNED:	SLF	10-16-17
CHECKED:	WDW	10-16-17
BACK-CHECKED:	SLF	10-16-17
CORRECTED:	SLF	10-16-17
VERIFIED:	WDW	10-16-17

RAINBOW

THE Burns GROUP
ENGINEERING AND CONSTRUCTION

SHEET NUMBER REF. 26
DRAWING NUMBER REF. 009306-009328
BURNS PROJECT REF. 2017-159

NSS SWITCH POINT ENCLOSURE

ENCLOSURE TYPE: NEMA 3R
SIZE: 48H X 36W X 16D

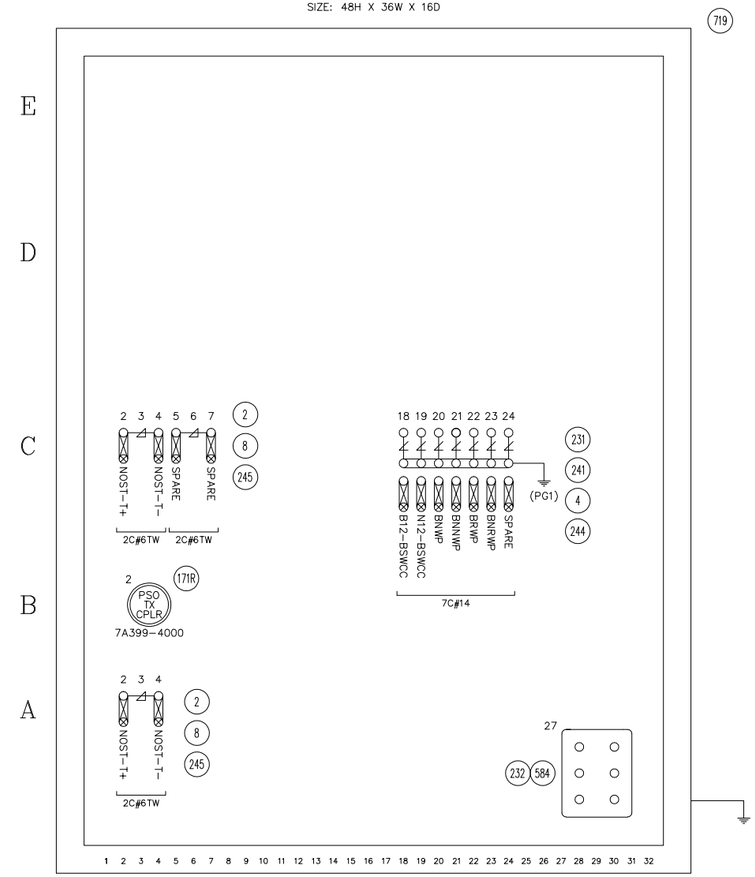

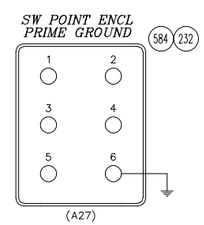

NOTES:

1. FROM GROUND PLATE TO GROUND ROD SOFT DRAWN #6.

ALL NEW

REVISIONS

					AS DESIGNED-0.00 08-16-17 OS INSTALLATION PTC SYSTEM DES:BE/WAW CHK:BE/ES

The ALASKA RAILROAD CORPORATION
SIGNAL ENGINEERING P.O. BOX 107500 , ANCHORAGE , ALASKA 99510-7500

RAINBOW

SSS RAINBOW M.P. 93.06 | NSS RAINBOW M.P. 93.28

MANUAL MONITORED SWITCH

DRAWN: BE
DATE: 08-16-17

DWG NO. 009306-009328

SHEET 27 OF 58

009328_27.dwg 08-16-17

BURNS ENG. REVISIONS

AS DESIGNED-0.00 PTC OS INSTALLATION

SCALE:	INITIAL	DATE
DESIGNED:	WAW	08-16-17
CHECKED:	ES	08-17-17
BACK-CHECKED:	WAW	08-17-17
CORRECTED:	WAW	08-17-17
VERIFIED:	ES	08-17-17

AS DESIGNED-0.01 PTC OS INSTALLATION

SCALE:	INITIAL	DATE
DESIGNED:	SLF	10-16-17
CHECKED:	WDW	10-16-17
BACK-CHECKED:	SLF	10-16-17
CORRECTED:	SLF	10-16-17
VERIFIED:	WDW	10-16-17

RAINBOW

THE Burns GROUP ENGINEERING AND CONSTRUCTION

SHEET NUMBER REF. 27

DRAWING NUMBER REF. 009306-009328

BURNS PROJECT REF. 2017-159

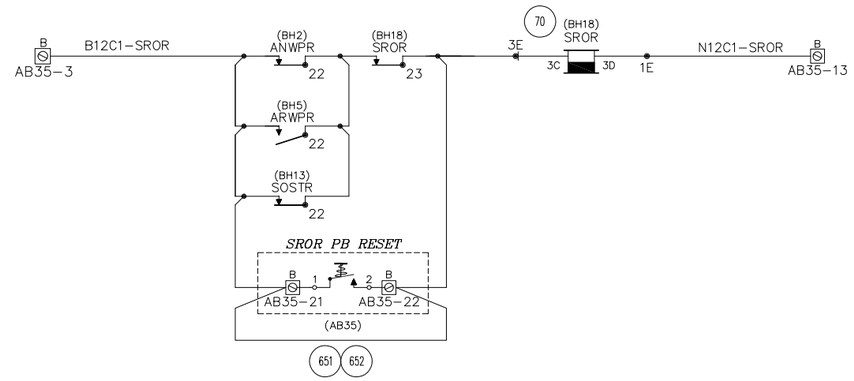

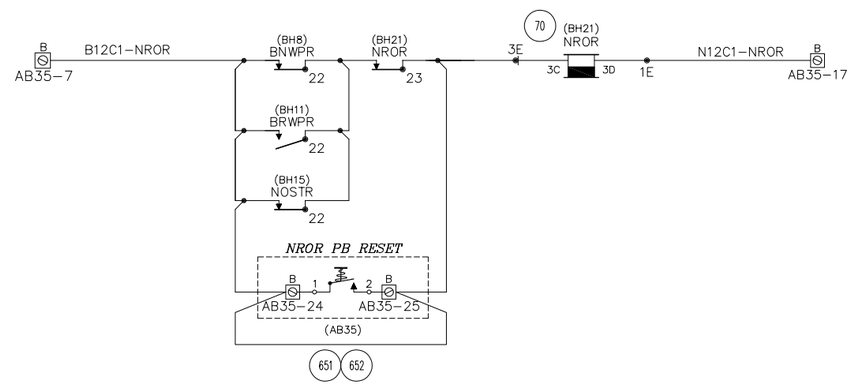

ALL NEW

NOTES:

1. ALL WIRING TO BE #16 AWG FLEX TEFZEL UNLESS OTHERWISE NOTED.
2. CIRCUITS ON THIS SHEET FOR FUTURE USE.

REVISIONS

					AS DESIGNED-0.00 08-16-17 OS INSTALLATION PTC SYSTEM DES:BE/WAW CHK:BE/ES

The ALASKA RAILROAD CORPORATION

SIGNAL ENGINEERING P.O. BOX 107500 , ANCHORAGE , ALASKA 99510-7500

RAINBOW

SSS RAINBOW M.P. 93.06 | NSS RAINBOW M.P. 93.28

MANUAL MONITORED SWITCH

DRAWN: *BE*
DATE: 08-16-17

DWG NO. 009306-009328

SHEET 29 OF 58

009328_29.dwg 08-16-17

BURNS ENG.

REVISIONS

AS DESIGNED-0.00 PTC OS INSTALLATION

SCALE:	INITIAL	DATE
DESIGNED:	WAW	08-16-17
CHECKED:	ES	08-16-17
BACK-CHECKED:	WAW	08-16-17
CORRECTED:	WAW	08-16-17
VERIFIED:	ES	08-16-17

AS DESIGNED-0.01 PTC OS INSTALLATION

SCALE:	INITIAL	DATE
DESIGNED:	SLF	10-16-17
CHECKED:	WDW	10-16-17
BACK-CHECKED:	SLF	10-16-17
CORRECTED:	SLF	10-16-17
VERIFIED:	WDW	10-16-17

RAINBOW

THE Burns GROUP ENGINEERING AND CONSTRUCTION

SHEET NUMBER REF. 29

DRAWING NUMBER REF. 009306-009328

BURNS PROJECT REF. 2017-159

B12 CHARGER BUSS

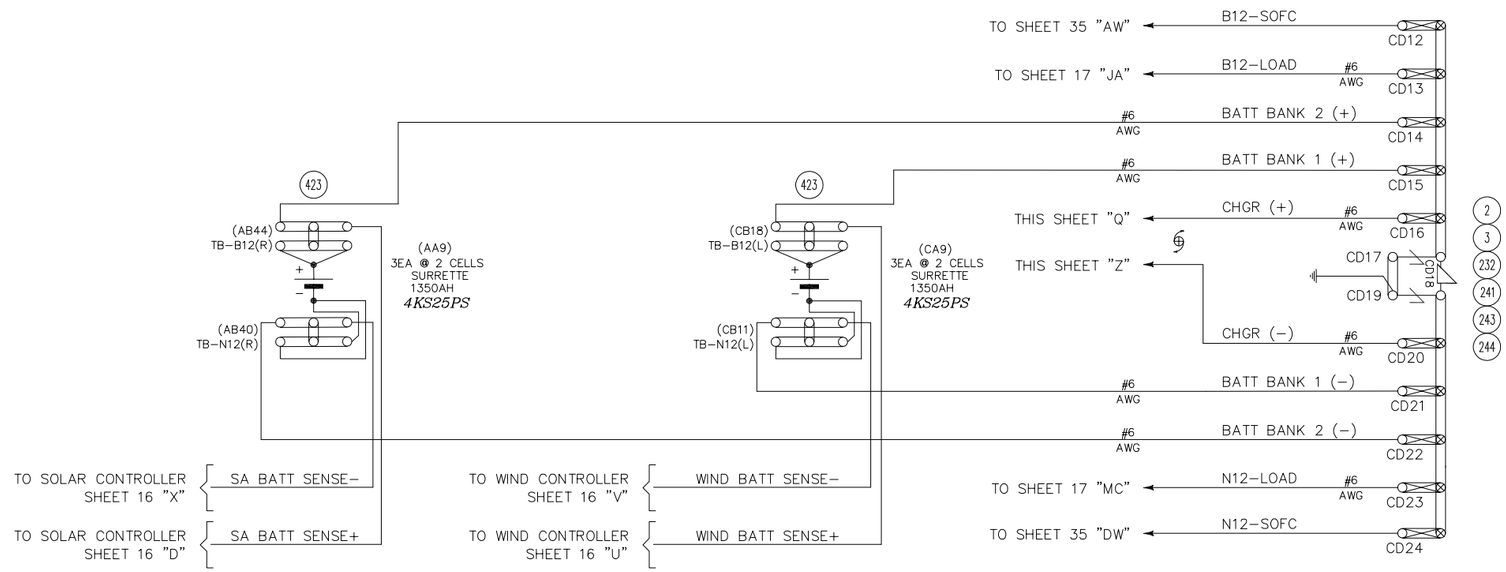

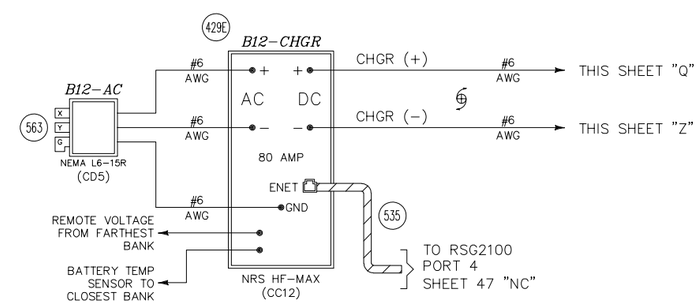

NOTES:

1. ALL WIRING TO BE #16 AWG FLEX TEFZEL UNLESS OTHERWISE NOTED.
3. ALL GROUND WIRES TO BE #6 AWG GREEN FLEX TEFZEL UNLESS OTHERWISE NOTED.
4. MANUFACTURER RECOMMENDS THAT ALL LEADS BETWEEN BATTERY BANKS & BUSS BE OF EQUAL LENGTH.
5. CHARGER WILL AUTOSENSE 120/240 VOLT A/C.
6. BATTERIES ARE TO BE REUSED & CONNECTED TO THE NEW B12 CHARGER BUSS.

REVISIONS

					AS IN SERVICE 03-22-17 INSTALL IETMS PTC SYSTEM DES:BE/WAW CHK:BE/ES

The ALASKA RAILROAD CORPORATION

SIGNAL ENGINEERING P.O. BOX 107500 , ANCHORAGE , ALASKA 99510-7500

RAINBOW

SSS RAINBOW M.P. 93.06 | NSS RAINBOW M.P. 93.28

MANUAL MONITORED SWITCH

DRAWN: *BE*
DATE: 07-25-16

DWG NO. 009306-009328

SHEET 33 OF 58

009328_33.dwg 08-16-17

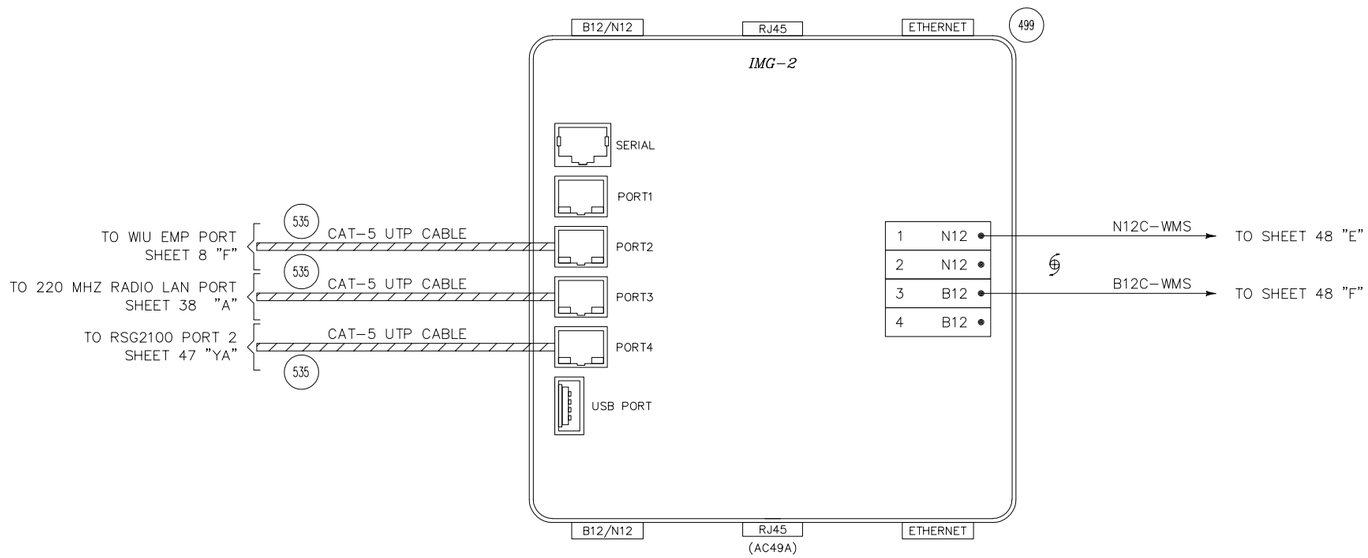

NOTES:

1. ALL WIRING TO BE #16 AWG FLEX TEFZEL UNLESS OTHERWISE NOTED.

The ALASKA RAILROAD CORPORATION

SIGNAL ENGINEERING P.O. BOX 107500 , ANCHORAGE , ALASKA 99510-7500

RAINBOW

SSS RAINBOW M.P. 93.06 | NSS RAINBOW M.P. 93.28

MANUAL MONITORED SWITCH

REVISIONS

AS IN SERVICE 03-22-17
INSTALL IETMS
PTC SYSTEM
DES:BE/WAW CHK:BE/ES

DRAWN: *BE*
DATE: 07-25-16

DWG NO. 009306-009328

SHEET 36 OF 58

009328_36.dwg 08-16-17

PTC APPLICATION CONFIGURATION TABLE

WIU SETTINGS

GENERAL SETTINGS	
WIU ADDRESS	TBD
ENCRYPTED HMAC KEY:	–
BEACON CONTINUOUS	TRUE
BEACON RATE	3000 ms
BEACON BIT TIME	300 s
BEACON END TIME	120 s
MAX BEACON INTERVAL	0 s
BEACON ON CHANGE	YES
EMP SETTINGS	
EMP SOURCE ADDRESS	arr.w.052351:01.wiu
EMP DEST. ADDRESS	xx.1.x.00000:tmc
EMP FLAGS (TIME FORMAT)	ABSOLUTE
EMP FLAGS (ENCRYPTION)	DISABLED
EMP FLAGS (COMPRESSION)	DISABLED
EMP FLAGS (DATA INTGRTY)	APP SPECIFIC
TTL (TIMED BEACON)	12
QoS (TIMED BEACON)	1648
TTL (WIU STAT RESPONSE)	12
QoS (WIU STAT RESPONSE)	576
CLASS D SETTINGS	
DESTINATION IP ADDRESS	192.168.233.149
DESTINATION IP PORT	TBD
MODE	BIDIRECTIONAL
LOG TRAFFIC	NO
KEEP ALIVE INTERVAL	10000 ms
KEEP ALIVE ACK TIMEOUT	5000 ms
DATA ACK ENABLED	YES
DATA ACK TIMEOUT	5000 ms
NAK RETRIES	3
RETRANSMIT DELAY	0
CONN ATTEMPT TIMEOUT	20000 ms
CONN DELAY	1000 ms
CONN RETRY LIMIT	–1
RECONNECTION LIMIT	–1
TIME SETTINGS	
TIME MESS. BEFORE WSM	5 MESSAGES
TIME MESSAGE DEVIATION	1 s
IGNORED TIME DIFFERENCE	3 s
MAX TIME CHANGE SEC	3 s
MAX TIME CHANGE MIN	60 min
LRM MAX TIME DIFFERENCE	3 s
NO TIME SYNC MESSAGES	6 min
TIME RE–SYNC ENABLE	TRUE

ETHERNET CONFIGURATION

GENERAL SETTINGS	
GATEWAY	192.168.233.145
SIG SYS ETHERNET SETTINGS	FALSE
ETHERNET PORT 1	
IP ADDRESS	192.168.233.151
SUBNET MASK	255.255.255.240
GUI ACCESS LEVEL	READ & WRITE
ETHERNET PORT 2	
IP ADDRESS	0.0.0.0
SUBNET MASK	255.255.255.0
GUI ACCESS LEVEL	READ & WRITE
DHCP SERVER SETTINGS – ETHERNET PORT 1	
ENABLED	DISABLED
IP POOL START ADDRESS	192.168.0.12
IP POOL END ADDRESS	192.168.0.43
DEFAULT GATEWAY	0.0.0.0
DHCP SERVER SETTINGS – ETHERNET PORT 2	
ENABLED	DISABLED
IP POOL START ADDRESS	0.0.0.0
IP POOL END ADDRESS	0.0.0.0
DEFAULT GATEWAY	0.0.0.0
WEB INTERFACE SETTINGS	
WEB PORT NUMBER	80
INACTIVITY TIMEOUT MIN	60
TRUSTED SOURCE 1	
ENABLED	DISABLED
IP ADDRESS	0.0.0.0
SUBNET MASK	0.0.0.0
TRUSTED SOURCE 2	
ENABLED	DISABLED
IP ADDRESS	0.0.0.0
SUBNET MASK	0.0.0.0

I/O CONFIGURATION

GENERAL SETTINGS	
REMOTE ID	0
LOCAL NETWORK ID	0
DESTINATION UDP PORT	8280
BEACON HOLDOFF TIME MSEC	0
VITAL INPUTS	
INPUT CONFIGURATION	4 IN
VITAL INPUT 1 MODE	GENERAL PURPOSE
VITAL INPUT 2 MODE	GENERAL PURPOSE
VITAL INPUT 3 MODE	GENERAL PURPOSE
VITAL INPUT 4 MODE	GENERAL PURPOSE
COMMON RP200x SETTINGS	
MAX SEND DIFF MSEC	7200
MAX RECEIVE DIFF MSEC	7200
RP2000 SETTINGS	
MESSAGE INTERVAL MSEC	248
LINK TIMEOUT MSEC	1000
RP2009 SETTINGS	
UPDATE PERIOD MSEC	248
ACK TIMEOUT MSEC	992
HEARTBEAT MSG INT MSEC	4960

VITAL REMOTES

VITAL REMOTE 1	
REMOTE ID	1
MODULE TYPE	8 VIn
LOCAL NETWORK ID	1
REMOTE NETWORK ID	0
SOURCE IP ADDRESS	192.168.233.151
DEST IP ADDRESS	192.168.233.152
DEST IP PORT	8280
SUBNET MASK	255.255.255.0
DEFAULT GATEWAY	192.168.233.145
RP200x	RP2009
VITAL INPUT MODE	
VITAL INPUT 1 MODE	GENERAL PURPOSE
VITAL INPUT 2 MODE	GENERAL PURPOSE
VITAL INPUT 3 MODE	GENERAL PURPOSE
VITAL INPUT 4 MODE	GENERAL PURPOSE
VITAL INPUT 5 MODE	GENERAL PURPOSE
VITAL INPUT 6 MODE	GENERAL PURPOSE
VITAL INPUT 7 MODE	GENERAL PURPOSE
VITAL INPUT 8 MODE	GENERAL PURPOSE

TELNET SETTINGS

TELNET PORT SETTINGS	
TELNET PORT NUMBER	23
INACTIVITY TIMEOUT MIN	5
TELNET ENABLED PORT 1	TRUE
TELNET ENABLED PORT 2	FALSE
TELNET TRUSTED SOURCE 1	
ENABLED	DISABLED
IP ADDRESS	0.0.0.0
SUBNET MASK	0.0.0.0
TELNET TRUSTED SOURCE 2	
ENABLED	DISABLED
IP ADDRESS	0.0.0.0
SUBNET MASK	0.0.0.0

TIME SYNCH SETTINGS

GENERAL SETTINGS	
TIME SYNCH SOURCE	EMP
TIME ZONE	–9
DST START MONTH	MAR
DST START WEEK	2
DST END MONTH	NOV
DST END WEEK	1
EMP TIME MULTICAST IP	239.255.0.4
EMP TIME MULTICAST PORT	32768
SNTP SERVER UPDATE MIN	60
SNTP SERVER 1 ADDRESS	0.0.0.0
SNTP SERVER 2 ADDRESS	0.0.0.0

PTC TRACK DATABASE TABLE

DEVICE CONFIGURATION

WAYSIDE DEVICE COUNT – 6	
TIMESTAMP	TBD
WIU NAME	ARR–WIU–SSS_RAIN
WIU ADDRESS	TBD
APPLICATION PROG. NAME	SSS_RAIN.ptcbmap
APPLICATION PROG. CRC	TBD
CONFIGURATION CRC	TBD
LIBRARY CRC	4EF22829
DEVICE STATUS CFG SCAC	ARR
DEVICE STATUS CFG TBL ID	1
DEVICE STATUS CFG VERSION	0

DEVICE 1

SITE DEVICE ID	TBD
DEVICE TYPE	SWITCH
DESCRIPTION	SW_A
SITE NAME	RAIN
TRACK NAME	M
SUBDIVISION NUMBER	3
MILEPOST	TBD
WIU STATUS INDEX	TBD
DIRECTION	TBD

DEVICE 2

SITE DEVICE ID	TBD
DEVICE TYPE	SWITCH
DESCRIPTION	SW_B
SITE NAME	RAIN
TRACK NAME	M
SUBDIVISION NUMBER	3
MILEPOST	TBD
WIU STATUS INDEX	TBD
DIRECTION	TBD

DEVICE 3

SITE DEVICE ID	TBD
DEVICE TYPE	HAZARD DETECTOR
DESCRIPTION	HD_1
SITE NAME	RAIN
TRACK NAME	M
SUBDIVISION NUMBER	1
MILEPOST	TBD
WIU STATUS INDEX	TBD
DIRECTION	TBD

DEVICE 4

SITE DEVICE ID	TBD
DEVICE TYPE	HAZARD DETECTOR
DESCRIPTION	HD_2
SITE NAME	RAIN
TRACK NAME	M
SUBDIVISION NUMBER	3
MILEPOST	TBD
WIU STATUS INDEX	TBD
DIRECTION	TBD

DEVICE 5

SITE DEVICE ID	TBD
DEVICE TYPE	HAZARD DETECTOR
DESCRIPTION	HD_3
SITE NAME	RAIN
TRACK NAME	M
SUBDIVISION NUMBER	3
MILEPOST	TBD
WIU STATUS INDEX	TBD
DIRECTION	TBD

DEVICE 6

SITE DEVICE ID	TBD
DEVICE TYPE	HAZARD DETECTOR
DESCRIPTION	HD_4
SITE NAME	RAIN
TRACK NAME	M
SUBDIVISION NUMBER	3
MILEPOST	TBD
WIU STATUS INDEX	TBD
DIRECTION	TBD

PTC INFORMATION TO BE INCLUDED IN AS IN SERVICE DRAWINGS.

REVISIONS

					AS IN SERVICE 03–22–17 INSTALL IETMS PTC SYSTEM DES:BE/WAW CHK:BE/ES

The ALASKA RAILROAD CORPORATION
SIGNAL ENGINEERING P.O. BOX 107500 , ANCHORAGE , ALASKA 99510–7500

RAINBOW

SSS RAINBOW M.P. 93.06 | NSS RAINBOW M.P. 93.28

MANUAL MONITORED SWITCH

DRAWN: *BE*
DATE: 07–25–16

DWG NO. 009306–009328

009328_37.dwg 08–16–17

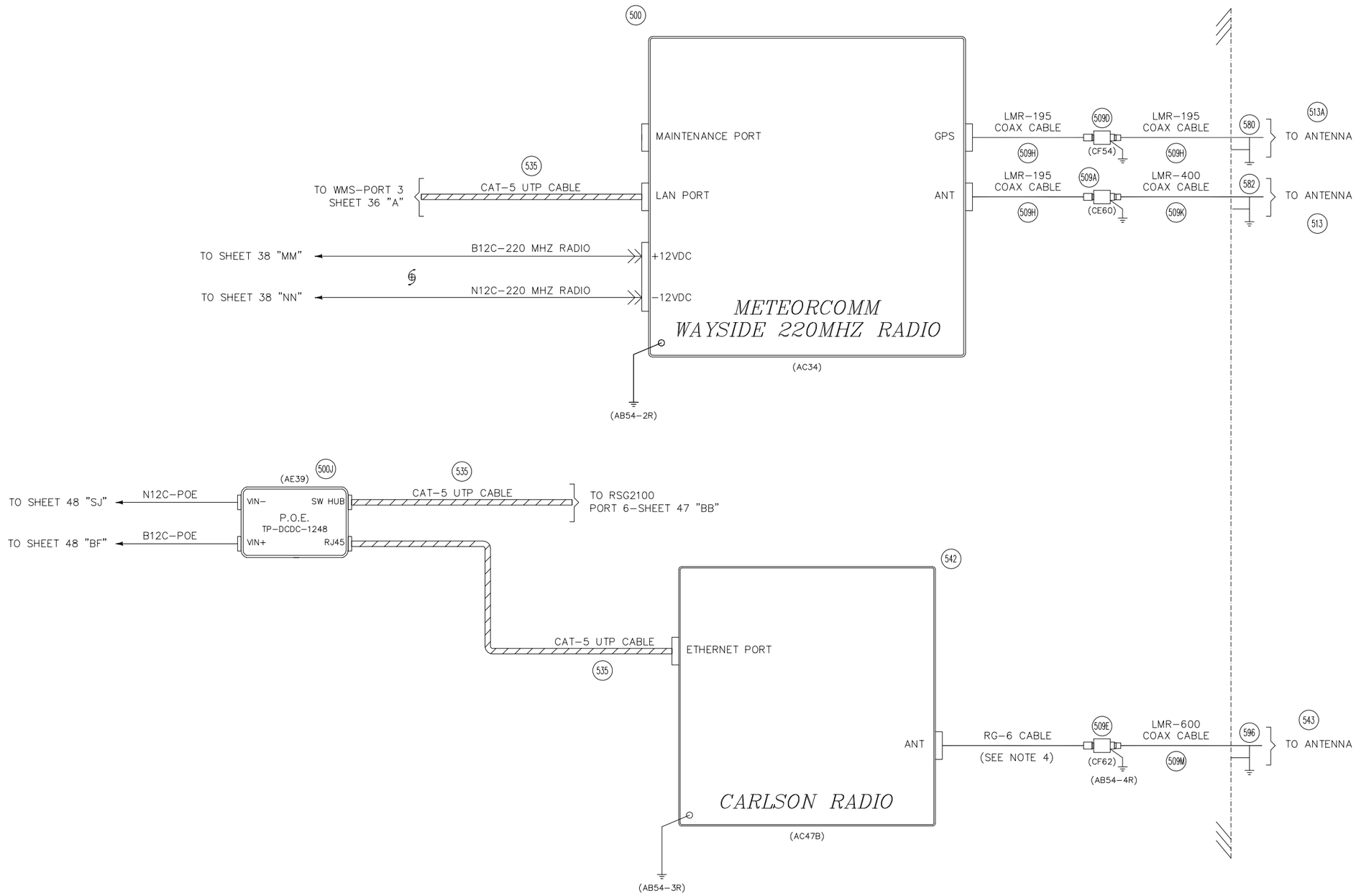

NOTES:

1. ALL WIRING TO BE #16 AWG FLEX TEFZEL UNLESS OTHERWISE NOTED.
2. ALL GROUND WIRES TO BE #6 AWG GREEN FLEX TEFZEL UNLESS OTHERWISE NOTED.
3. ALL COAX ANTENNA CABLES TO BE GROUNDED TO OUTSIDE OF BUNGALOW USING A TIN GROUND BAR (MAT REF 595).
4. RG-6 CABLE INCLUDED WITH CARLSON RADIO ANTENNA (MAT REF 543).

The ALASKA RAILROAD CORPORATION

SIGNAL ENGINEERING — P.O. BOX 107500 , ANCHORAGE , ALASKA 99510-7500

RAINBOW

SSS RAINBOW M.P. 93.06 | NSS RAINBOW M.P. 93.28

MANUAL MONITORED SWITCH

REVISIONS

					AS IN SERVICE 03-22-17 INSTALL IETMS PTC SYSTEM DES:BE/WAW CHK:BE/ES

DRAWN: *BE*
DATE: 07-25-16

DWG NO. 009306-009328

SHEET 38 OF 58

009328_38.dwg 08-16-17

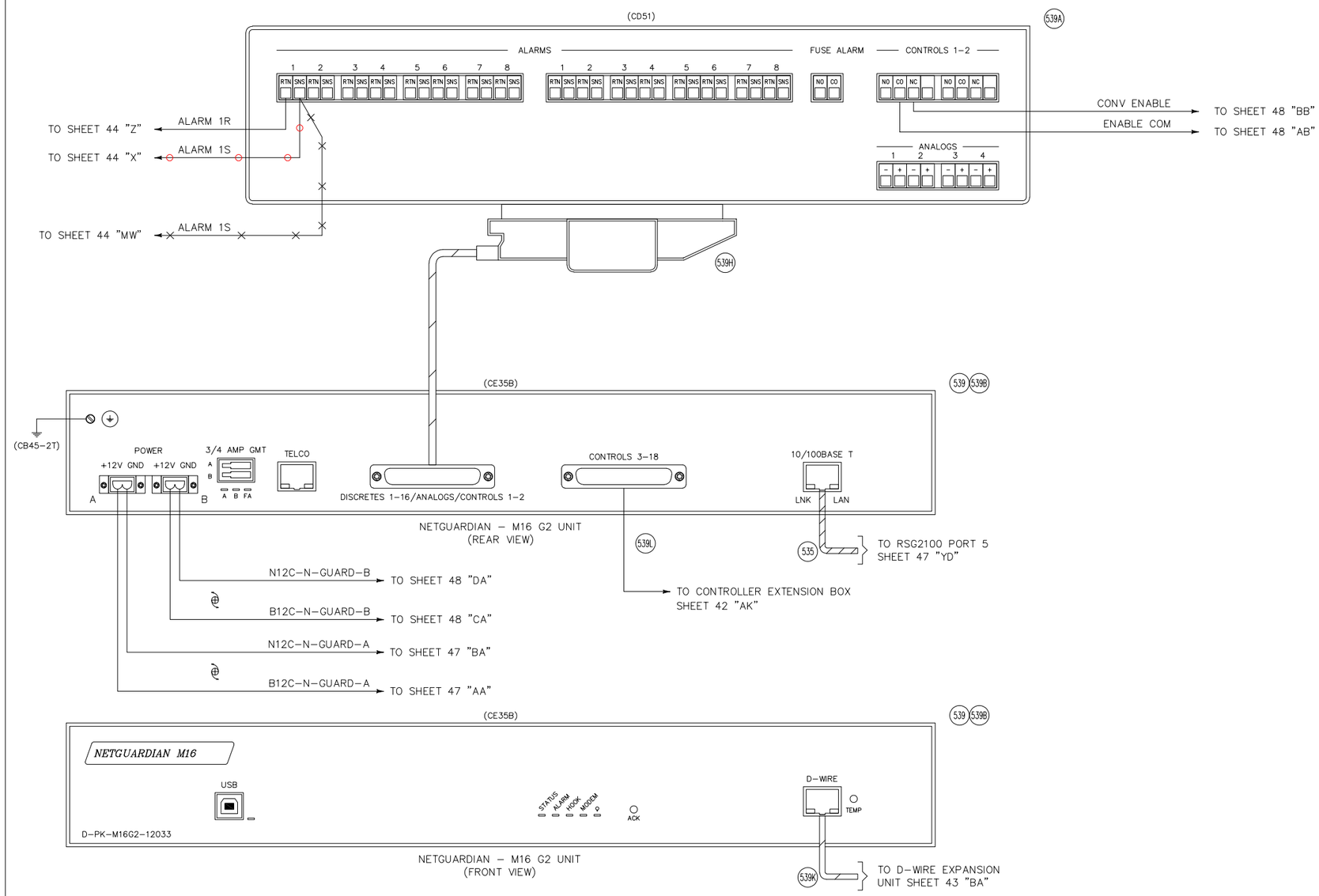

NOTES:

1. ALL WIRING TO BE #16 AWG FLEX TEFZEL UNLESS OTHERWISE NOTED.
2. ALL GROUND WIRES TO BE #6 AWG GREEN FLEX TEFZEL UNLESS OTHERWISE NOTED.

The ALASKA RAILROAD CORPORATION

SIGNAL ENGINEERING — P.O. BOX 107500 , ANCHORAGE , ALASKA 99510–7500

RAINBOW

SSS RAINBOW M.P. 93.06 | NSS RAINBOW M.P. 93.28

MANUAL MONITORED SWITCH

REVISIONS

AS DESIGNED–0.00 08–16–17 OS INSTALLATION PTC SYSTEM DES:BE/WAW CHK:BE/ES	AS IN SERVICE 03–22–17 INSTALL IETMS PTC SYSTEM DES:BE/WAW CHK:BE/ES

DRAWN: *BE*
DATE: 07–25–16

DWG NO. 009306–009328

SHEET 41 OF 58

009328_41.dwg 08–16–17

BURNS ENG.

REVISIONS

AS DESIGNED–0.00 PTC OS INSTALLATION

SCALE:	INITIAL	DATE
DESIGNED:	WAW	08–16–17
CHECKED:	ES	08–17–17
BACK–CHECKED:	WAW	08–17–17
CORRECTED:	WAW	08–17–17
VERIFIED:	ES	08–17–17

AS DESIGNED–0.01 PTC OS INSTALLATION

SCALE:	INITIAL	DATE
DESIGNED:	SLF	10–16–17
CHECKED:	WDW	10–16–17
BACK–CHECKED:	SLF	10–16–17
CORRECTED:	SLF	10–16–17
VERIFIED:	WDW	10–16–17

RAINBOW

THE Burns GROUP ENGINEERING AND CONSTRUCTION

SHEET NUMBER REF. 41

DRAWING NUMBER REF. 009306–009328

BURNS PROJECT REF. 2017–159

CONTROLLER EXTENSION BOX
(FRONT VIEW)

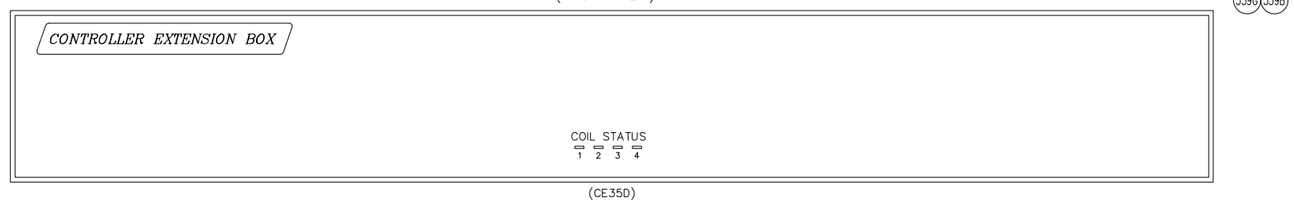

CONTROLLER EXTENSION BOX
(REAR VIEW)

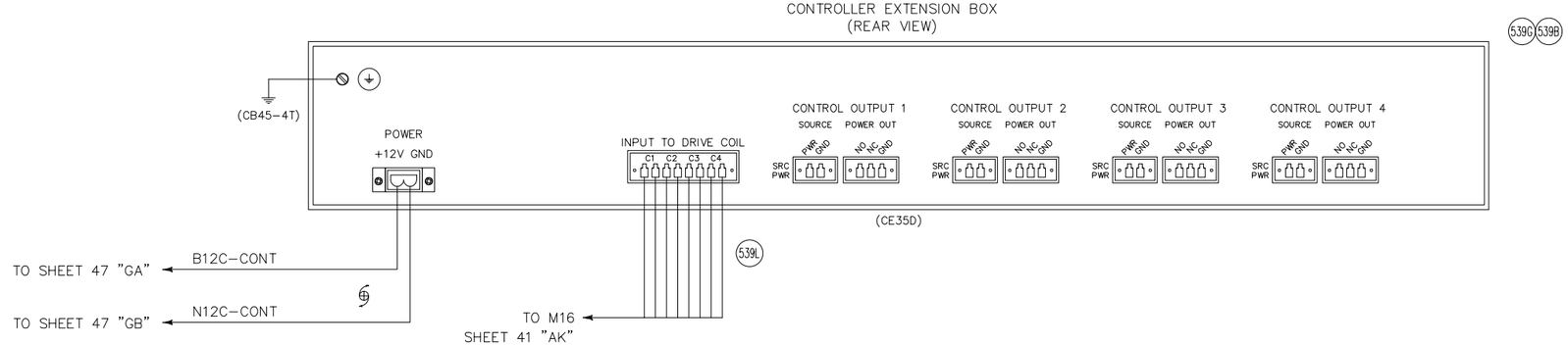

NOTES:

1. ALL WIRING TO BE #16 AWG FLEX TEFZEL UNLESS OTHERWISE NOTED.
2. ALL GROUND WIRES TO BE #6 AWG GREEN FLEX TEFZEL UNLESS OTHERWISE NOTED.

REVISIONS

					AS IN SERVICE 03-22-17 INSTALL IETMS PTC SYSTEM DES:BE/WAW CHK:BE/ES

The ALASKA RAILROAD CORPORATION
SIGNAL ENGINEERING P.O. BOX 107500 , ANCHORAGE , ALASKA 99510-7500

RAINBOW
SSS RAINBOW M.P. 93.06 | NSS RAINBOW M.P. 93.28
MANUAL MONITORED SWITCH

DRAWN: *BE*
DATE: 07-25-16
DWG NO. 009306-009328
SHEET 42 OF 58

009328_42.dwg 08-16-17

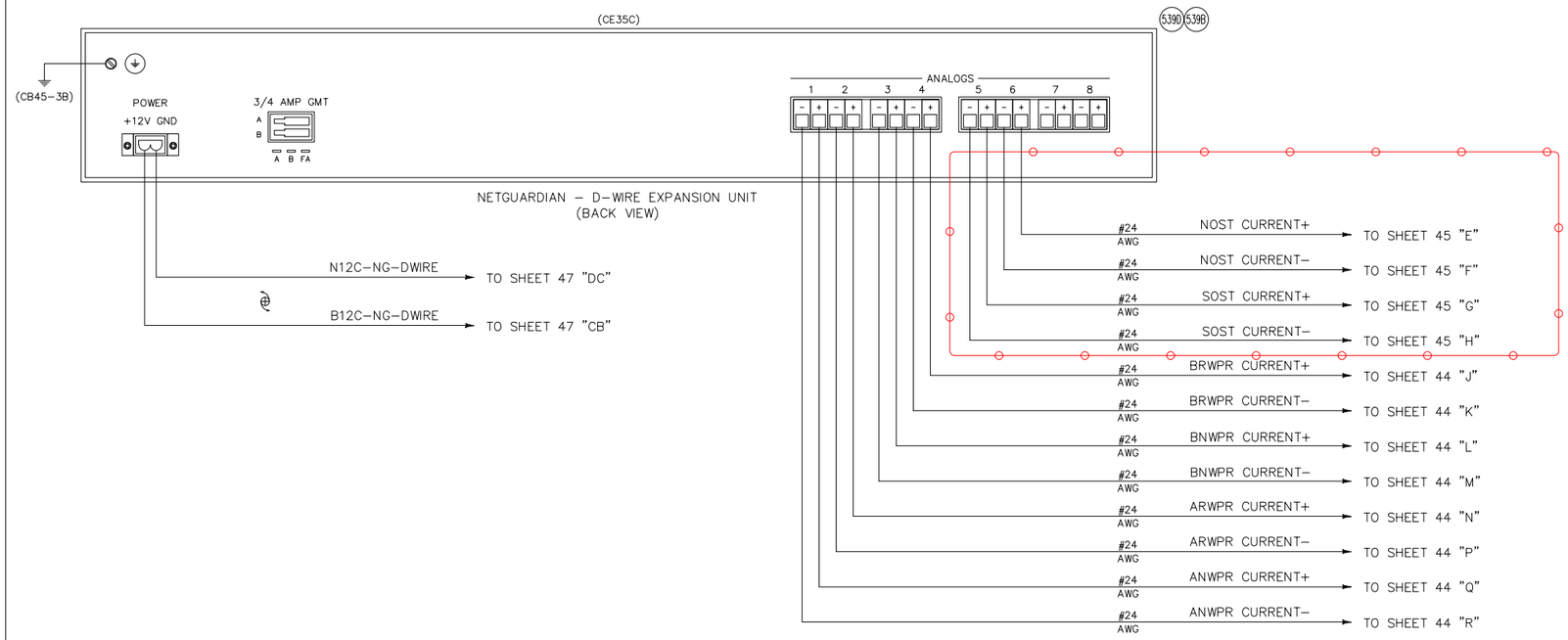

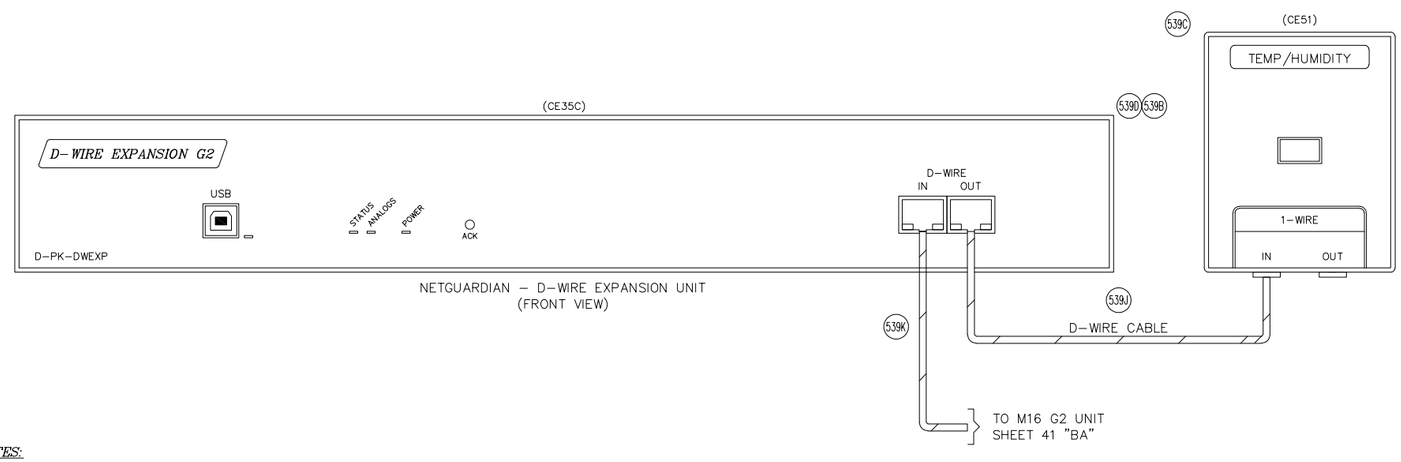

NOTES:

1. ALL WIRING TO BE #16 AWG FLEX TEFZEL UNLESS OTHERWISE NOTED.
2. ALL GROUND WIRES TO BE #6 AWG GREEN FLEX TEFZEL UNLESS OTHERWISE NOTED.

The ALASKA RAILROAD CORPORATION

SIGNAL ENGINEERING — P.O. BOX 107500 , ANCHORAGE , ALASKA 99510-7500

RAINBOW

SSS RAINBOW M.P. 93.06 | NSS RAINBOW M.P. 93.28

MANUAL MONITORED SWITCH

REVISIONS

AS DESIGNED-0.00 08-16-17 OS INSTALLATION PTC SYSTEM DES:BE/WAW CHK:BE/ES	AS IN SERVICE 03-22-17 INSTALL IETMS PTC SYSTEM DES:BE/WAW CHK:BE/ES

DRAWN: *BE*
DATE: 07-25-16

DWG NO. 009306-009328

SHEET 43 OF 58

009328_43.dwg 08-16-17

BURNS ENG. REVISIONS

AS DESIGNED-0.00 PTC OS INSTALLATION

SCALE:	INITIAL	DATE
DESIGNED:	WAW	08-16-17
CHECKED:	ES	08-17-17
BACK-CHECKED:	WAW	08-17-17
CORRECTED:	WAW	08-17-17
VERIFIED:	ES	08-17-17

AS DESIGNED-0.01 PTC OS INSTALLATION

SCALE:	INITIAL	DATE
DESIGNED:	SLF	10-16-17
CHECKED:	WDW	10-16-17
BACK-CHECKED:	SLF	10-16-17
CORRECTED:	SLF	10-16-17
VERIFIED:	WDW	10-16-17

RAINBOW

THE Burns GROUP ENGINEERING AND CONSTRUCTION

SHEET NUMBER REF. 43

DRAWING NUMBER REF. 009306-009328

BURNS PROJECT REF. 2017-159

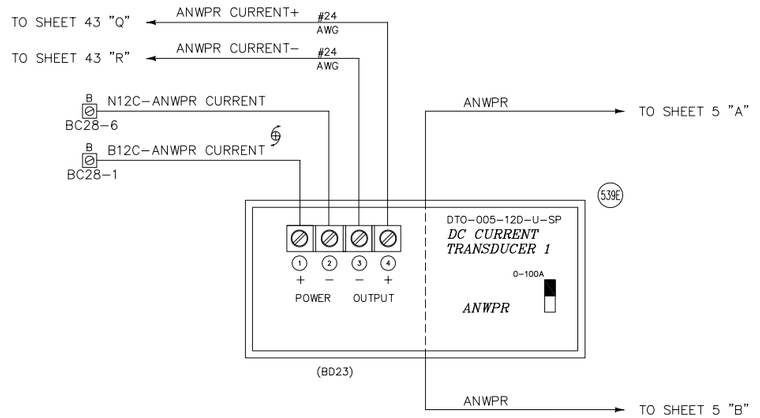

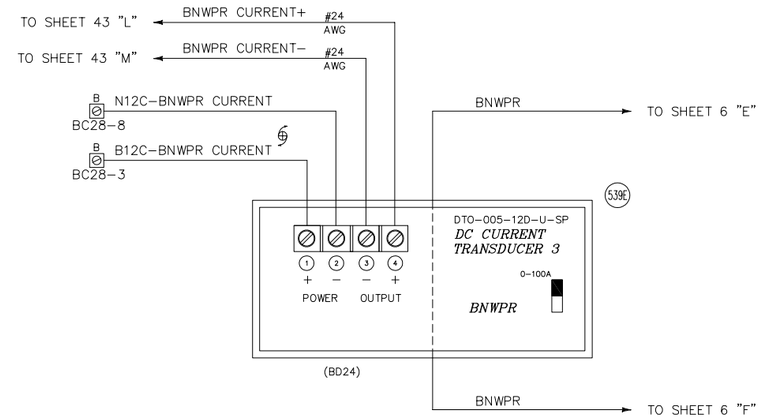

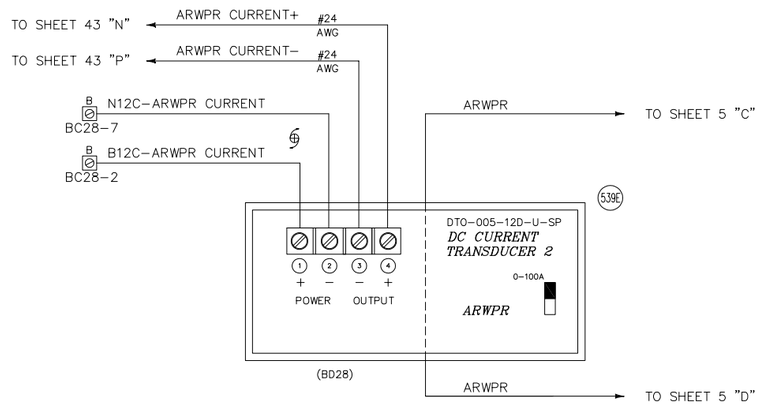

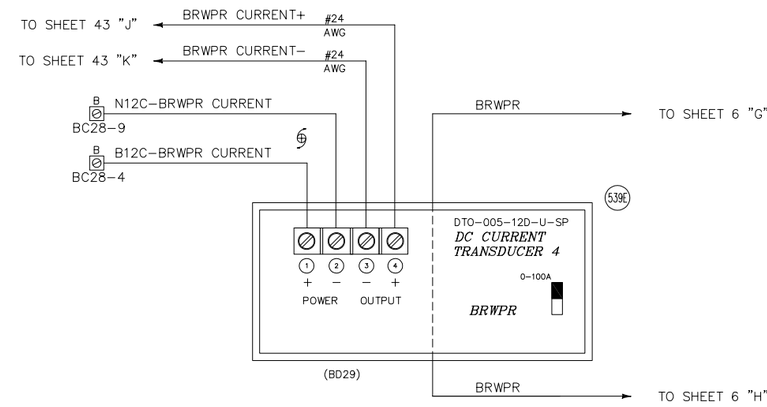

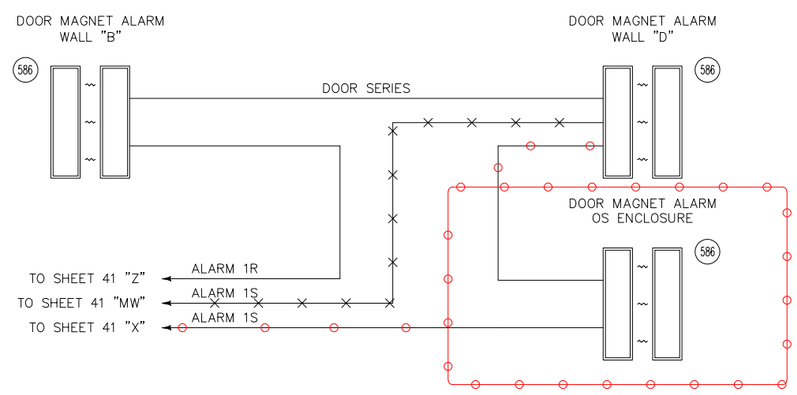

NOTES:

1. ALL WIRING TO BE #16 AWG FLEX TEFZEL UNLESS OTHERWISE NOTED.

REVISIONS

				AS DESIGNED−0.00 08−16−17 OS INSTALLATION PTC SYSTEM DES: BE/WAW CHK: BE/ES	AS IN SERVICE 03−22−17 INSTALL IETMS PTC SYSTEM DES: BE/WAW CHK: BE/ES

The ALASKA RAILROAD CORPORATION

SIGNAL ENGINEERING P.O. BOX 107500 , ANCHORAGE , ALASKA 99510−7500

RAINBOW

SSS RAINBOW M.P. 93.06 | NSS RAINBOW M.P. 93.28

MANUAL MONITORED SWITCH

DRAWN: *BE*
DATE: 07−25−16

DWG NO. 009306−009328

SHEET 44 OF 58

009328_44.dwg 08−16−17

BURNS ENG. REVISIONS

AS DESIGNED−0.00 PTC OS INSTALLATION

SCALE:	INITIAL	DATE
DESIGNED:	WAW	08−16−17
CHECKED:	ES	08−17−17
BACK−CHECKED:	WAW	08−17−17
CORRECTED:	WAW	08−17−17
VERIFIED:	ES	08−17−17

AS DESIGNED−0.01 PTC OS INSTALLATION

SCALE:	INITIAL	DATE
DESIGNED:	SLF	10−16−17
CHECKED:	WDW	10−16−17
BACK−CHECKED:	SLF	10−16−17
CORRECTED:	SLF	10−16−17
VERIFIED:	WDW	10−16−17

RAINBOW

THE Burns GROUP ENGINEERING AND CONSTRUCTION

SHEET NUMBER REF. 44

DRAWING NUMBER REF. 009306−009328

BURNS PROJECT REF. 2017−159

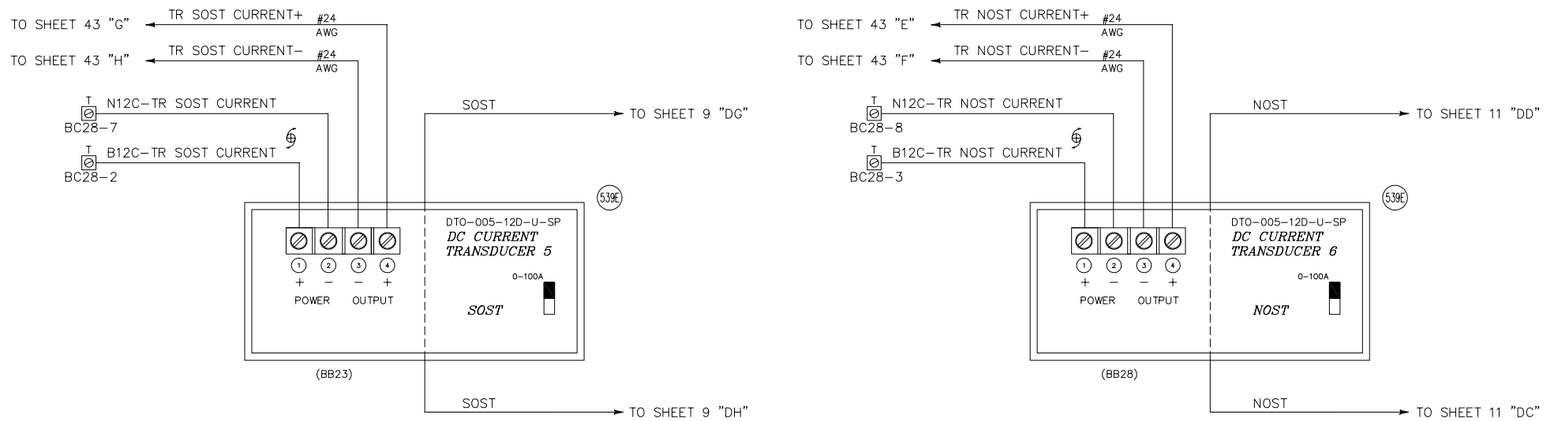

ALL NEW

NOTES:

1. ALL WIRING TO BE #16 AWG FLEX TEFZEL UNLESS OTHERWISE NOTED.

REVISIONS

					AS DESIGNED−0.00 08−16−17 OS INSTALLATION PTC SYSTEM DES: BE/WAW CHK: BE/ES

The ALASKA RAILROAD CORPORATION

SIGNAL ENGINEERING P.O. BOX 107500 , ANCHORAGE , ALASKA 99510−7500

RAINBOW

SSS RAINBOW M.P. 93.06 | NSS RAINBOW M.P. 93.28

MANUAL MONITORED SWITCH

DRAWN: *BE*
DATE: 08−16−17

DWG NO. 009306−009328

SHEET 45 OF 58

009328_45.dwg 08−16−17

BURNS ENG. REVISIONS

AS DESIGNED−0.00 PTC OS INSTALLATION	SCALE:		
		INITIAL	DATE
	DESIGNED:	WAW	08−16−17
	CHECKED:	ES	08−17−17
	BACK−CHECKED:	WAW	08−17−17
	CORRECTED:	WAW	08−17−17
	VERIFIED:	ES	08−17−17

AS DESIGNED−0.01 PTC OS INSTALLATION	SCALE:		
		INITIAL	DATE
	DESIGNED:	SLF	10−16−17
	CHECKED:	WDW	10−16−17
	BACK−CHECKED:	SLF	10−16−17
	CORRECTED:	SLF	10−16−17
	VERIFIED:	WDW	10−16−17

RAINBOW

THE Burns GROUP ENGINEERING AND CONSTRUCTION

SHEET NUMBER REF. 45

DRAWING NUMBER REF. 009306−009328

BURNS PROJECT REF. 2017−159

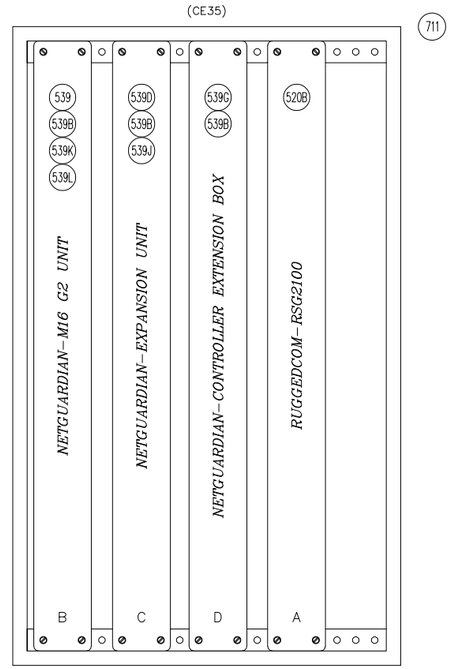

RU6 FLUSH MOUNT WALL RACK
(SIDE VIEW)

REVISIONS

					AS IN SERVICE 03-22-17 INSTALL IETMS PTC SYSTEM DES:BE/WAW CHK:BE/ES

The ALASKA RAILROAD CORPORATION
SIGNAL ENGINEERING P.O. BOX 107500 , ANCHORAGE , ALASKA 99510-7500

RAINBOW

SSS RAINBOW M.P. 93.06 | NSS RAINBOW M.P. 93.28

MANUAL MONITORED SWITCH

DRAWN: *BE*
DATE: 07-25-16

DWG NO. 009306-009328

SHEET 46 OF 58

009328_46.dwg 08-16-17

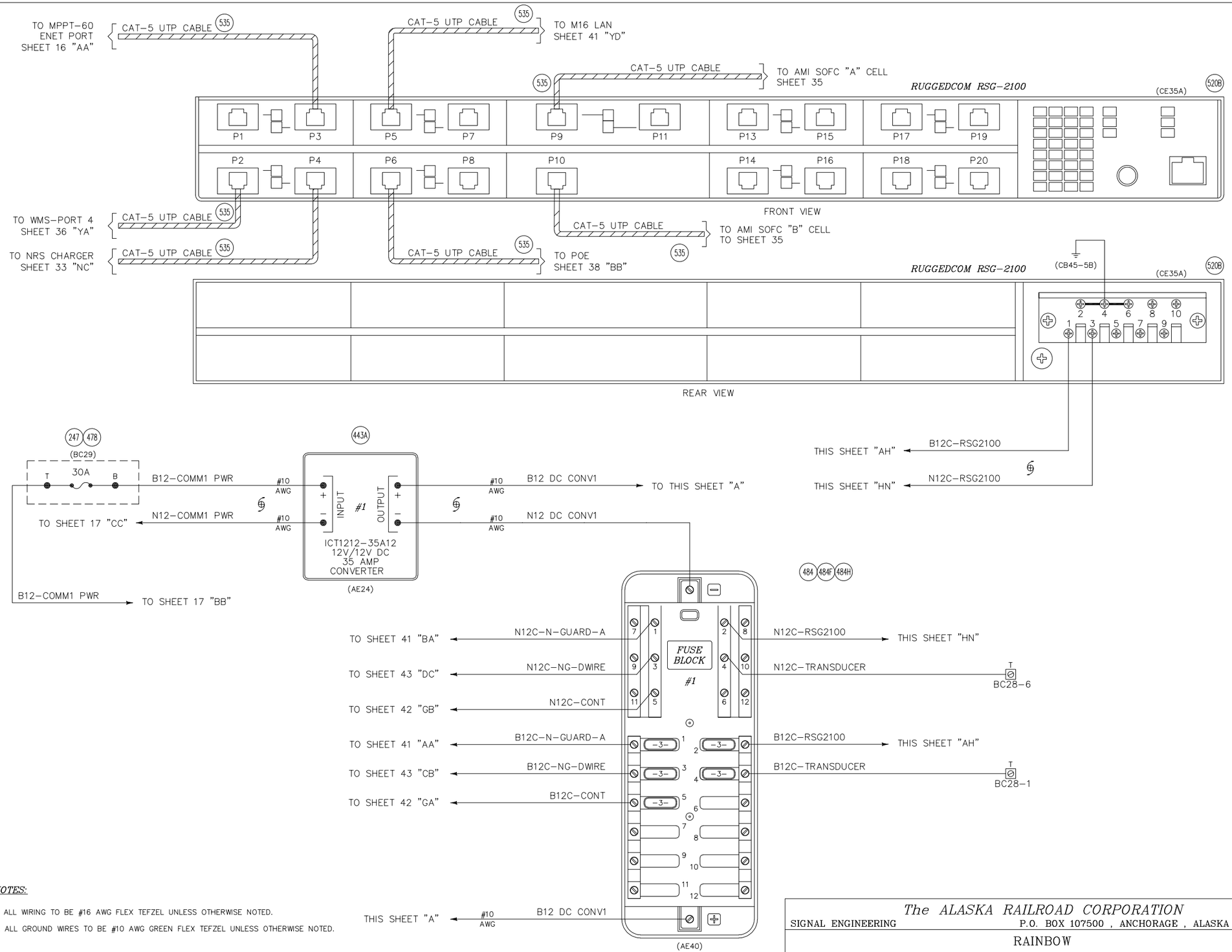

NOTES:

1. ALL WIRING TO BE #16 AWG FLEX TEFZEL UNLESS OTHERWISE NOTED.
2. ALL GROUND WIRES TO BE #10 AWG GREEN FLEX TEFZEL UNLESS OTHERWISE NOTED.

REVISIONS

AS IN SERVICE 03-22-17
INSTALL IETMS
PTC SYSTEM
DES:BE/WAW CHK:BE/ES

The ALASKA RAILROAD CORPORATION
SIGNAL ENGINEERING P.O. BOX 107500 , ANCHORAGE , ALASKA 99510-7500

RAINBOW

SSS RAINBOW M.P. 93.06 | NSS RAINBOW M.P. 93.28

MANUAL MONITORED SWITCH

DRAWN: *BE*
DATE: 07-25-16

DWG NO. 009306-009328

SHEET 47 OF 58

009328_47.dwg 08-16-17

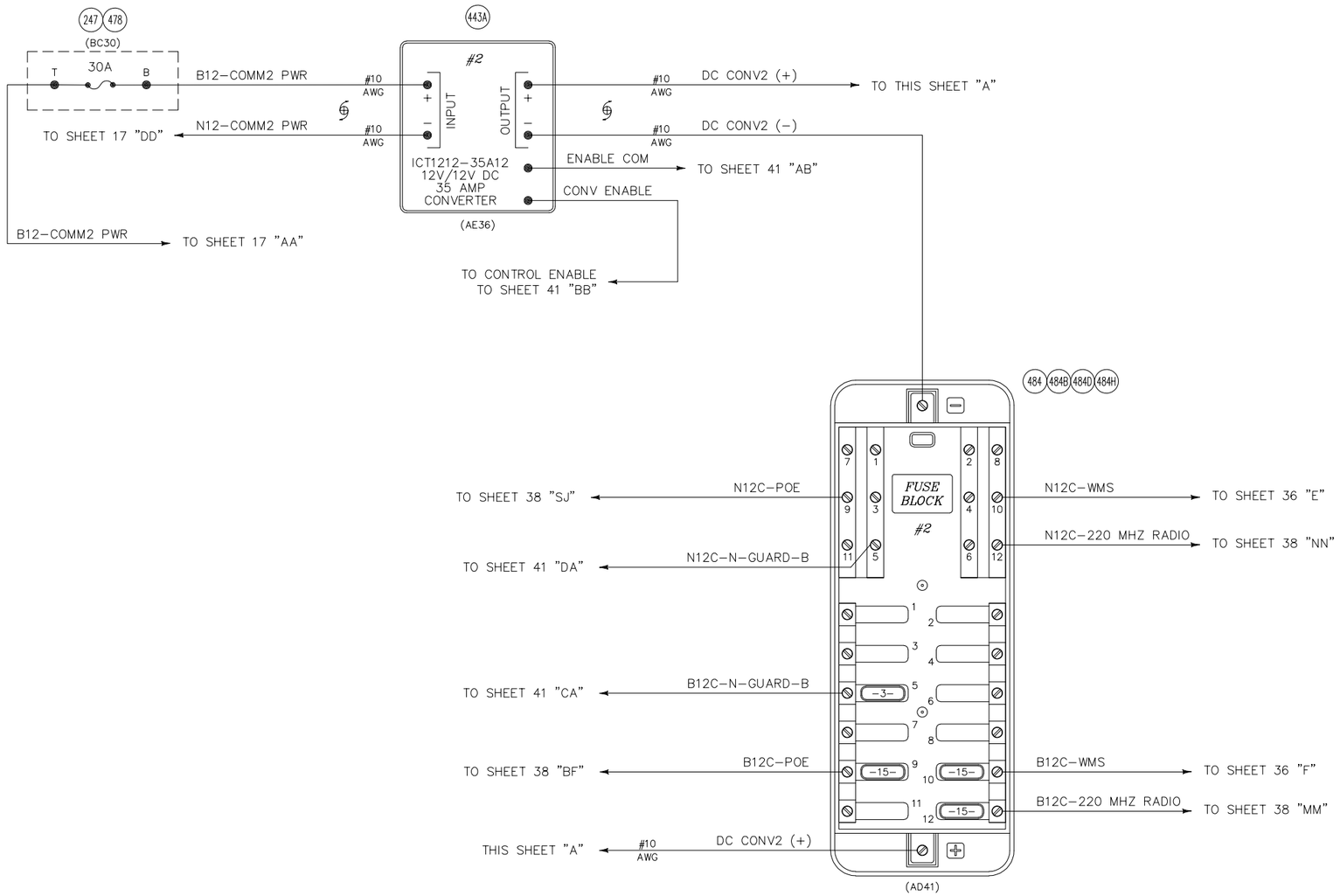

NOTES:

1. ALL WIRING TO BE #16 AWG FLEX TEFZEL UNLESS OTHERWISE NOTED.

REVISIONS

					AS IN SERVICE 03-22-17 INSTALL IETMS PTC SYSTEM DES:BE/WAW CHK:BE/ES

The ALASKA RAILROAD CORPORATION

SIGNAL ENGINEERING P.O. BOX 107500 , ANCHORAGE , ALASKA 99510-7500

RAINBOW

SSS RAINBOW M.P. 93.06 | NSS RAINBOW M.P. 93.28

MANUAL MONITORED SWITCH

DRAWN: *BE*
DATE: 07-25-16

DWG NO. 009306-009328

SHEET 48 OF 58

009328_48.dwg 08-16-17

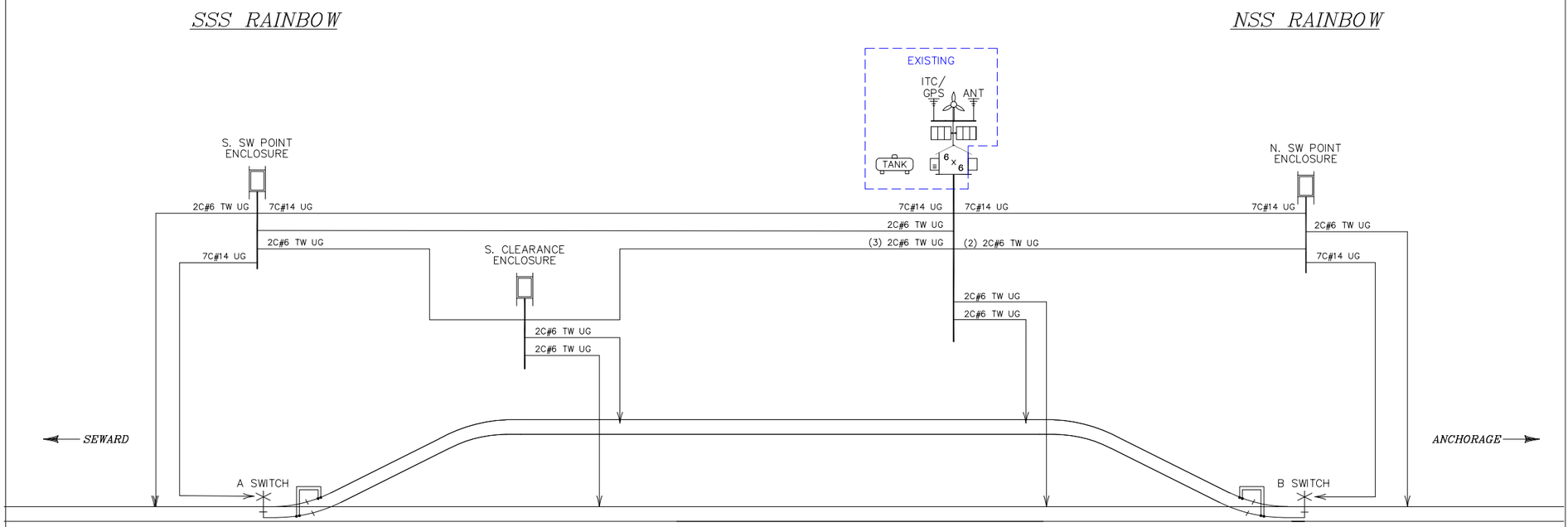

ALL NEW

EXCEPT WHERE NOTED

REVISIONS

				AS DESIGNED–0.00 08–16–17 OS INSTALLATION PTC SYSTEM DES:BE/WAW CHK:BE/ES	AS IN SERVICE 03–22–17 INSTALL IETMS PTC SYSTEM DES:BE/WAW CHK:BE/ES

The ALASKA RAILROAD CORPORATION

SIGNAL ENGINEERING P.O. BOX 107500 , ANCHORAGE , ALASKA 99510–7500

RAINBOW

SSS RAINBOW M.P. 93.06 | NSS RAINBOW M.P. 93.28

MANUAL MONITORED SWITCH

DRAWN: *RLB*
DATE: 05–07–12

DWG NO. 009306–009328

SHEET 50 OF 58

009328_50.dwg 08–16–17

BURNS ENG. REVISIONS

AS DESIGNED–0.00 PTC OS INSTALLATION	SCALE:		
		INITIAL	DATE
	DESIGNED:	WAW	08–16–17
	CHECKED:	ES	08–17–17
	BACK–CHECKED:	WAW	08–17–17
	CORRECTED:	WAW	08–17–17
	VERIFIED:	ES	08–17–17

AS DESIGNED–0.01 PTC OS INSTALLATION	SCALE:		
		INITIAL	DATE
	DESIGNED:	SLF	10–16–17
	CHECKED:	WDW	10–16–17
	BACK–CHECKED:	SLF	10–16–17
	CORRECTED:	SLF	10–16–17
	VERIFIED:	WDW	10–16–17

RAINBOW

THE Burns GROUP
ENGINEERING AND CONSTRUCTION

SHEET NUMBER REF. 50

DRAWING NUMBER REF. 009306–009328

BURNS PROJECT REF. 2017–159

OS INSTALLATION

MAT. REF. NO.	MANUFACTURERS PART NO.	DESCRIPTION	MANUFACTURER	QTY	REMARKS
1	022615-4X	HEAVY DUTY ARRESTOR W/ 3 POST PORCELAIN BASE	SIEMENS	16	
2	022700-1X	HEAVY DUTY EQUALIZER	SIEMENS	20	
8	023612-5X	BAKELITE TERMINAL BLOCK	SIEMENS	24	BLOCK FOR ARRESTORS, RESISTORS & EQUALIZERS
40	A62-262	RELAY - NEUTRAL, 500 OHM, 6FB	ALSTOM	2	ORDER NUMBER 56001-762-02
70	A62-614	RELAY - SLOW RELEASE, 194OHM, 4FB-2F-1B	ALSTOM	2	
156	7000-7A471-0001	PSO 4000 TRANSMITTER	SIEMENS	2	
158	7000-7A473-0001	PSO 4000 RECEIVER	SIEMENS	4	
159	7000-7A418-0001	PSO BATTERY LINE FILTER	SIEMENS	6	
164R	7000-7A355-4000	TUNED RECEIVER COUPLER - 4 KHz	SIEMENS	2	LAST FOUR DIGITS REPRESENT FREQUENCY SELECTED
166Q	7000-7A377-2630	RECEIVER LINE TO RAIL COUPLER - 2.63 KHz	SIEMENS	2	LAST FOUR DIGITS REPRESENT FREQUENCY SELECTED
168	7000-7A388-0001	LINE TO RECIEVER COUPLER	SIEMENS	4	
171Q	7000-7A399-2630	TRANSMITTER LINE TO RAIL COUPLER - 2.63 KHz	SIEMENS	1	LAST FOUR DIGITS REPRESENT FREQUENCY SELECTED
171R	7000-7A399-4000	TRANSMITTER LINE TO RAIL COUPLER - 4.00 KHz	SIEMENS	1	LAST FOUR DIGITS REPRESENT FREQUENCY SELECTED
224	59686-005-04	RELAY - MOUNTING BASE (B1 TYPE)	ALSTOM	4	
231	023390-11X	TERMINAL - UNIVERSAL MODEL 390 (12 POST)	SIEMENS	2	
232	023390-11-6X	TERMINAL - UNIVERSAL MODEL 390 (6 POST)	SIEMENS	4	
241	023839-5	BUSS CONNECTOR - 1"	SIEMENS	3	SPECIFY LENGTH UP TO 36"
244	024620-1X	STRAIGHT INSULATED LINK - 1"	SIEMENS	16	INCLUDES SPECIAL NUT & NUT CLAMP
245	024620-4X	STRAIGHT INSULATED LINK - 2 3/8"	SIEMENS	24	INCLUDES SPECIAL NUT & NUT CLAMP
497A	VIO-08-00-00	ELECTROBLOX VITAL INTERFACE UNIT (8 INPUT)	GETS	1	
539E	D-PK-SENSR-12140	NETGUARDIAN - SOLID CORE CURRENT SENSOR - 12VDC	DPS TELECOM	2	
584		GROUND PLATE		4	
586	1135W	MAGNETIC DOOR ALARM	SENTROL	1	
651	286-896	SWITCH - 1 POLE MOMENTARY	WAGO	2	
652	280-616	TERMINAL BLOCK - 2 CONDUCTOR CARRIER	WAGO	2	
655	801733	DIN RAIL - NS 35-15 PERF 2000MM	PHOENIX CONTACT	2	
657	3044102	TERMINAL BLOCK - SCREW TYPE UT 4	PHOENIX CONTACT	40	
665	800886	TERMINAL BLOCK END CLAMP - E/NS 35N	PHOENIX CONTACT	4	
666	3047167	TERMINAL BLOCK PARTITION PLATE - ATP UT	PHOENIX CONTACT	7	
668	3030271	TERMINAL BRIDGE - 10 POSITION (FBS 10-6)	PHOENIX CONTACT	4	
680	825011	TERMINAL BLOCK MARKING (END CLAMP)	PHOENIX CONTACT	4	
682	824992	TERMINAL BLOCK MARKING (UT 4)	PHOENIX CONTACT	4	
719		NEMA 3R CASE - 48" X 36" X 16"		4	

ALL NEW

REVISIONS

					AS DESIGNED-0.00 08-16-17 OS INSTALLATION PTC SYSTEM DES:BE/WAW CHK:BE/ES

The ALASKA RAILROAD CORPORATION
SIGNAL ENGINEERING P.O. BOX 107500 , ANCHORAGE , ALASKA 99510-7500

RAINBOW

SSS RAINBOW M.P. 93.06 | NSS RAINBOW M.P. 93.28

MANUAL MONITORED SWITCH

DRAWN: *BE*
DATE: 08-16-17

DWG NO. 009306-009328

SHEET 51 OF 58

009328_51.dwg 08-16-17

BURNS ENG.

REVISIONS

AS DESIGNED-0.00 PTC OS INSTALLATION

SCALE:	INITIAL	DATE
DESIGNED:	WAW	08-16-17
CHECKED:	ES	08-17-17
BACK-CHECKED:	WAW	08-17-17
CORRECTED:	WAW	08-17-17
VERIFIED:	ES	08-17-17

AS DESIGNED-0.01 PTC OS INSTALLATION

SCALE:	INITIAL	DATE
DESIGNED:	SLF	10-16-17
CHECKED:	WDW	10-16-17
BACK-CHECKED:	SLF	10-16-17
CORRECTED:	SLF	10-16-17
VERIFIED:	WDW	10-16-17

RAINBOW

THE Burns GROUP ENGINEERING AND CONSTRUCTION

SHEET NUMBER REF. 51

DRAWING NUMBER REF. 009306-009328

BURNS PROJECT REF. 2017-159

MAT. REF. NO.	MANUFACTURERS PART NO.	DESCRIPTION	MANUFACTURER	QTY	REMARKS
2	022700-1X	HD EQUALIZER	SIEMENS	1	OR APPROVED EQUAL
3	022485-31X	CLEARVIEW ARRESTOR W/ BAKELITE BASE	SIEMENS	2	OR APPROVED EQUAL
7	A62-125	"RELAY - BIASED NEUTRAL, 500 OHM, 6FB"	ALSTOM	4	ORDER NUMBER 56001-922-07
224	59686-005-04	RELAY - MOUNTING BASE (B1 TYPE)	ALSTOM	4	
232	023390-11-6X	TERM. - UNIVERSAL MODEL 390 (6 POST)	SIEMENS	4	OR APPROVED EQUAL
240	023839-2	"BUSS CONNECTOR - 1""	SIEMENS	31	OR APPROVED EQUAL
241	023839-5	"BUSS CONNECTOR - 1"" (ORDER TO LENGTH)"	SIEMENS	4	OR APPROVED EQUAL
243	23836	"BUSS CONNECTOR - 2 3/8""	SIEMENS	1	OR APPROVED EQUAL
247	027614-1X	FUSE BLOCK - BAKELITE MODEL 614	SIEMENS	3	OR APPROVED EQUAL
303A	RSI-534	SURGE PROTECTOR (ACSP-20)	RSI	4	
352	53530-030-01	MODEL 7J SWITCH CIRCUIT CONTROLLER	ALSTOM	2	
423	4KS 25PS	BATTERY - 1350 A.H. @ 20HR	ROLLS SURRETE	6	PROVIDED BY AKRR
427		BATTERY TRAY		2	
434	ERB-C 12/40	ERB-C BATTERY CHARGER	NRS	1	
439	1675-12-12-15	DC/DC CONVERTER 12 VOLT INPUT 15 A	WILMORE ELECTRONICS	1	
458	DS50PVS-500	SURE PROTECTOR - PV APPLICATION	CITEL	1	
461	309863	SURGE ARRESTOR ASSEMBLY - BSA6	TESSCO	1	
466	AHE-12X12X6	HOFFMAN ENCLOSURE	HOFFMAN	1	CLEAR COVER PREFERRED
468	EPD120/240T	SURGE PROTECTOR - AC PRIMARY	ERICO	1	
474	FRN-R-10	FUSE - 10 AMP	BUSSMAN	1	
475	FRN-R-1	FUSE - 1 AMP	BUSSMAN	1	
476	FRN-R-15	FUSE - 15 AMP	BUSSMAN	1	
495	WIU-02-00-00	ELECTROBLOX WAYSIDE INTERFACE UNIT (2 INPUT)	GETS	1	
497	VIO-04-00-00	ELECTROBLOX VITAL INTERFACE UNIT (4-INPUT)	GETS	1	
499	IMG-2	ELECTROBLOX WAYSIDE MESSAGE SERVER	GETS	1	
500		ITC 220 MHZ RADIO W/ INDEGRATED GPS	MCC	1	
509	TSX-NFM	LIGHTNING ARRESTOR (IN-LINE)	POLYPHASER	2	
513	ANT-220-F2	ANTENNA - ITC RADIO	TELEWAVE	1	
513A	12111120G	ANTENNA - GPS: SSA-5/B-HEAD TNC & MARINE ADAPTER	SYNERGY SYSTEMS	1	
534		RJ-11 CABLE		2	OR APPROVED EQUAL
535	C5011040XX	CAT-5 UTP CABLE	BELDEN	1	
550	HIT POWER 220A	SOLAR PANEL - 220W	SANYO	6	
552	AIR30	WIND TURBINE	SOUTHEAST WINDPOWER	1	
553A		WIND TURBINE STALL SWITCH	RSI	1	
554	HL-100	AIR HEATING DIVERSION LOAD	TESSCO	1	
556	RP500P-B12-CW	SOLID OXIDE FUEL CELL GENERATOR	ACUMENTRICS	1	
556E		SOFC FIELD STAND	ACUMENTRICS	1	
559	TRISTAR-60	CHARGE CONTROLLER - WIND TURBINE	MORNINGSTAR	1	
561	TS-MPPT-60	CHARGE CONTROLLER	MORNINGSTAR	1	
562	TS-M-2	CHRAGE CONTROLLER REMOTE METER	MORNINGSTAR	1	
563	L6-15R	NEMA L6-15 RECEPTACLE		4	SUPPLIED WITH BUNGALOW
564	L14-30	NEMA L14-30 FLANGED PLUG		1	SUPPLIED WITH BUNGALOW
566		METER HUB	MORNINGSTAR	1	
575	Q0120L125G	HOUSE BREAKER BOX	SQ D/ SCHNEIDER	1	
588	Q0115	CIRCUIT BREAKER - 15 AMP	SQ D/ SCHNEIDER	2	
589	Q0220	CIRCUIT BREAKER - 20 AMP DOUBLE POLE	SQ D/ SCHNEIDER	1	
590	Q0215	CIRCUIT BREAKER - 15 AMP DOUBLE POLE	SQ D/ SCHNEIDER	1	
591	Q0230	CIRCUIT BREAKER - 30 AMP	SQ D/ SCHNEIDER	1	
599	5036-0	RAYNTITE WEATHERPROOF PLUG COVER	HUBBELL	1	
600		HOUSE JUNCTION BOX - S1 (4X4)		1	

REVISIONS

AS IN SERVICE 03-22-17
INSTALL IETMS
PTC SYSTEM
DES:BE/WAW CHK:BE/ES

The ALASKA RAILROAD CORPORATION
SIGNAL ENGINEERING P.O. BOX 107500 , ANCHORAGE , ALASKA 99510-7500

RAINBOW

SSS RAINBOW M.P, 93.06 | NSS RAINBOW M.P. 93.28

MANUAL MONITORED SWITCH

DRAWN: *RLB*
DATE: 05-07-12

DWG NO. 009306-009328

52 SHEET OF 58

009328_52.dwg 08-16-17

MAT. REF. NO.	MANUFACTURERS PART NO.	DESCRIPTION	MANUFACTURER	QTY	REMARKS
601	369642	WIRE DUCT	TESSCO	1	
603		HOUSE VENT FAN THERMOSTAT (DC)		1	
605		HOUSE VENT FAN (DC)		1	
608		HOUSE LIGHT SNAP SWITCH		1	
615	WLF-CW60SMD	HOUSE LED LIGHTS	SUPERBRIGHTLEDS	1	
640A	3118203	FUSE BLOCK TERMINAL	PHOENIX CONTACT	1	
640B	913760	30A BLADE FUSE	PHOENIX	1	
655	801733	DIN RAIL - NS 35-15 PERF 2000MM	PHOENIX	2	
657	3044102	TERMINAL BLOCK - SCREW TYPE UT 4	PHOENIX	18	
659	285-134	TERMINAL BLOCK - 2 COND. B. 8-2 AWG (BLUE)	WAGO	4	
660	285-135	TERMINAL BLOCK - 2 COND. B. 8-2 AWG (GRAY)	WAGO	8	
661	285-137	TERMINAL BLOCK - 2 COND. B. 8-2 AWG (GRN/YEL)	WAGO	2	
666	3047167	TERMINAL BLK PARTITION - ATP UT	PHOENIX	2	OR APPROVED EQUAL
669	3030365	TERMINAL BRIDGE - 20 POSITION (FBS 20-6)	PHOENIX CONTACT	2	
667	285-337	TERMINAL BLOCK END PLATE	WAGO	12	
676	285-435	TERMINAL BLOCK JUMPER	WAGO	3	
680	825011	TERMINAL BLOCK MARKING (END CLAMP)	PHOENIX	18	OR APPROVED EQUAL
685	1213 D M U 280	DIN RAIL MOUNTED CB - 80A	CBI ELECTRIC	1	
686	Q113 D M U 245	DIN RAIL MOUNTED CB - 45A	CBI ELECTRIC	1	
727A	RSI_SWH_002	BUNGALOW - 6'X6' SOLAR/WIND	RSI	1	
735		SOFC ENCLOSURE (FIBERGLASS)	ACUMENTRICS	1	OR APPROVED EQUAL

REVISIONS

AS IN SERVICE 03-22-17
INSTALL IETMS
PTC SYSTEM
DES:BE/WAW CHK:BE/ES

The ALASKA RAILROAD CORPORATION
SIGNAL ENGINEERING P.O. BOX 107500 , ANCHORAGE , ALASKA 99510-7500

RAINBOW

SSS RAINBOW M.P. 93.06 | NSS RAINBOW M.P. 93.28

MANUAL MONITORED SWITCH

DRAWN: *RLB*
DATE: 05-07-12

DWG NO. 009306-009328

SHEET 53 OF 58

009328_53.dwg 08-16-17

PTC BILL OF MATERIALS

MAT. REF. NO.	MANUFACTURERS PART NO.	DESCRIPTION	MANUFACTURER	QTY	REMARKS
2	022700-1X	HEAVY DUTY EQUALIZER	SIEMENS	1	
3	022485-31X	CLEARVIEW ARRESTOR W/ BAKELITE BASE	SIEMENS	2	
232	023390-11-6X	TERMINAL - UNIVERSAL MODEL 390 (6 POST)	SIEMENS	4	
241	023839-5	BUSS CONNECTOR - 1"	SIEMENS	2	
243	23836	BUSS CONNECTOR - 2 3/8"	SIEMENS	2	
244	024620-1X	STRAIGHT INSULATED LINK - 1"	SIEMENS	10	INCLUDES SPECIAL NUT & NUT CLAMP
247	027614-1X	FUSE BLOCK - BAKELITE MODEL 614	SIEMENS	1	
376	N17067602	MICROLOK CPU W/ PTC WIU	ANSALDO STS	1	
414A	KPL735	BATTERY - NiCAD	QUALMEGA	0	
423	4KS-25PS	BATTERY - 1350 A.H. @20HR	ROLLS SURRETTE	0	
429E		BATTERY CHARGER- 80A , HF-MAX 12V, 100-240 VAC	NRS	1	
443A	ICT1212-35A12	DC/DC 12V CONVERTER	ICT	2	
478	FRN-R-30	FUSE - 30 AMP	BUSSMAN	2	
484	5026	ST BLADE FUSE BLOCK - 12 CIRCUITS	BLUE SEA SYSTEMS	1	
484A	5237	ATO-ATC BLADE FUSE - 3 AMP	BLUE SEA SYSTEMS	0	
484B	5239	ATO-ATC BLADE FUSE - 5 AMP	BLUE SEA SYSTEMS	0	
484C	5241	ATO-ATC BLADE FUSE - 10 AMP	BLUE SEA SYSTEMS	0	
484D	5242	ATO-ATC BLADE FUSE - 15 AMP	BLUE SEA SYSTEMS	0	
484F	5235	ATO-ATC BALDE FUSE - 1 AMP	BLUE SEA SYSTEMS	1	
484G	5240	ATO-ATC BALDE FUSE - 7.5 AMP	BLUE SEA SYSTEMS	0	
484H	5236	ATO-ATC BALDE FUSE - 2 AMP	BLUE SEA SYSTEMS	5	
499	IMG-2	ELECTROBLOX WAYSIDE MESSAGE SERVER	GETS	0	
500	63010000-05	ITC 220 MHZ RADIO W/ INDEGRATED GPS	METEORCOMM	0	
500B		CISCO 1941 ROUTER	CISCO	0	
500D	RS400-24PTXTX-3D	RS400 SWITCH	RUGGEDCOM	0	
500G	PV375	TRIPP-LITE PWR INVERTER	TRIPP-LITE	0	
500J	TP-DC-DC-1248	DC/DC CONVERTER	TYCON	0	
500M	ILINX232	RS232 CONVERTER	B&B ELECTRONICS	0	
509A	IS-50NX-C2	LIGHTNING ARRESTOR (IN-LINE)	POLYPHASER	0	
509C	859902WPS	LIGHTNING ARRESTOR (IN-LINE)	POLYPHASER	0	
509D	DGXZ+15TFTF-BN	LIGHTNING ARRESTOR (IN-LINE)	POLYPHASER	0	
509E	IS-75F-C1	LIGHTNING ARRESTOR (IN-LINE)	POLYPHASER	1	
509H		COMMS COAX - LMR-195	TIMES MICROWAVE	3	
509J		COMMS COAX - LMR-195 (50 OHM)		2	
509K		COMMS COAX - LMR-400	TIMES MICROWAVE	1	
509M	LMR-600	COMMS COAX	TIMES MICROWAVE	0	
512C	IR809G-LTE-NA-K9	CISCO 809 CELL RADIO	CISCO	0	
513	ANT-220-F2	ANTENNA - ITC RADIO	TELEWAVE	0	
513A	12111120G	ANTENNA - GPS: SSA-5/B-HEAD TNC & MARINE ADAPTER	SYNERGY SYSTEMS	0	
513C	FG821/18503	ANTENNA - DUAL BAND FIBERGLASS OMNI-DIRECTIONAL	LAIRD	0	
513D	FM2SP	ANTENNA - MOUNT BRACKET	LAIRD	0	
520B	RSG2100	RUGGEDCOM-RSG2100	RUGGEDCOM	1	P/N: RSG2100-F-RD-24-XX-TX01-TX01-TX01-TX01-CG01-1CG01-TX01-TX01-TX01-TX01-XX
535	C5011040XX	CAT-5 UTP CABLE	BELDEN	7	
535A		RS232 CABLE		4	

REVISIONS

					AS IN SERVICE 03-22-17 INSTALL IETMS PTC SYSTEM DES:BE/WAW CHK:BE/ES

The ALASKA RAILROAD CORPORATION

SIGNAL ENGINEERING P.O. BOX 107500 , ANCHORAGE , ALASKA 99510-7500

RAINBOW

SSS RAINBOW M.P. 93.06 | NSS RAINBOW M.P. 93.28

MANUAL MONITORED SWITCH

DRAWN: *BE*
DATE: 07-25-16

DWG NO. 009306-009328

SHEET 56 OF 58

009328_56.dwg 08-16-17

PTC BILL OF MATERIALS

MAT. REF. NO.	MANUFACTURERS PART NO.	DESCRIPTION	MANUFACTURER	QTY	REMARKS
539	D-PK-M16G2-12033	NETGUARDIAN - M16 G2 UNIT	DPS TELECOM	1	
539A	D-PK-16PAN-12002.0001	NETGUARDIAN - WALL MOUNT PLUGGABLE PANEL - 216 LINE	DPS TELECOM	1	
539B	D-CS-532-10A-05	NETGUARDIAN - MOUNTING EARS	DPS TELECOM	3	
539C	D-PK-DSNSR-12002.00004	"NETGUARDIAN - DPS SENSOR NODE, TEMP & HUMIDITY"	DPS TELECOM	1	
539D	D-PK-DWEXP-12006.00001	"NETGUARDIAN - DWIRE EXPANSION UNIT, SINGLE 12VDC"	DPS TELECOM	1	
539E	D-PK-SENSR-12140	NETGUARDIAN - SOLID CORE CURRENT SENSOR - 12VDC	DPS TELECOM	4	
539G	D-PK-CTLEX-12001.0001	12V NETGUARDIAN CONTROLLER EXTENSION BOX	DPS TELECOM	1	
539H	D-PR-962-10B-03	50 PIN MALE AMPHENOL TO MALE AMPHENOL	DPS TELECOM	1	
539J	D-PR-910-10A-07	"RJ11 CAT5 CABLE, INCLUDED WITH DWIRE EXPANSION UNIT"	DPS TELECOM	1	
539K	D-PK-910-10A-6I	"RJ11 TO RJ11 CA CAT5 CABLE, 6""	DPS TELECOM	1	
539L	D-PR-957-10A-50	50 FOOT MALE AMPHENOL TO OPEN END CABLE	DPS TELECOM	1	
542	SRCIP-CS-ODU-UHF-F	RURAL CONNECT GENERATION II CPR TVWS RADIO	CARLSON	0	
543	057-470-786-13-F	ANTENNA WITH F TYPE CONNECTOR AND 50' RG-6 CABLE	CARSLON	0	
580	GK-SUNV	GROUNDING KIT - LMR195	COMMSCOPE	1	
582	GK-S400TT	GROUNDING KIT - LMR400	COMMSCOPE	1	
584A	GB-HKU	UNIVERSAL GROUND BAR KIT	ANDREW	1	
584B	GB-0210.01	COPPER GROUND BUSS BAR	ANDREW	1	
586	1135W	MAGNETIC DOOR ALARM	SENTROL	2	
595	TGBIT14212G2T	TIN GROUND BAR	HARGER	1	
596	GK-S600TT	GROUNDING KIT - LMR600	COMMSCOPE	1	
655	801733	DIN RAIL - NS 35-15 PERF 2000MM	PHOENIX CONTACT	1	
657	3044102	TERMINAL BLOCK - SCREW TYPE UT 4	PHOENIX CONTACT	10	
665	800886	TERMINAL BLOCK END CLAMP - E/NS 35N	PHOENIX CONTACT	2	
666	3047167	TERMINAL BLOCK PARTITION PLATE - ATP UT	PHOENIX CONTACT	3	
678	3030349	TERMINAL BRIDGE - 5 POSITION (FBS 5-6)	PHOENIX CONTACT	2	
680	825011	TERMINAL BLOCK MARKING (END CLAMP)	PHOENIX CONTACT	2	
682	824992	TERMINAL BLOCK MARKING (UT 4)	PHOENIX CONTACT	1	
711	11754-X19	6U X 19 WALL BRACKET	CHATSWORTH PRODUCTS	1	

REVISIONS

					AS IN SERVICE 03-22-17 INSTALL IETMS PTC SYSTEM DES:BE/WAW CHK:BE/ES

The ALASKA RAILROAD CORPORATION
SIGNAL ENGINEERING P.O. BOX 107500 , ANCHORAGE , ALASKA 99510-7500

RAINBOW

SSS RAINBOW M.P. 93.06 | NSS RAINBOW M.P. 93.28

MANUAL MONITORED SWITCH

DRAWN: BE
DATE: 07-25-16

DWG NO. 009306-009328

009328_57.dwg 08-16-17