PROPRIETARY INFORMATION
THIS DOCUMENT CONTAINS PROPRIETARY INFORMATION AND IS SUBMITTED UPON THE EXPRESS CONDITION THAT THE INFORMATION CONTAINED HEREIN WILL NOT BE USED DIRECTLY OR INDIRECTLY IN ANY WAY DETRIMENTAL TO THE INTERESTS OF LO-REZ VIBRATION CONTROL LTD.

5/8" ϕ SHOULDER × 1/2" NC THREAD BOLTS
TIGHTENING TORQUE IS 80 LB-FT

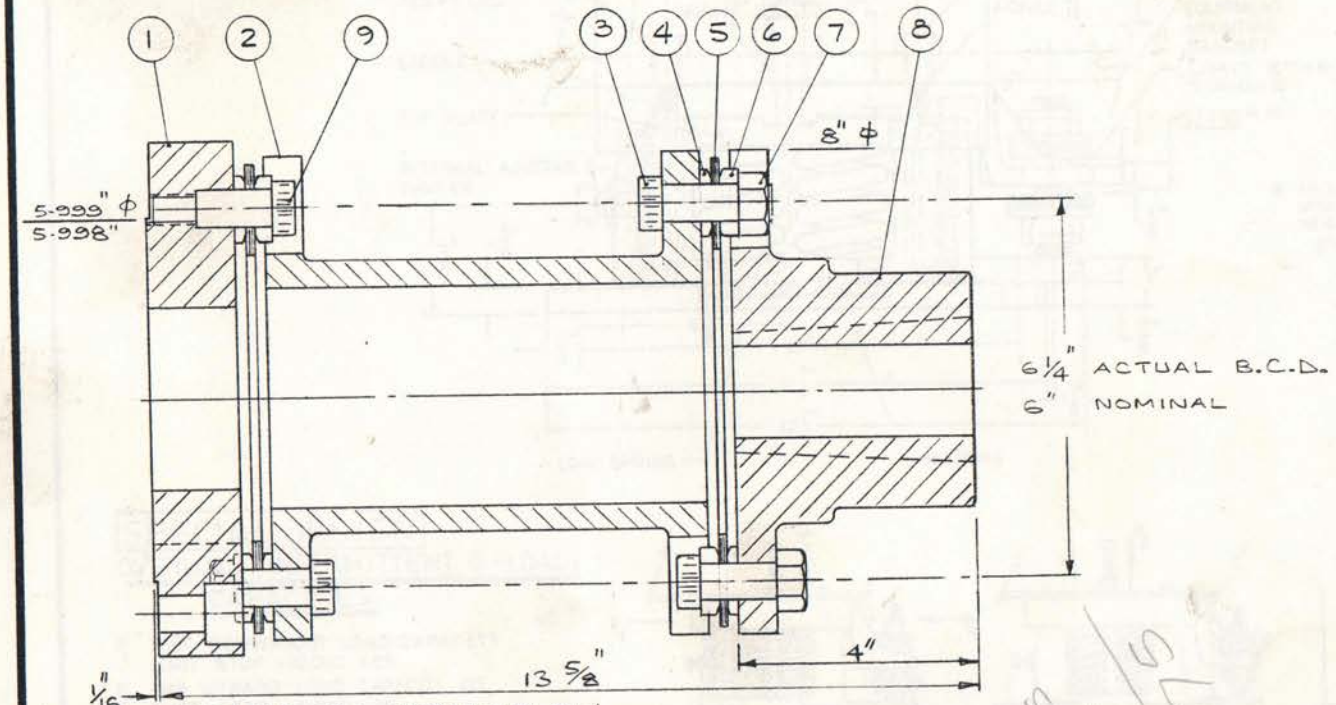

HLF ASSEMBLY LUBRICATION

1) LUBRICATE SHANK WITH LIGHT MACHINE OIL
2) LUBRICATE OUTER SURFACES OF WASHER WITH DOW-CORNING MOLY-KOTE G-N PASTE (DO NOT LUBRICATE BEVEL-FACE)
3) LUBRICATE THREADS WITH MOLY-KOTE G-N PASTE

ITEM No.	PART No.	DESCRIPTION	QTY.	REMARKS
9	HLF-0602-02	6 HLF SHOULDER BOLT	4	5/8 x 1" SHOULDER GR.8
8	HLF-0607-01A	6 HLF SHAFT HUB	1	DURA BAR
7	HLF-0606-01	6 HLF NUT	12	1/2 NC FIBER-LOCK
6	HLF-0605-02A	6 HLF BEVEL SPACER WASHER	16	4340 BAR
5	HLF-0603-01	6 HLF LAMINATION	2	S.S 301 8PCS/PACK
4	HLF-0605-01A	6 HLF BEVEL WASHER	16	4340 BAR
3	HLF-0602-01	6 HLF SHOULDER BOLT	12	5/8 x 1.25" SHOULDER GR. 8
2	HLF-0601-02A	6 HLF SPOOL SPACER	1	DURA BAR
1	HLF-0601-01A	DE/6 HLF ADAPTOR	1	DURA BAR

BILL OF MATERIALS

REV.	DESCRIPTION	DATE	BY
B	MORE NOTES ADDED	14/09/89	J.L.
A	REVISE PARTS LIST	08/08/89	RAH

REVISIONS

CUSTOMER	ALLIED SHIPBLDRS.
CUST. JOB #	
CUST. P.O. #	250-505
PROJECT	HULL 250
LO-REZ JOB #	C7003

EXCEPT AS NOTED TOLERANCES ARE
FRACTIONAL ±
DECIMAL ±
ANGULAR ±

LO-REZ VIBRATION CONTROL LTD.
VANCOUVER CANADA

6 HLF COUPLING
GENERAL ASSEMBLY

SCALE	DATE	BY	APPROVED
—	11/07/89	TMV	

DWG. No. HLF-0600-01 Rev. B

BP-49128