LO-REZ VIBRATION CONTROL LTD.

156 WEST 8TH AVENUE, VANCOUVER, B.C. CANADA V5Y 1N2
TEL. (604) 879-2974 FAX (604) 879-6588

RECEIVED
FISHERIES AND OCEANS
JUL 3 - 1991
INSTITUTE OF OCEAN SCIENCES
SIDNEY, B.C.
FILE:

June 28, 1991

Institute of Ocean Sciences,
P.O. Box 6000,
9860 West Saanich Road,
Sidney, B.C. V8L 4B2

Attention: Mr. R.W. Parkinson,
Regional Marine Supt.,
Engineering.

Reference: M/V "R.B. Young"

Gentlemen:

We were pleased to be of service to your Institute last month in connection with the Lo-Rez flexible couplings and related matters.

As you know, we really "threw ourselves" into this situation and brought along a small contingent of forces to assist your good selves in restoring the ship's serviceability.

As a consequence of all this, I am afraid we have incurred considerable costs, as shown on our Invoice 11845. But we trust that you will find these charges to be reasonable.

All of the technical time which several of us applied to the analysis and study of the problem, plus the preparation of the June 27/91 report, has been done without charge to the Institute.

We believe it is highly significant that the port side coupling did not develop any problem.

...cont. Page 2

Attention: Mr. R.W. Parkinson
Regional Marine Supt., Engineering

Since we had such a good opportunity to carefully check over the systems and their alignments, and since we partially rebuilt the DE/HF spring couplings and supplied new laminations for the HLF couplings, we are prepared now to extend a 12-month warranty on system parts, as of May 24/91.

We would like to thank you, Mr. MacQuarrie and Mr. McCutcheon for splendid co-operation and assistance.

Yours very truly,

T.W. Spaetgens, P.Eng.
President.

encl: (2) Reports
(1) Photo

TWS/rhg

LO-REZ VIBRATION CONTROL LTD.

June 27, 1991

"R.B. YOUNG" SURVEY SHIP
OCEAN SCIENCES
DE/HLF COUPLING ALIGNMENT
(JOB NO. C7003)
REFERENCE DRAWINGS
I-405C, FC-0159HF-37

After a failure of the starboard side HLF coupling laminations on May 16, 1991, it was decided that the alignment of the engine to gearbox should be checked. Vijay Chand and Gerald Klassen of LO-REZ visited the ship on Wednesday, May 22, 1991 and found that the starboard engine was out of alignment with the centre line of the gearbox by .120 inches (radial) when dialed from gearbox hub to flywheel spigot as shown in Figure 1. For this test, the dial indicator was mounted on and turned with the gearbox hub.

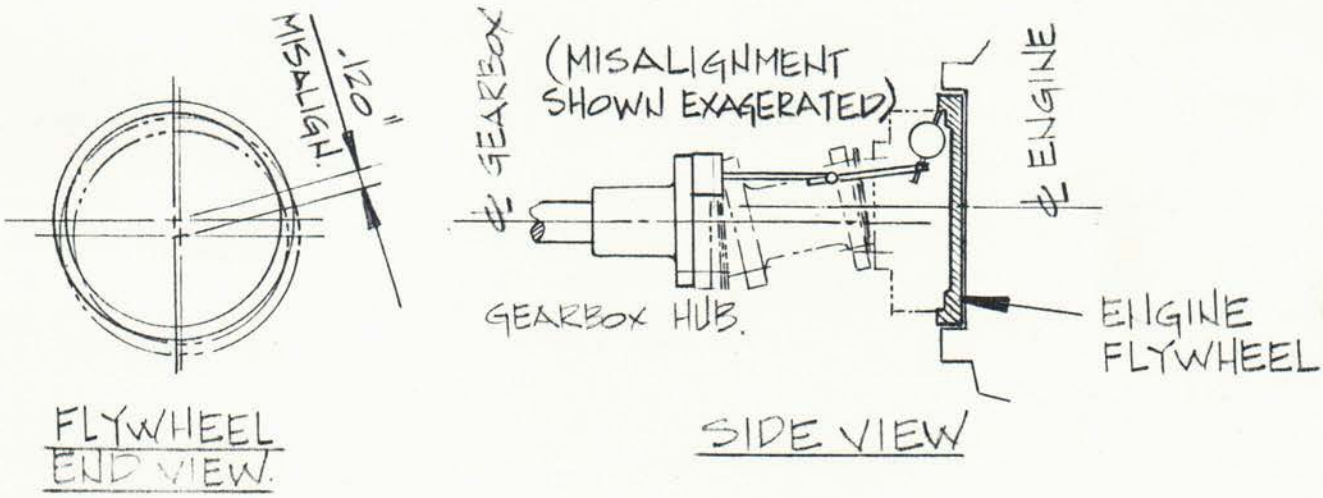

Figure 1

The port side engine was dialled up similarly, and was found to be out of alignment with the centre line of the gearbox by .020 inches. No lamination failure occured on this coupling.

The couplings were removed and brought back to LO-REZ for inspection. The bushings in the starboard side 'DE' coupling were worn (the inside diameters were .010" oversize), so they were replaced. Also one of the thrust washer was cracked at the spring pinhole. The port coupling bushings were also replaced, although the wear was much less. The engines were re-aligned by Finning Power Systems while the couplings were being overhauled at Lo-Rez on May 23. After the alignment was done, four men from LO-REZ were sent out to the R.B. Young to re-install the re-conditioned couplings and to double-check the alignment.

On May 24, we (Jimmy Lee, M.A.Sc. P.Eng., Richard Hordyk, Gerald Kassen and me, Mike Herbert, B.A.Sc. EIT), took the 7 a.m. ferry to Swartz Bay, and arrived in Sidney shortly after 9 a.m. We were met at the R.B. Young by the ship's engineer, John McCutcheon. After lowering the couplings in through the hatch door, we began our inspection of engine alignment. John McCutcheon informed us that he tightened up the isolator limit stops after Finning had re-aligned the engine.

The port side was checked by Jim and Mike while the starboard side was checked mainly by Richard and Gerald. Mr. John McCutcheon assisted significantly in the days efforts. Before taking any measurements of the alignment, the limit stops & damper adjusting screws were loosened off. Readings of the alignment were taken on the flywheel as shown in Figure 1. The dial indicator readings for the port side are shown in Figure 2 and for the starboard side in Figure 3.

The 'DE' couplings were then installed using new GR.5 capscrews on the flange. These capscrews were torqued to 100 ft.lbs. The axial & radial alignment was checked at 4 equivalent spaced locations on the coupling flange face. The set-up used is shown in Figure 4.

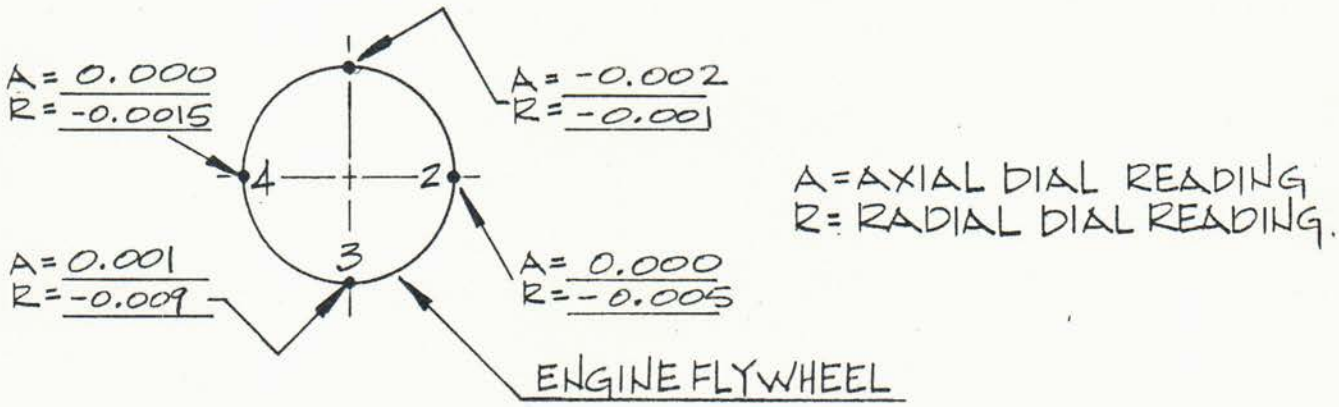

Figure 2

PORT SIDE FLYWHEEL ALIGNMENT

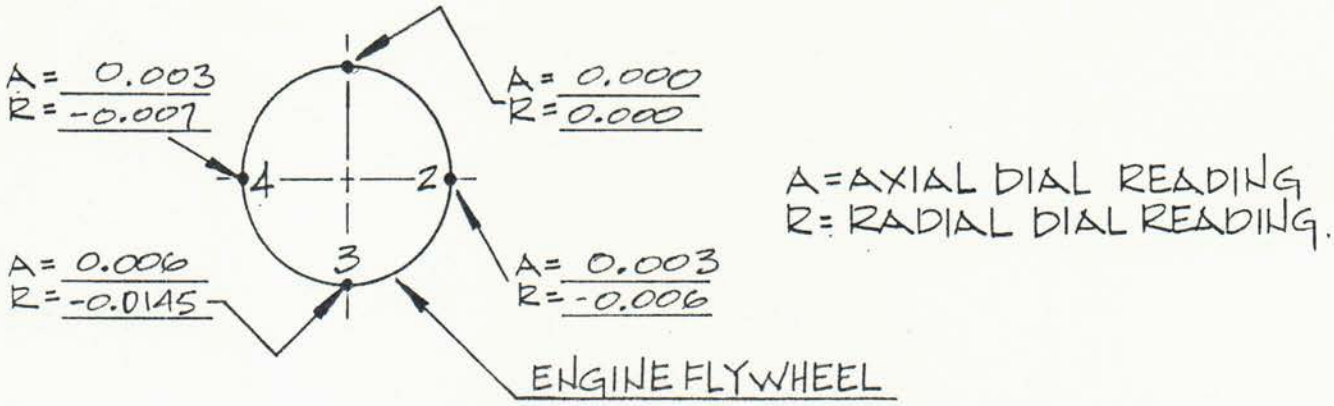

Figure 3

STARBOARD SIDE FLYWHEEL ALIGNMENT

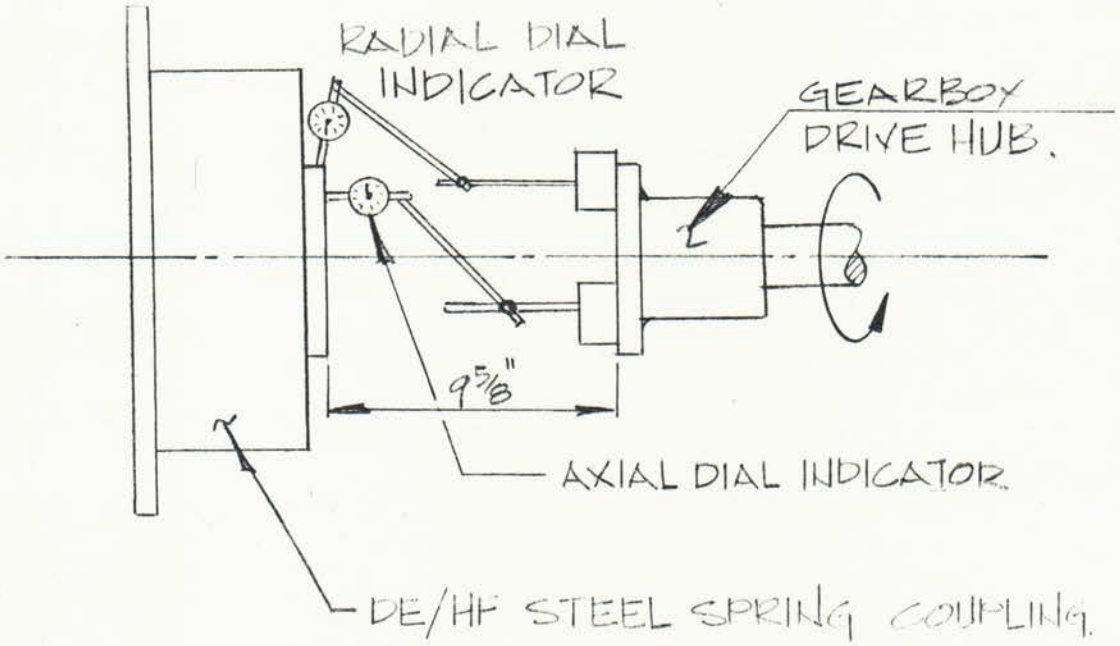

Figure 4

PORT

After the DE/HF coupling was re-installed the port engine was found to be out of alignment as shown in Figure 5.

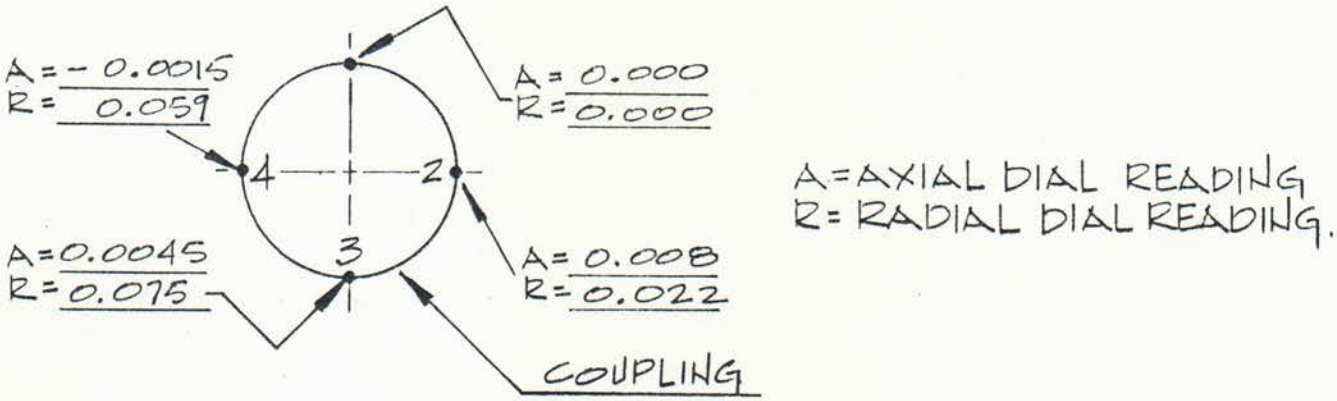

Figure 5

Obviously the engine, and gear were out of alignment, so the back of the engine was lifted by turning the isolator top adjusting bolt 1/3 turn clock wise. After starting the engine to make sure everything was settled, the alignment was checked again and found to be as shown Figure 6, which was considered to be adequate.

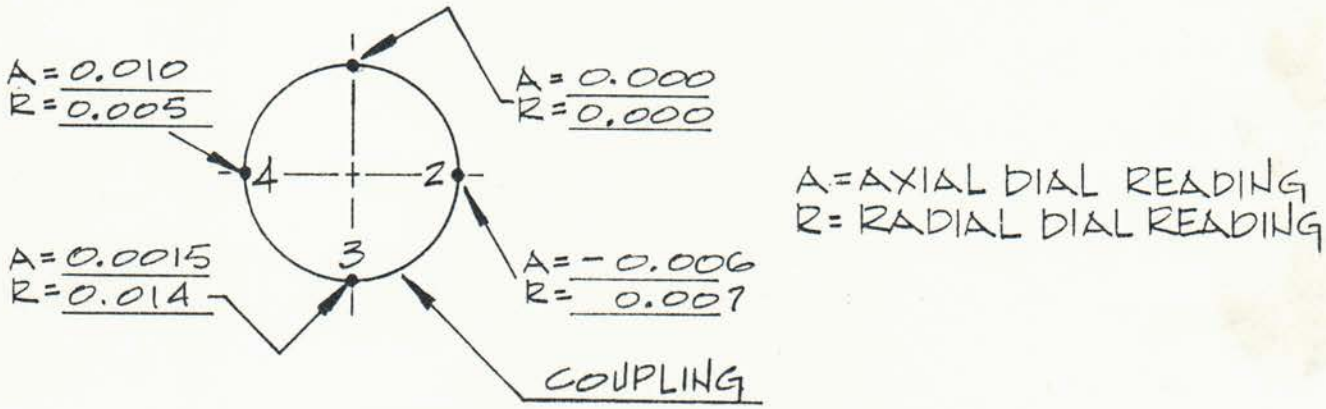

Figure 6

The axial distance between the coupling and drive hub was checked and was found to be approximately 9.605" (.020 inches shorter than 9 5/8" specified on Dwg. No. FC-0159HF-37 Rev.D). The spool spacer and laminations were then bolted in place. The HLF 1/2NC nuts were torqued to 80 ft.lbs.

The port side engine was then run with the coupling system completely assembled. The coupling, spool shaft and laminations appeared to run true without any noticeable flutter.

STARBOARD

The alignment on the starboard engine was first checked by reading the radial and axial run out of the flywheel from the gearbox drive flange, as per Figure 1.

The readings were as shown below.

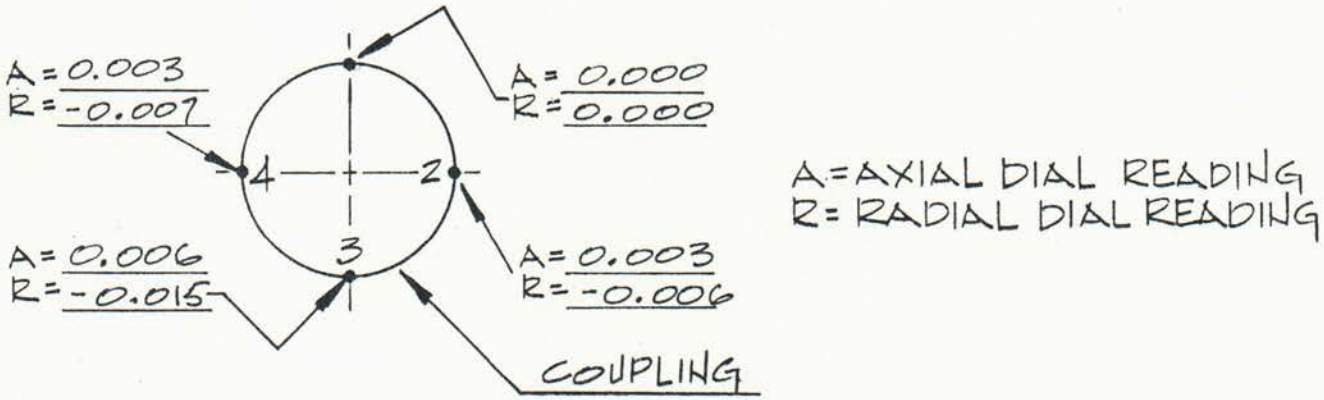

Figure 7

Then the 'DE' coupling was attached and a readout was taken between the gear box hub and the coupling face. The set-up is shown in Figure 2. The engine was .090" lower after the coupling was attached. We then lifted the back end of the engine .090" by turning the rear isolators top adjusting bolt one turn clockwise. The runout after lifting the engine is shown below.

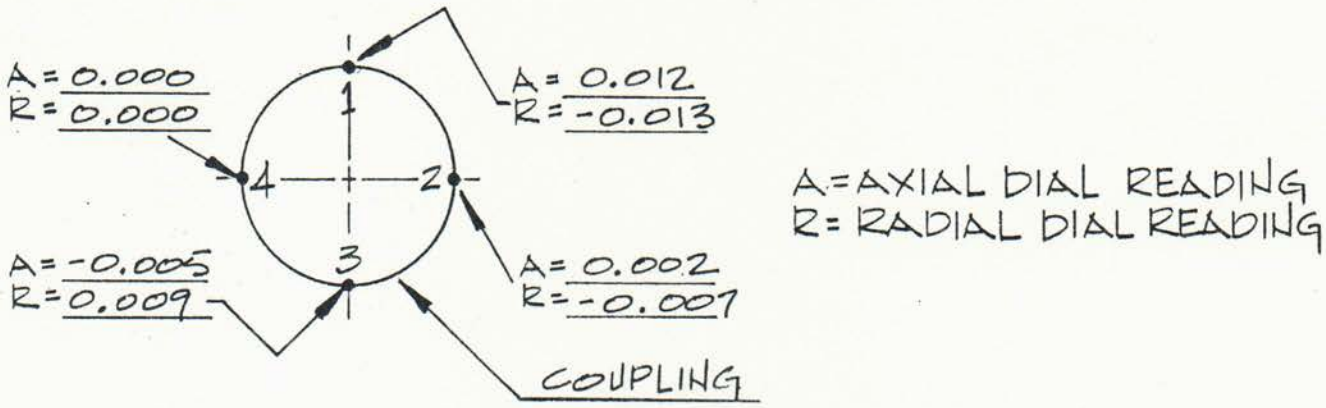

Figure 8

The starboard engine was then found to be approximately 1/8" too far aft and was winched forward after the fasteners at the top of the isolators and the engine mounts were loosened off.

The final alignment readings are shown below.

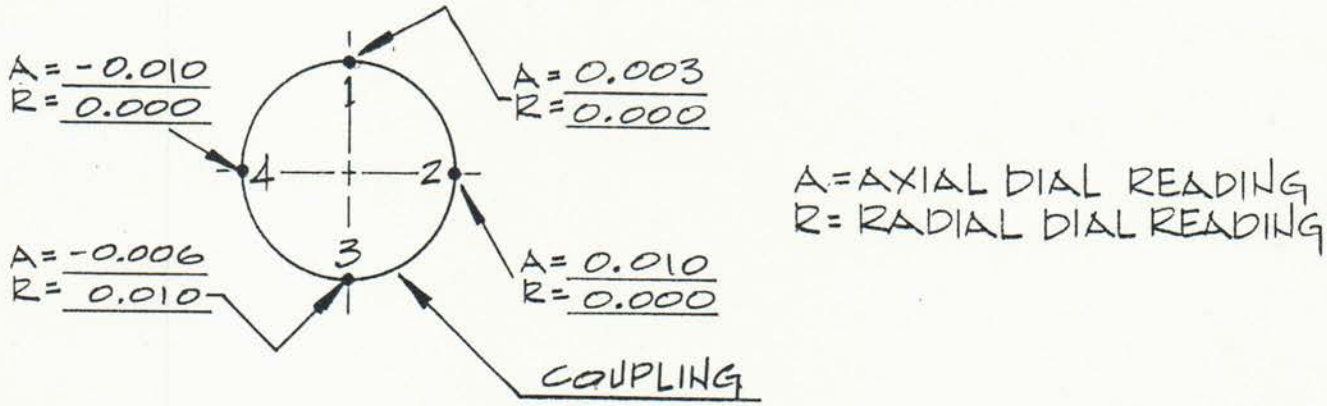

Figure 9

After pulling the starboard engine forward, the distance between the coupling flange and the gearbox drive flange was found to be approximately 9.605" which compares with 9 5/8 shown in Dwg. FC-0159HF-37E, also Figure 4.

The spool spacer and laminations were then bolted in place. The HLF 1/2"NC nuts were torqued to 80 ft.lbs. The starboard engine was then run with the coupling completely assembled. The coupling, spool shaft and laminations appeared to run true without any noticeable flutter.

At 7:15 p.m., the ship was taken out for a trial run to make sure the couplings were o.k. and to set the isolators. During the trial run which lasted approximately 1 hour, the engines were run at speeds mainly at full power and full pitch.

The couplings appeared to run true at high speed, though the port side 'DE' coupling had a slight wobble in the cover which was noticeable under 500 rpm.

Half of the isolator limit stop bumpers were set while the engines were shut down and the other half were set at full power with a gap of approximately .020/.015".

A magnet-base dial gauge was placed on the engine foundation approximately 12" above the aft isolators to measure lateral movement of the engine. A maximum engine displacement of .012" was measured from idle to full load.

We were off the R.B. Young around 8:30 p.m. and caught the 9 p.m. ferry home.

BY.....: Mike Herbert
M.J. Herbert, E.I.T.

APPROVED: T.W. Spaetgens
T.W. Spaetgens, P.Eng.