DATE: 6 MARCH 2015 PROJ. NO. A-14-33

BY

GRAND MARINE LTD.
(GML)

FOR

VANCOUVER SHIPYARDS
(VSY)

REGARDING

"KESTREL / EX-RB YOUNG"

DOCKING REPORT

"AS DOCKED"

REPORT #0039

REVISION 3.4

1116 East 3RD Street, North Vancouver, B.C. Canada, V7J 1B8

Phone. +1 604-987-1117, Fax +1 604-983-3670, Email Info@grandmarine.com www.grandmarine.com

DOCKING REPORT OF "KESTREL"

1 This report has been prepared to respond to VSY docking feasibility study of the vessel "Kestrel" (Official Ship Number: 811822).

2 PURPOSE OF THIS REPORT

2.1 To provide a docking report for the vessel Kestrel.

2.2 To provide a transportation report for the vessel Kestrel.

3 FINDINGS

3.1 All structural calculations were completed with a 5% contingency for the weight as per Noble Denton Guidelines, and a 0.1g to account for dynamic loads.

3.2 An axle line is defined as 2 axles or 4 tires.

DOCKING / FLOAT – ON OPERATION

3.3 The vessel shall be docked using 2 X six-frame ship cradles. The two ship cradles shall be connected together prior to float on. The two ship cradles are spaced 12' 0", between Cradle Frame 6 and Frame 7.

3.4 The vessel will be docked with the bow pointing north.

3.5 This vessel will be lifted by a 2 x 16 Axle Line SPMT arrangement.

3.6 The vessel is expected to **weight 274 LT**, as measured from a previous docking.

3.7 The vessel **Drafts** are expected to be **Forward 1.8 m and Aft 2.4 m**

3.8 The **Overhangs Forward 23' 11" and Aft 9' 10"**.

3.9 It is also noted that this vessel has a sea chest and a bow thruster (indicated in the center-line arrangement drawing).

3.10 Therefore, the center line supports have been placed such that there will be no interference. This should be verified prior to docking.

3.11 The SPMT & Syncrolift loads are acceptable.

3.12 The vessel does not have any protrusions on the bottom; hence, the bilge blocks can be positioned have way down to start, and then slide them up into final positioned.

4 CONCLUSION

4.1 The vessel “Kestrel” can be docked with acceptable safety margins on the SPMT's and the Syncrolift.

5 RECOMMENDATIONS

5.1 It is strongly recommended that any hull bottom protrusions be documented so the prior to undocking.

5.2 The vessel will be docked as light as possible in practice and it shall be docked with a level trim and heel.

5.3 All tanks shall be as empty as possible to minimize load and free surface effect.

6 AS DOCKED 19 JANUARY 2015

6.1 The “Kestrel” was successfully docked on 19 January 2015 (7:30 am to 11:15am). This Docking Report was updated to “As Fitted”.

6.2 The vessel **Weight** was **310 LT**, as measured on Syncrolift.

6.3 The vessel **Drafts** were **Forward 1.7 m and Aft 2.6 m**

6.4 The vessel **Overhangs** were **Forward 23' 11” and Aft 9' 10”**.

6.5 The vessel **Air Draft** was 73' 6” from ground level (top of rail tracks).

6.6 The Paint Repair Facility **SoC60 Height** to Top of Upper Door (rubber) is **74' 10”**

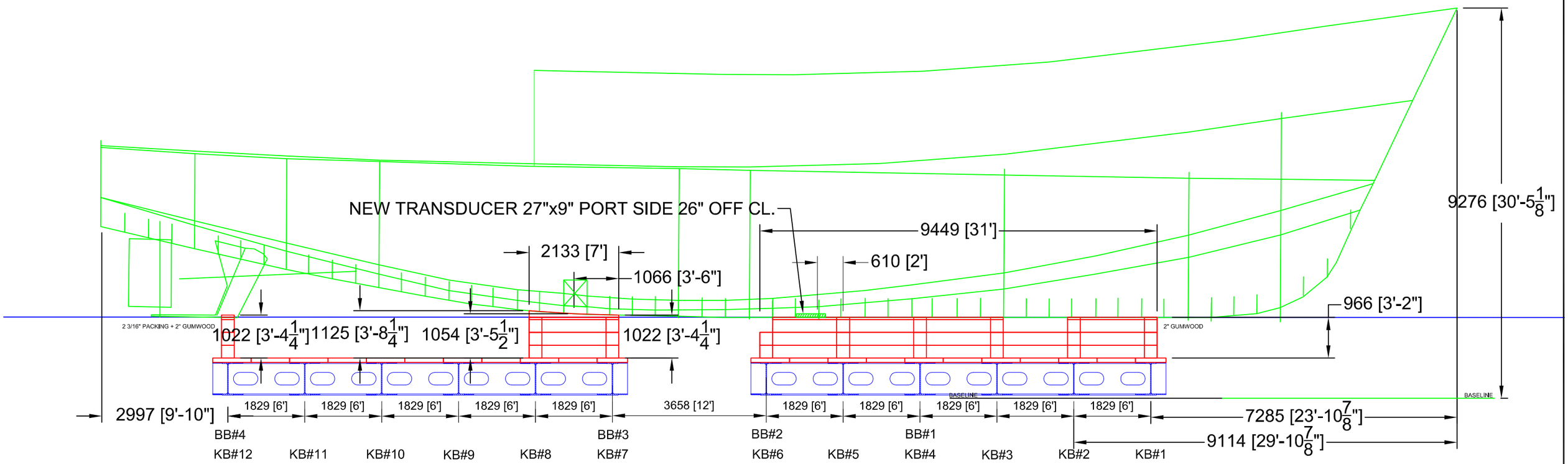

NOTES:
EXACT DIMENSIONS ARE IN MILLIMETERS
DIMENSIONS IN FEET AND INCHES ARE APPROXIMATE.
85MT SWL PER TRANSVERSE FRAME

ELEVATION

REV	DATE	DESCRIPTION	DWN BY	CHK	APP
3.4	5 MAR 2015	NEW TRANSDUCER	AMS	AS	AMS
3.2	13 JAN 2015	SEACHESTS & TRANSDUCERS	AMS	AS	AMS
3.0	07 JAN 2015	DOCKING BLOCKS	AMS	AS	AMS

CLIENT: VSY

PROJECT: KESTREL (EX. R.B. YOUNG)

TITLE: BLOCKING ARRANGEMENT
KEEL BLOCKS ELEVATION

GRAND MARINE LTD

www.grandmarine.com info@grandmarine.com

PROJECT No.	DOCKING	SCALE	DWG. NO:	SHT. NO.	REV.
A-14-33	0039	.	A-14-33-01	1 OF 1	3.4

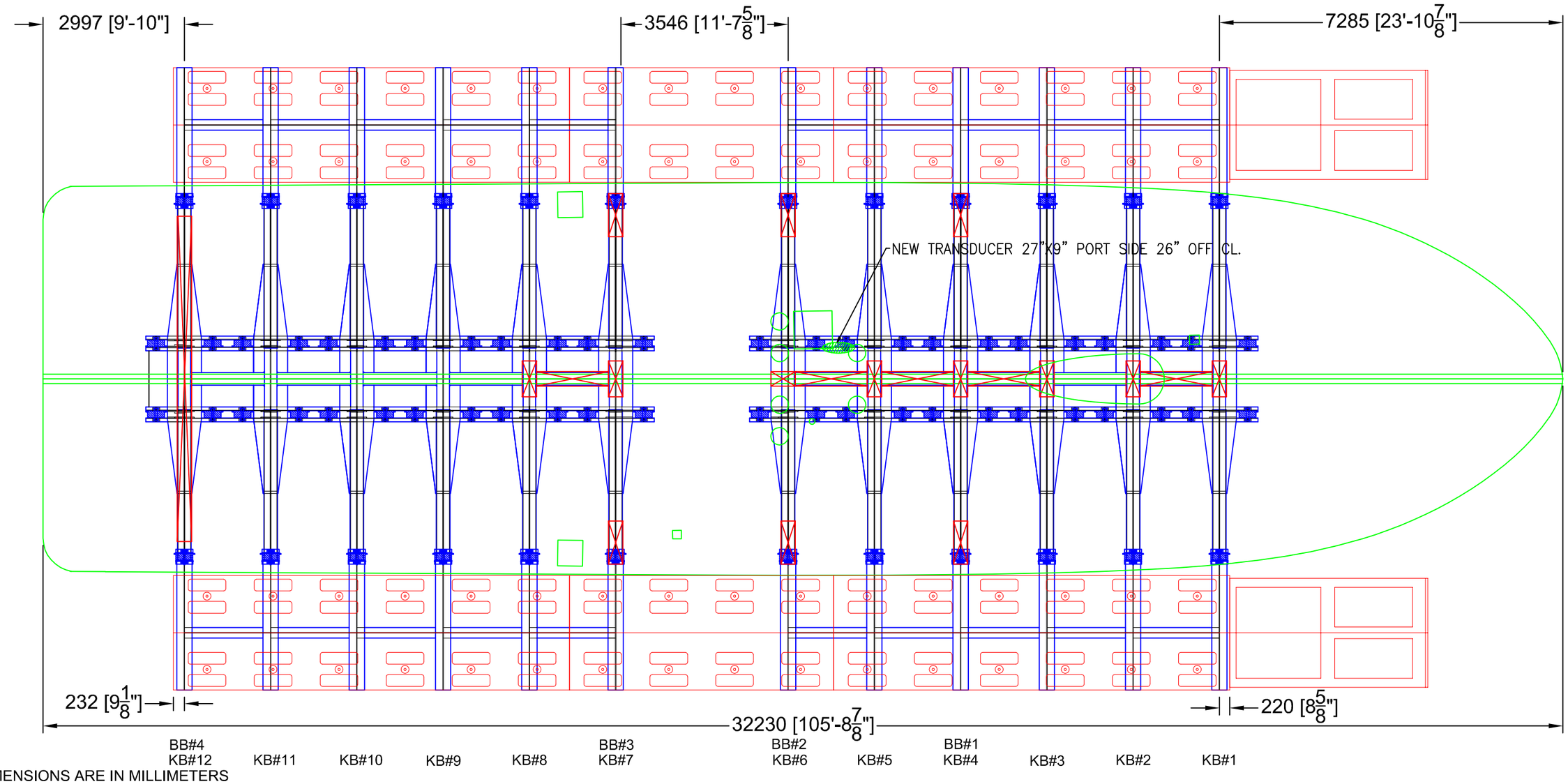

NOTES:
EXACT DIMENSIONS ARE IN MILLIMETERS
DIMENSIONS IN FEET AND INCHES ARE APPROXIMATE.
85MT SWL PER TRANSVERSE FRAME

PLAN

REV	DATE	DESCRIPTION	DWN BY	CHK	APP
3.4	5 MAR 2015	FWD CENTER LINE TRANSDUCER	AMS	AS	AMS
3.2	13 JAN 2015	SEACHESTS & TRANSDUCERS	AMS	AS	AMS
3.0	07 JAN 2015	DOCKING BLOCKS	AMS	AS	AMS

CLIENT: VSY

PROJECT: KESTREL (EX. R.B. YOUNG)

TITLE: BLOCKING ARRANGEMENT
SHIP CRADLE & SPMT'S PLAN

GRAND MARINE LTD

www.grandmarine.com info@grandmarine.com

PROJECT No.	DOCKING	SCALE	DWG. NO:	SHT. NO.	REV.
A-14-33	0039	.	A-14-33-02	1 OF 1	3.4

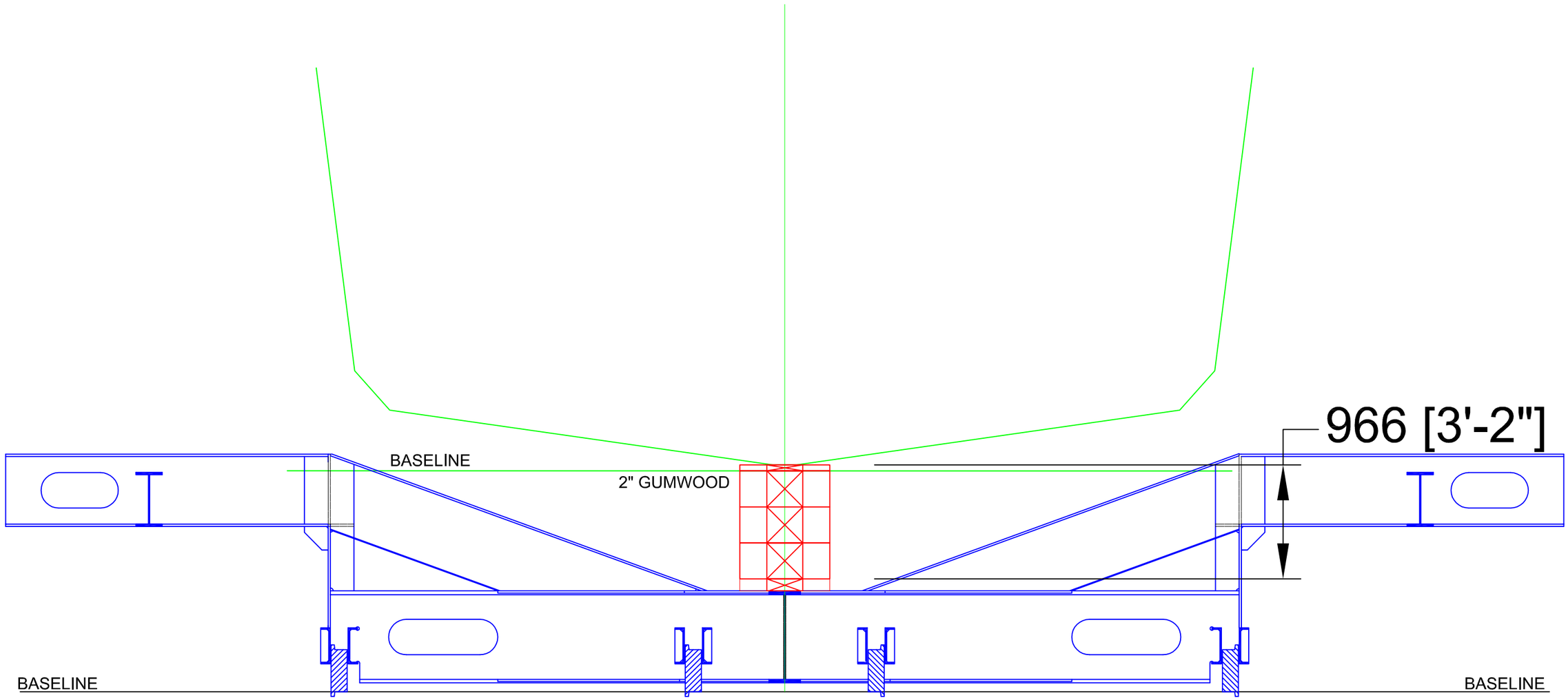

KESTREL FR.39 TO 45
KEEL BLOCKS #1 TO #3

REV	DATE	DESCRIPTION	DWN BY	CHK	APP
3.2	13 JAN 2015	DOCKING BLOCKS	AMS	AS	AMS

CLIENT: VSY

PROJECT: KESTREL

TITLE: SHIP CRADLE
KEEL BLOCKS #1 TO #3 SECTION

GRAND MARINE LTD

www.grandmarine.com info@grandmarine.com

PROJECT No.	DOCKING	SCALE	DWG. NO:	SHT. NO.	REV.
A-14-33	0039	.	A-14-33-KB1-3	1 OF 1	3.2

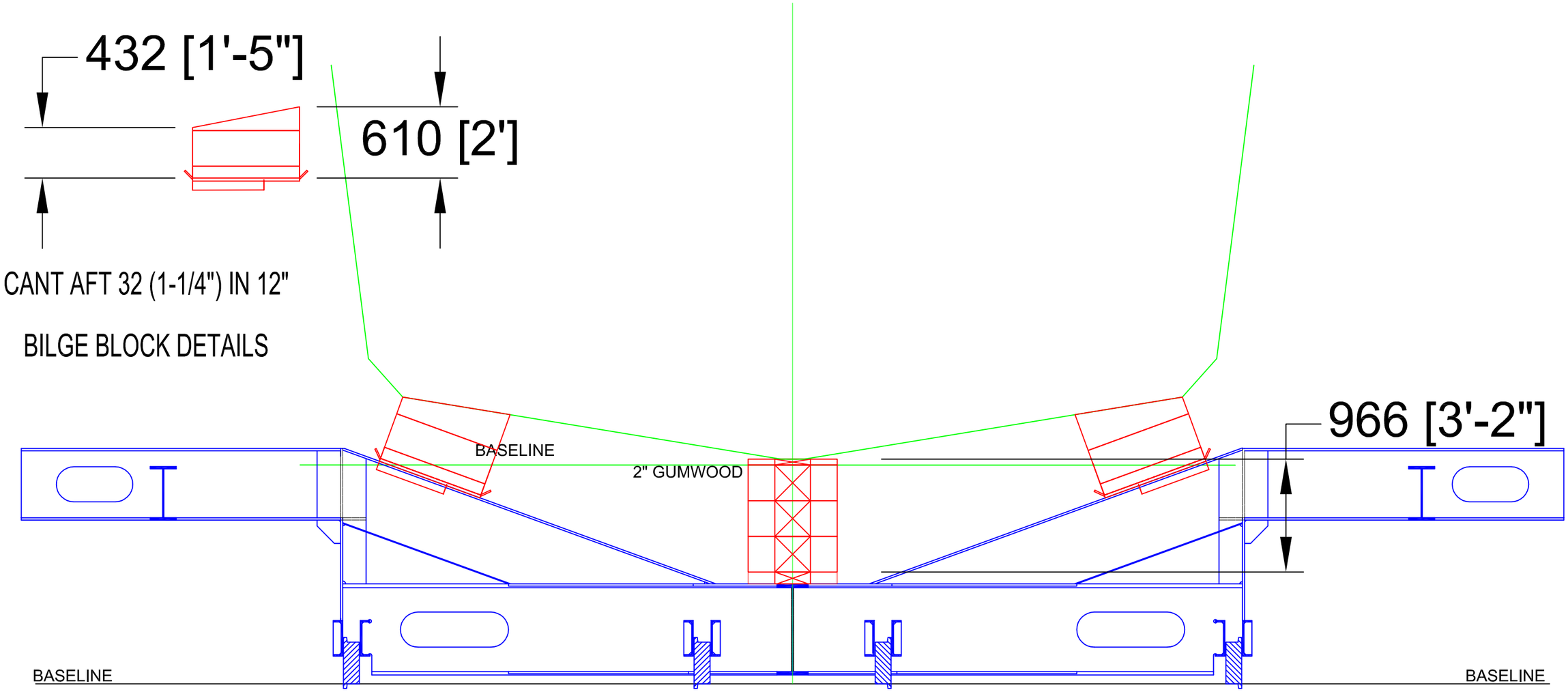

KESTREL FR.35 SECTION
KEEL BLOCK #4 & BILGE BLOCK #1

REV	DATE	DESCRIPTION	DWN BY	CHK	APP
3.4	5 MAR 2015	BILGE BLOCKS #1, AS DOCKED	AMS	AS	AMS
3.2	13 JAN 2015	DOCKING BLOCKS	AMS	AS	AMS

CLIENT: VSY

PROJECT: KESTREL

TITLE: SHIP CRADLE
KEEL BLOCK #4 SECTION

GRAND MARINE LTD

www.grandmarine.com info@grandmarine.com

PROJECT No.	DOCKING	SCALE	DWG. NO:	SHT. NO.	REV.
A-14-33	0039	.	A-14-33-KB4	1 OF 1	3.4

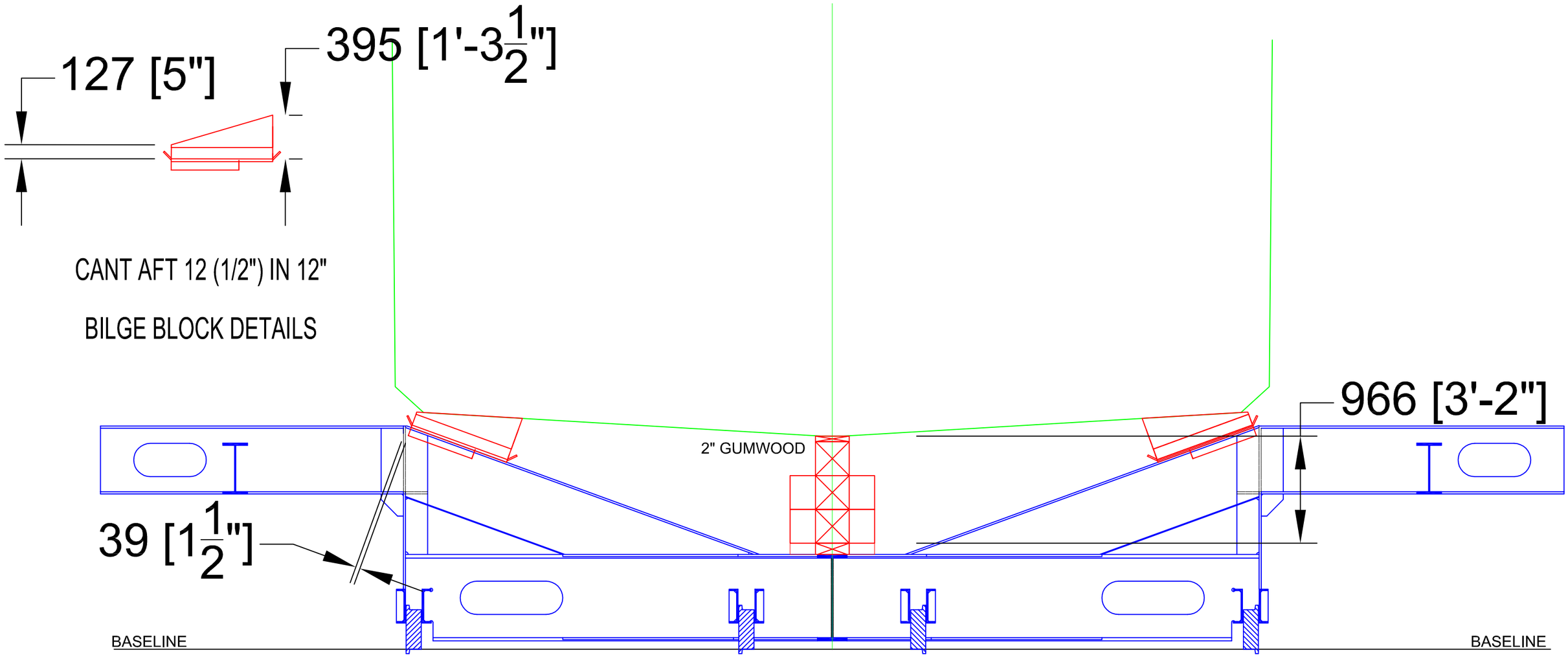

KESTREL FR.29 SECTION
KEEL BLOCK #6 & BILGE BLOCK #2

REV	DATE	DESCRIPTION	DWN BY	CHK	APP
3.4	5 MAR 2015	BILGE BLOCKS #1, AS DOCKED	AMS	AS	AMS
3.2	13 JAN 2015	SEACHESTS & TRANSDUCERS	AMS	AS	AMS

CLIENT: VSY

PROJECT: KESTREL

TITLE: SHIP CRADLE
KEEL BLOCK #6 SECTION

GRAND MARINE LTD

www.grandmarine.com info@grandmarine.com

PROJECT No.	DOCKING	SCALE	DWG. NO:	SHT. NO.	REV.
A-14-33	0039	.	A-14-33-KB6	1 OF 1	3.4

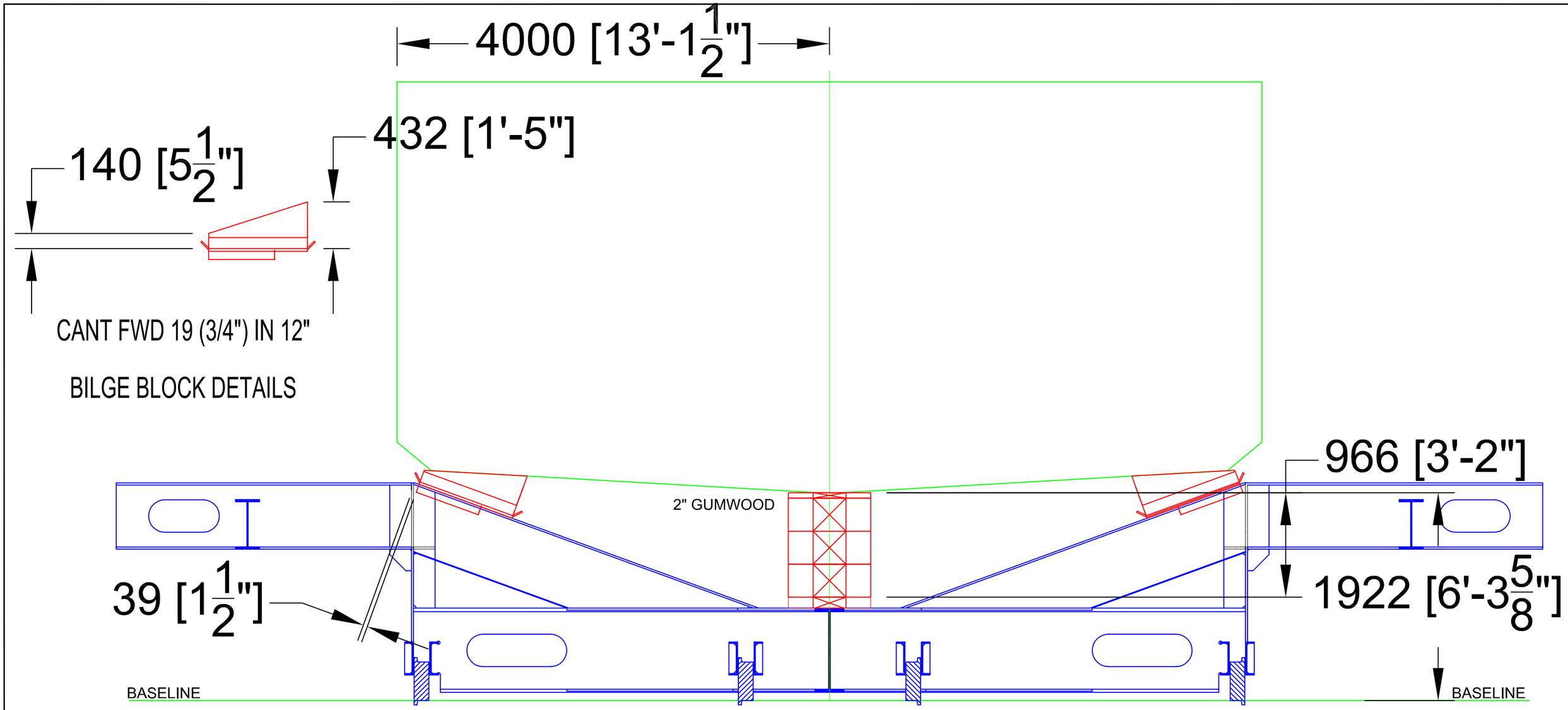

KESTREL FR.22 SECTION
KEEL BLOCK #7 & BILGE BLOCK #3

REV	DATE	DESCRIPTION	DWN BY	CHK	APP
3.4	5 MAR 2015	BILGE BLOCKS #1, AS DOCKED	AMS	AS	AMS
3.2	13 JAN 2015	DOCKING BLOCKS	AMS	AS	AMS

CLIENT: VSY

PROJECT: KESTREL

TITLE: SHIP CRADLE
KEEL BLOCK #7 SECTION

GRAND MARINE LTD

www.grandmarine.com info@grandmarine.com

PROJECT No.	DOCKING	SCALE	DWG. NO:	SHT. NO.	REV.
A-14-33	0039	.	A-14-33-KB7	1 OF 1	3.4

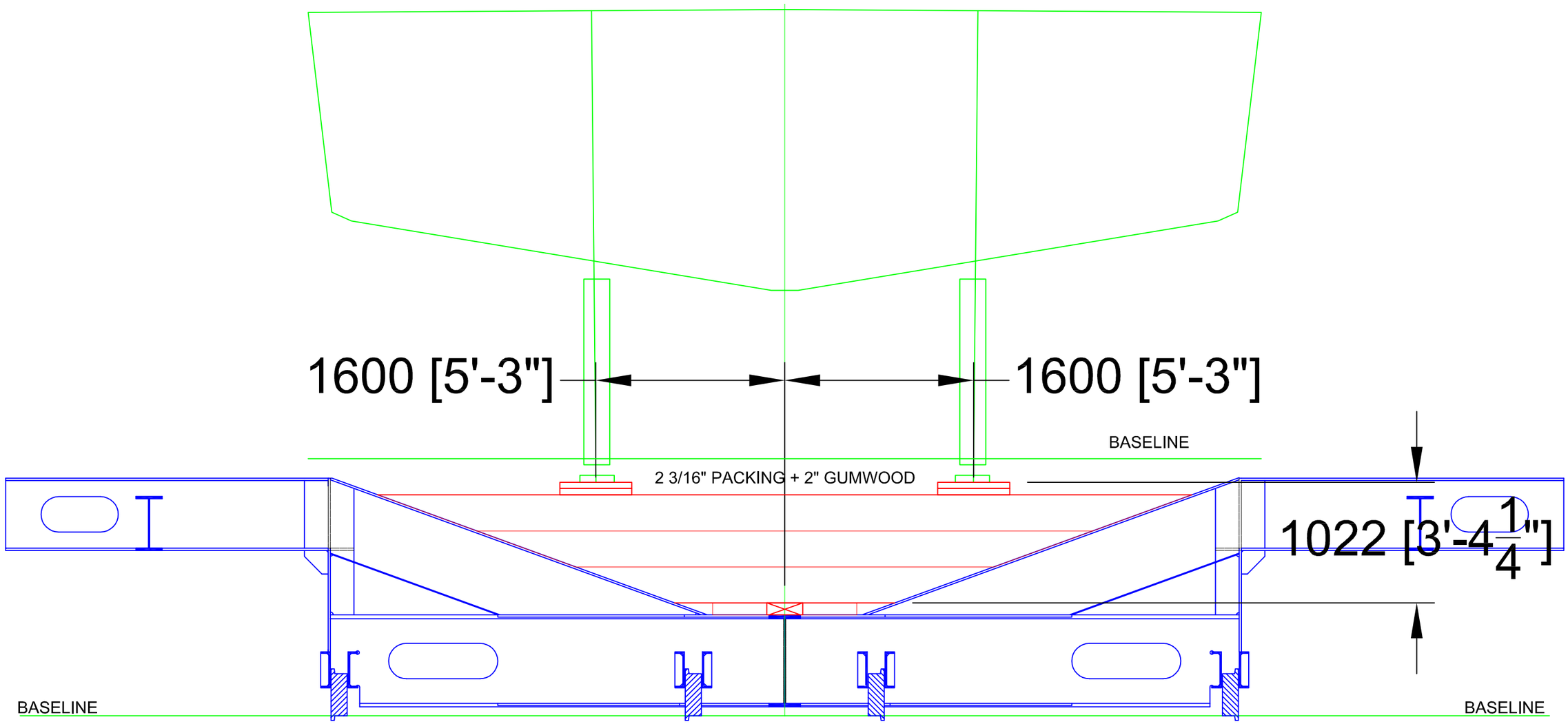

KESTREL FR.5.5 SKEGS SECTION
CRADLE KEEL BLOCK #12

REV	DATE	DESCRIPTION	DWN BY	CHK	APP
3.2	13 JAN 2015	PACKING + GUMWOOD	AMS	AS	AMS

CLIENT: VSY

PROJECT: KESTREL

TITLE: SHIP CRADLE
KEEL BLOCK #12 SKEGS SECTION

GRAND MARINE LTD

www.grandmarine.com info@grandmarine.com

PROJECT No.	DOCKING	SCALE	DWG. NO:	SHT. NO.	REV.
A-14-33	0039	.	A-14-33-KB12	1 OF 1	3.2

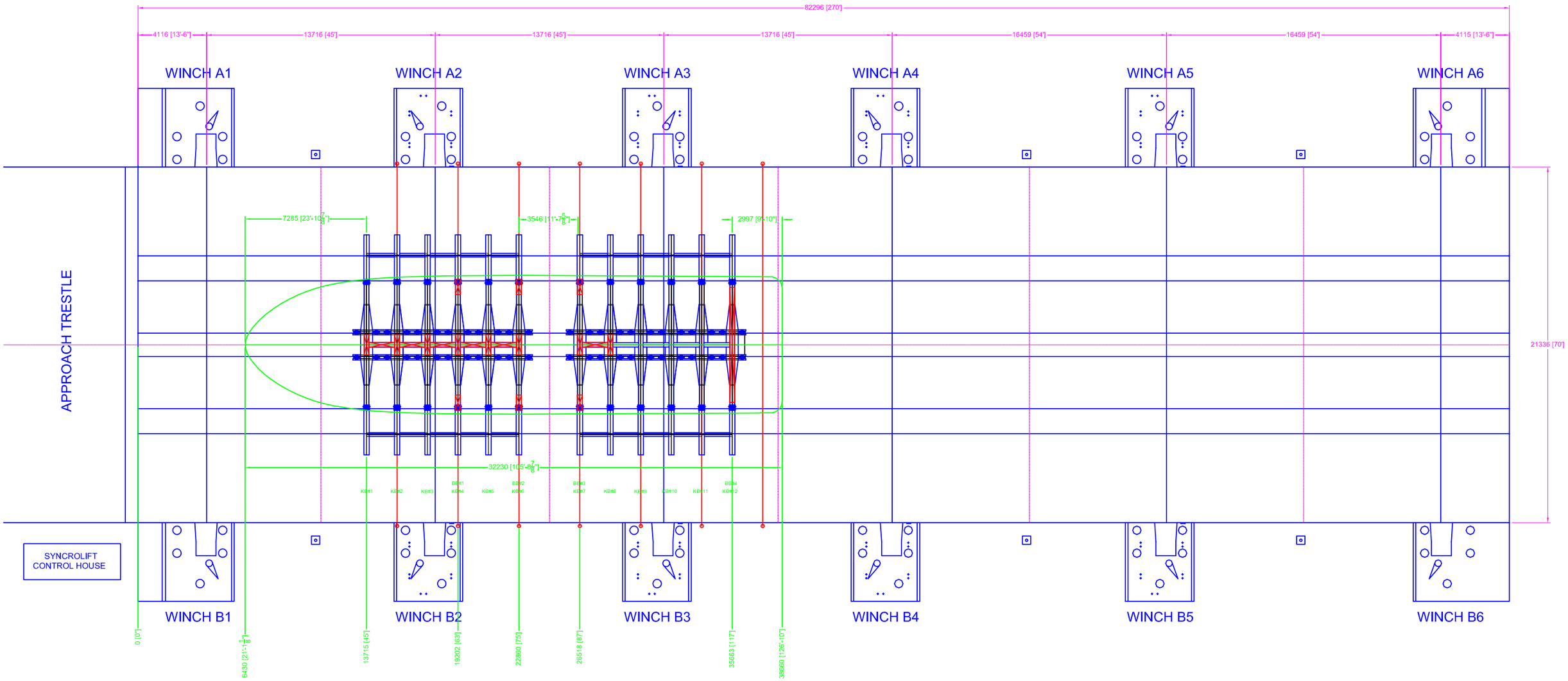

REV	DATE	DESCRIPTION	DWN BY	CHK	APP
		.			
3.2	13 JAN 2015	SYNCROLIFT POSITION	AMS	AS	AMS

CLIENT: VSY

PROJECT: KESTREL

TITLE: SYNCROLIFT ARRANGEMENT PLAN VIEW

GRAND MARINE LTD

www.grandmarine.com info@grandmarine.com

PROJECT No.	DOCKING	SCALE	DWG. NO:	SHT. NO.	REV.
A-14-33	0039	.	A-14-33-07	1 OF 1	3.2

GRAND MARINE LTD.

SPMT LOADING ANALYSIS

1. VESSEL PRINCIPAL PARTICULARS

LENGTH OVERALL	105.64	FT	32.20	M
LENGTH BETWEEN PERPENDICULARS	97.44	FT	29.70	M
BREADTH MOULDED	26.25	FT	8.00	M
DEPTH MOULDED	11.48	FT	3.50	M
FORWARD FLOAT ON DRAFT	5.91	FT	1.80	M
AFT FLOAT ON DRAFT	7.87	FT	2.40	M
MEAN DRAFT	6.89	FT	2.10	M
WEIGHT BASED ON PREVIOUS DOCKING	**274.00**	LT	278.40	MT
STATIC LOAD (5% CONTINGENCY)	287.70	LT	292.32	MT
DYNAMIC LOAD (1.1 X STATIC)	316.47	LT	321.55	MT

2. SPMT CAPACITY

NUMBER OF AXLE LINES	32		32	
TOTAL NUMBER OF TIRES	128		128	
ALLOWABLE LIFTING CAPACTIY PER TIRE	7.87	LT	8.00	MT
MAXIMUM ALLOWABLE LIFTING CAPACITY	1,008	LT	1,024	MT
VESSEL + 5% CONTINGENCY + 0.1 G + CRADLE	387	LT	393	MT
ACTUAL LOAD ON TIRES	3.02	LT	3.07	MT
PERCENTAGE OF ALLOWABLE	38.4%		38.4%	
PASS OR FAIL	PASS		PASS	

3. NOTES

1. VESSEL WEIGHT ESTIMATED BASED ON DRAFTS SUPPLIED BY SEASPAN.
2. A 5% CONTINGENCY WAS USED, AS PER NOBLE DENTON GUIDELINES.
3. A DYNAMIC LOAD OF 0.1 G IS USED.

GRAND MARINE LTD.

SPMT STABILITY ANALYSIS

1. VESSEL PARTICULARS AND CENTRE OF GRAVITY

LENGTH AT DESIGN WATER LINE	97.44 FT	29.70 M
BREADTH	26.25 FT	8.00 M
DEPTH	11.48 FT	3.50 M
WEIGHT	**274.00** LT	278.40 MT
VERTICAL CENTRE OF GRAVITY (VCG) (estimated)	8.61 FT	2.63 M
LONGITUDINAL CENTRE OF GRAVITY (LCG) (estimated)	0.00 FT	0.00 M
TRANVERSE CENTRE OF GRAVITY (TCG) (estimated)	0.00 FT	0.00 M

FRAME OF REFERENCES:

VCG - MEASURED FROM BASELINE, (+) ABOVE BASELINE
LCG - MEASURED FROM MIDSHIP, (+) FORWARD OF MIDSHIP
TCG - MEASURED FROM CENTRE LINE, (+) STBD OF CENTRE LINE

2. HYDRAULIC STABILITY, 3 - POINT SUSPENSION

TRANSVERSE STABILITY

TRANSVERSE STABILITY ARM (FROM DRAWING)	7.959 FT	2.43 M
DISTANCE FROM SPMT BASELINE TO VESSEL BASELIN	6.306 FT	1.92 M
VCG MEASURED FROM THE SPMT BASELINE	14.918 FT	4.55 M
TRANSVERSE HYDRAULIC STABILITY ANGLE	**28.1 DEGREES**	
DISTANCE BETWEEN SPMT OUTBOARD EDGES	43.291 FT	13.20 M
MAXIMUM HEIGHT DIFFERENCE BETWEEN THE SPMT'S BEFORE BECOMING UNSTABLE	20.378 FT	6.21 M

LONGITUDINAL STABILITY

LONGITUDINAL STABILITY ARM (FROM DRAWING)	18.373 FT	5.60 M
DISTANCE FROM SPMT BASELINE TO VESSEL BASELIN	6.306 FT	1.92 M
VCG MEASURED FROM THE SPMT BASELINE	14.918 FT	4.55 M
LONGTUDINAL HYDRAULIC STABILITY ANGLE	**50.9 DEGREES**	
LENGTH OF SPMT's	73.5 FT	22.40 M
MAXIMUM HEIGHT DIFFERENCE BETWEEN THE SPMT'S BEFORE BECOMING UNSTABLE	57.1 FT	17.39 M

PROJ.NO. : A-14-33
DATE : 9 January 2015
DOCKING #0039
PROJECT: DOCKING PLAN
VESSEL : KESTREL

REV. NO.: 3.0

GRAND MARINE LTD.

SYNCROLIFT CAPACITY ANALYSIS

1. SYNCROLIFT WINCH LIFTING CAPACITY

VESSEL WEIGHT	**274.00** LT	278.40 MT
SHIP CRADLE ESTIMATED WEIGHT PER FRAME	5.85 LT	5.95 MT
NUMBER OF SHIP CRADLES USED FOR DOCKING	12 SHIP CRADLE FRAMES	
ESTIMATED TOTAL WEIGHT OF CRADLE	70.23 LT	71.36 MT
WHEELS PER FRAME	6	6
TOTAL NUMBER OF WHEELS	72	72
VESSEL LOAD PER WHEEL	3.81 LT/WHEEL	3.87 MT/WHEEL
CRADLE LOAD PER WHEEL	0.98 LT/WHEEL	0.99 MT/WHEEL
TOTAL LOAD PER WHEEL	4.78 LT/WHEEL	4.86 MT/WHEEL

	NUMBER OF CRADLES AS SEEN PER WINCH						
WINCHES	**1**	**2**	**3**	**4**	**5**	**6**	**TOTAL**
NUMBER OF TRANSVERSE BEAMS	0	6	6	0	0	0	12
	NORTH					SOUTH	
	NUMBER OF WHEELS AS SEEN PER WINCH						
WINCHES	**1**	**2**	**3**	**4**	**5**	**6**	**TOTAL**
NUMBER OF WHEELS	0	36	36	0	0	0	72
							LT

WINCH (PORT & STBD)	**1**	**2**	**3**	**4**	**5**	**6**	**TOTAL**
VESSEL WEIGHT	0	137	137	0	0	0	274
CRADLE WEIGHT	0	35	35	0	0	0	70
PLATFORM WEIGHT	74	78	82	96	94	80	504
STATIC LOAD = (Vessel + Cradle + Platform) * 1.05	78	263	267	101	99	84	891
DYNAMIC LOAD = STATIC LOAD * 1.10	**85**	**289**	**294**	**111**	**109**	**92**	**980**
MAXIMUM ALLOWABLE LOAD	**360**	**360**	**360**	**360**	**360**	**360**	**2,160**
PASS OR FAIL	PASS	PASS	PASS	PASS	PASS	PASS	PASS

2. SYNCROLIFT CAPACITY PER GIRDER

WINCH	**1**	**2**	**3**	**4**	**5**	**6**	**TOTAL**
Allowable Load (LT/ft)	9.4	6.5	6.5	5.7	5.1	8.0	
Span Length (ft)	36.0	45.0	45.0	49.5	54.0	40.5	270.0
Allowable Load per Span	**338.4**	**292.5**	**292.5**	**282.2**	**275.4**	**324.0**	**1805.0**
Vessel + Cradle Load	0	172	172	0	0	0	344.2
(Vessel + Cradle Load) * 1.05 *1.10	**0**	**199**	**199**	**0**	**0**	**0**	**397.6**
PASS OR FAIL	PASS	PASS	PASS	PASS	PASS	PASS	PASS

NOTES:
1. VESSEL WEIGHT ESTIMATED BASED ON DRAFTS SUPPLIED BY SEASPAN FROM PREVIOUS DOCKING
2. A 5% CONTINGENCY WAS USED, AS PER NOBLE DENTON GUIDELINES.
3. THIS ANALYSIS ASSUMES EVENLY DISTRIBUTED LOAD OVER THE SUPPORTED LENGTH.
4. LIVE LOAD ALLOWABLE SYCROLIFT CAPACITIES PROVIDED BY SWAN WOOSTER ENGINEERING.