SHEET NOTES

1. CONNECT 2" VENT TO EXISTING VERTICAL 2" VENT UP TO 3" VTR.

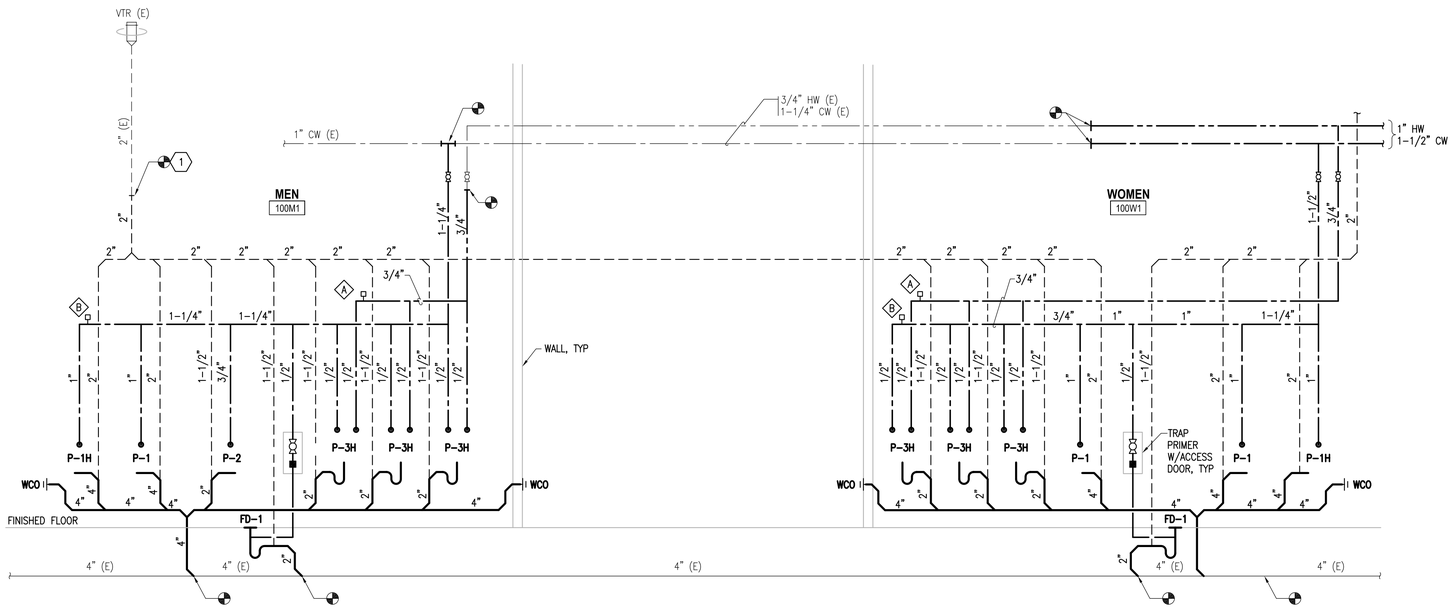

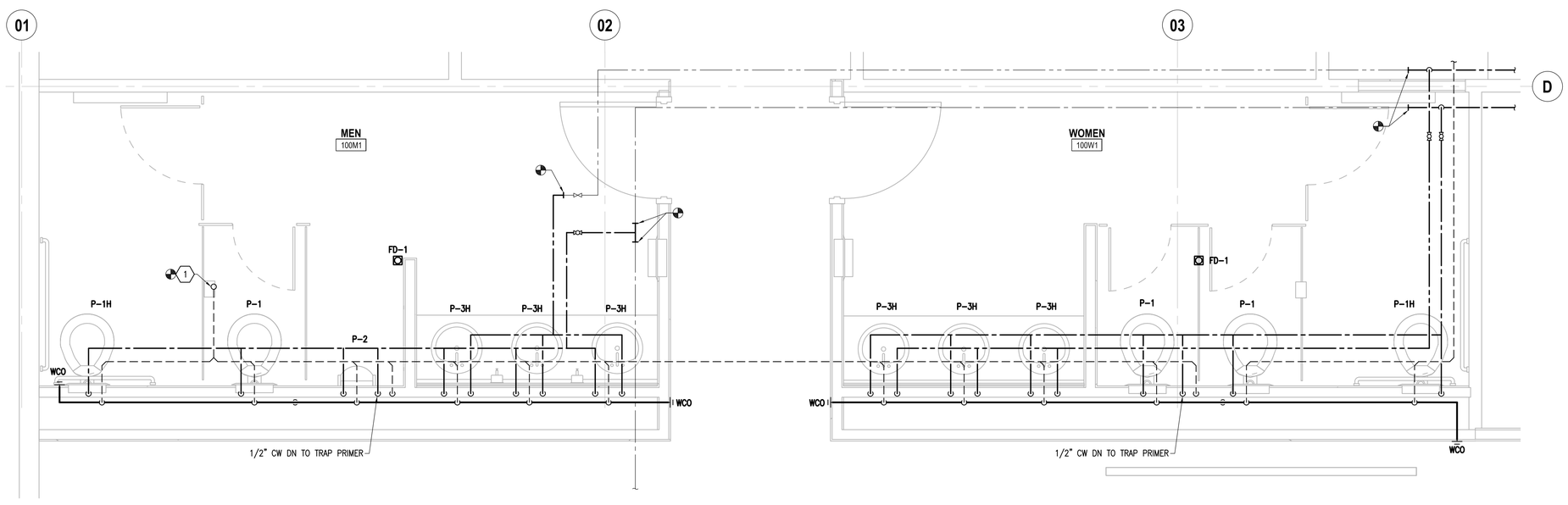

1 M401 ENLARGED PLAN – PLUMBING

SCALE: 1/2" = 1'-0"

0 4' 8' 16' 24'

RIM ARCHITECTS
ALASKA | HAWAII GUAM CALIFORNIA
645 'G' STREET, SUITE 400
ANCHORAGE, ALASKA 99501
Phone: 907.258.7777
Fax: 907.279.8195
www.rimarchitects.com

STATE OF ALASKA 49TH Bart A. Semmler 04/07/2017 ME-13385 REGISTERED PROFESSIONAL ENGINEER © 17605

AMC ENGINEERS
www.amc-engineers.com
Adams, Morgenthaler & Co., Inc.
CoA No. C0342 - 907.257.9100
701 E. Tudor Rd. Suite 250
Anchorage, AK 99503

PROJECT TITLE: UAA ANSEP ULA RENOVATION

ADDRESS: UNIVERSITY LAKE BUILDING - BUILDING AO 107

OWNER: UNIVERSITY OF ALASKA ANCHORAGE

SHEET TITLE: ENLARGED PLAN - PLUMBING

NO	DESCRIPTION	DATE

DATE :	2017.04.07
PROJECT NO :	17-0103
DRAWN BY :	BAS
CHECKED BY :	MDL
COPYRIGHT :	2015 RIM ARCHITECTS

DWG NO: M401

FILE NAME: X:\17605 ANSEP\Dwgs\Mdwg\Sheet Files\17605 – M401.dwg
PLOTTED: BAS 4/7/2017 4:18 PM