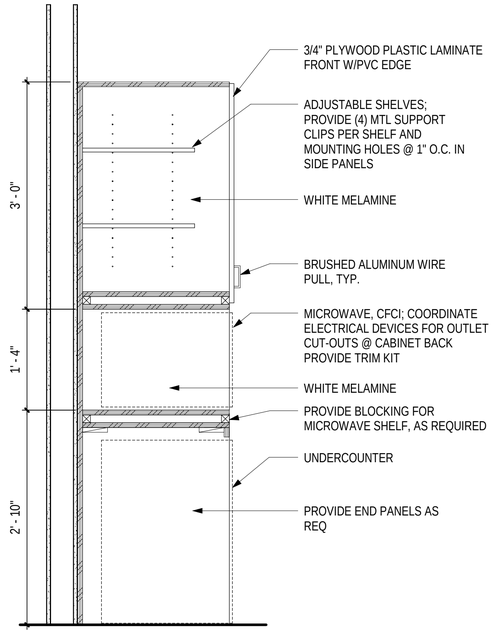

6 A502 MICRO/REFRIGERATOR TOWER
1" = 1'-0"

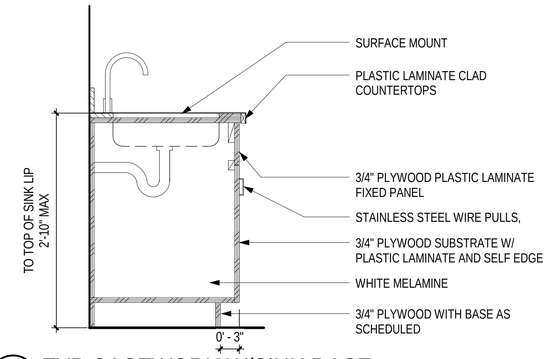

5 A502 TYP CASEWORK W/SINK BASE
1" = 1'-0"

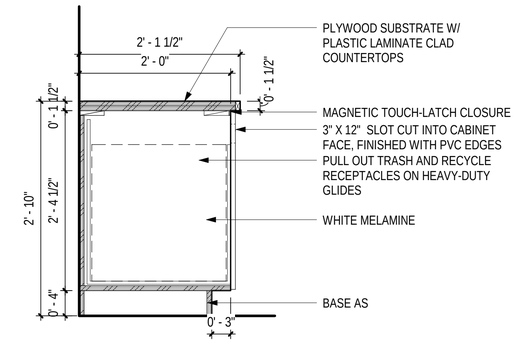

4 A502 TYP CASEWORK TRASH/RECYCLE
1" = 1'-0"

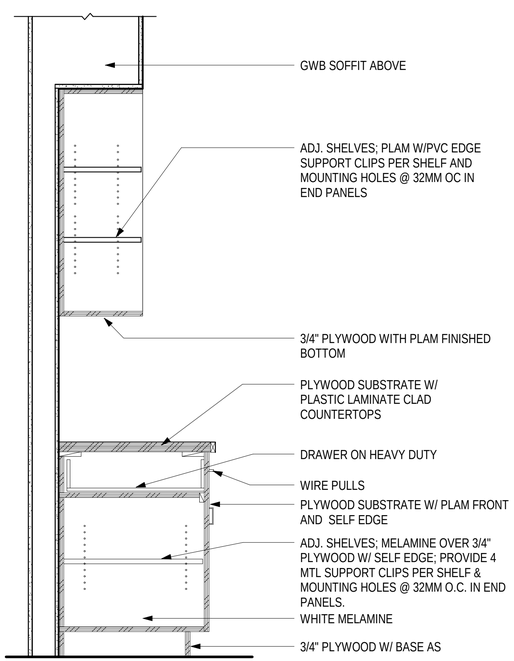

3 A502 TYP CASEWORK W/OPEN UPPERS
1" = 1'-0"

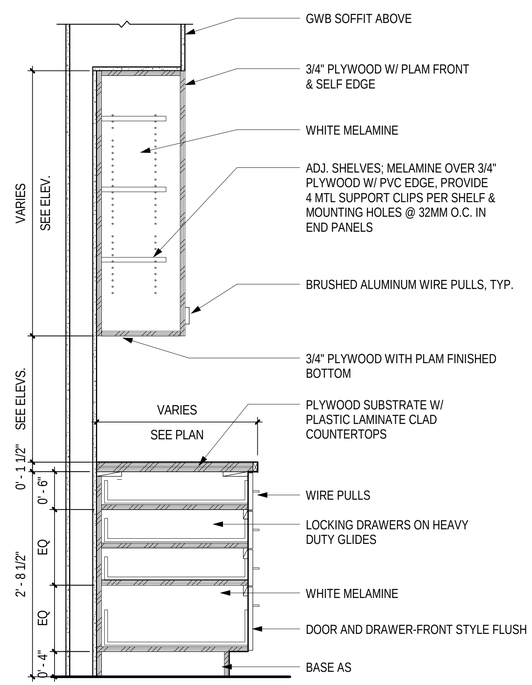

2 A502 TYP CASEWORK W/DWR BASE
1" = 1'-0"

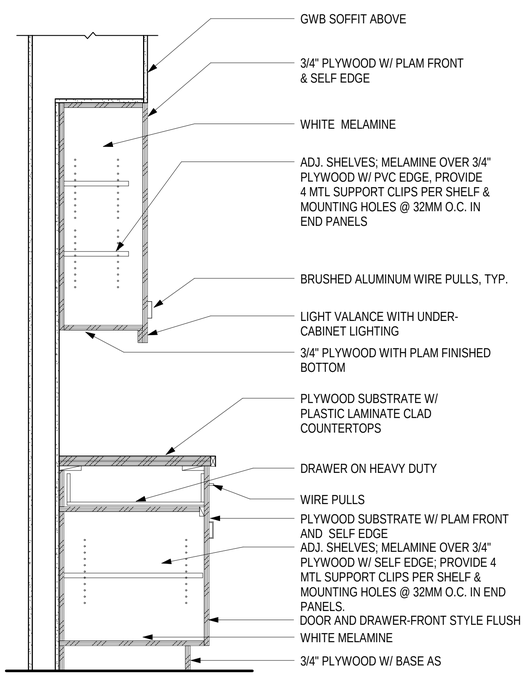

1 A502 TYP CASEWORK W/CAB BASE
1" = 1'-0"

RIM ARCHITECTS
ALASKA HAWAII GUAM CALIFORNIA
645 'G' STREET, SUITE 400
ANCHORAGE, ALASKA 99501
Phone: 907.258.7777
Fax: 907.279.8195
www.rimarchitects.com

CONSTRUCTION DOCUMENTS

PROJECT TITLE: UAA ANSEP ULA RENOVATION

ADDRESS: UNIVERSITY LAKE BUILDING - BUILDING AO 107

OWNER: UNIVERSITY OF ALASKA ANCHORAGE

SHEET TITLE: CASEWORK DETAILS

NO	DESCRIPTION	DATE

DATE :	2017.04.07
PROJECT NO :	151065.101
DRAWN BY :	Author
CHECKED BY :	Checker
COPYRIGHT :	2017 RIM ARCHITECTS

CORPORATE NO. AECL 1227

DWG NO:

A502