Facilities Planning & Construction
UNIVERSITY of ALASKA ANCHORAGE

**INVITATION FOR BID**

# UAA RAS WEIDNER CLASSROOM

## Anchorage, Alaska

**PROJECT NO.: 17-0033**
**BID NUMBER: 17-06**

**Building Name: Rasmuson Hall**
**Building Number: AS105**

**ISSUED: March 22, 2017**

**FACILITIES PLANNING AND CONSTRUCTION**
**3890 UNIVERSITY LAKE DRIVE, SUITE 110**
**ANCHORAGE, AK 99508-4669**
**(907) 786-4900**

This page intentionally left blank

# TABLE OF CONTENTS
# UAA RAS WEIDNER CLASSROOM


| SECTION | TITLE |
|---|---|
| **BID DOCUMENTS** | |
| 00 00 01 | Date Summary |
| 00 00 02 | Procurement Code |
| 00 10 00 | Notice of Invitation for Bids (includes map to pre-bid conference location) |
| 00 20 00 | Instructions to Bidders |
| 00 41 00 | Bid Form |
| 00 42 00 | Bid Bond |
| **CONTRACT DOCUMENTS** | |
| 00 50 00 | Agreement Between Owner and Contractor |
| 00 62 00 | Performance Bond |
| 00 63 00 | Payment Bond |
| 00 64 00 | Alaska Products Preference Worksheet |
| 00 65 00 | UAA Forms |
| 00 70 00 | General Conditions |
| 00 80 00 | Special Conditions |
| 00 82 00 | State of Alaska Department of Labor Minimum Rates of Pay |
| **DIVISION 1** | **GENERAL REQUIREMENTS** |
| 01 10 00 | Summary of Work |
| 01 25 00 | Contract Modification Procedure |
| 01 29 00 | Payment Procedure |
| 01 31 00 | Project Management and Coordination |
| 01 32 00 | Construction Progress |
| 01 33 00 | Submittal Procedures |
| 01 40 00 | Quality Control |
| 01 41 00 | Site Safety Requirements |
| 01 50 00 | Temporary Controls |
| 01 60 00 | Product Requirements and Substitutions |
| 01 73 00 | Cutting and Patching |
| 01 74 00 | Cleaning |
| 01 75 00 | Startup |
| 01 77 00 | Closeout Procedure |
| 01 78 00 | Closeout Submittals |
| 01 82 00 | Demonstration & Training |
| **APPENDIX** | |
| Appendix A | Mobilization Map |
| Appendix B | Cable Pull Schedule |
| Appendix C | AV Drawing |

**TECHNICAL SPECIFICATIONS**

Technical specifications on drawing sheets.

**DRAWINGS**

| | |
|---|---|
| G100 | Title Sheet & Drawing Index |
| A001 | Abbreviations, Symbols and Materials |
| A010 | Building Code Summary/ Code Plan/ Partition / Wall Types |
| A111 | Existing & Demolition Floor Plans |
| A112 | Remodel Floor Plan |
| A151 | Existing & Demolition Reflected Ceiling Plans |
| A152 | Remodel Ceiling Plan |
| A350 | Wall Sections |
| A450 | Interior Elevations, Doors and Frames |
| A560 | Interior Details |
| A800 | Remodel Floor Finishes Plan & Remodel Furniture Plan |
| A900 | Technical Architectural Specifications |
| A901 | Technical Architectural Specifications |
| A902 | Technical Architectural Specifications |
| A903 | Technical Architectural Specifications |
| A904 | Technical Architectural Specifications |
| AR860 | Reference - Floor Finishes & Furniture Plan |
| S152 | Remodel Framing Plan |
| S153 | Remodel Framing Details |
| M100 | Legend and Specifications |
| M200 | Floor Plans - Mechanical |
| E001 | Legend |
| E002 | Specifications & Schedules |
| E100 | Overall Plan |
| E101 | Demolition Plans |
| E200 | Enlarged Plans - Classroom |
| E201 | Enlarged Plans – Electrical & Telecom Rooms |
| E300 | Details and Diagrams |

View towards Main Classroom Entry
Interior Classroom View towards Entry
View from Atrium
View from Southeast

# Specified Dates

UAA BID NO. 17-06

UAA RAS Weidner Classroom
Project No. 17-0033
Building Name: Rasmuson Hall
Building No. AS105

Date Issued: March 22, 2017
Pre-Bid: March 29, 2017 @ 2:30 PM (RH Rm 111 – Map Attached)
Alternate Brand Request Submission Deadline: March 30, 2017 @ 2:00 PM
Last Date to Submit Questions: April 6, 2017 @ 2:00 PM
Last Date to Issue Addenda: April 7, 2017
Bid Due Date: April 13, 2017 @ 2:00 PM AKST

**NOTE**

Dates shown on this document are for general information only and are subject to change. Specific contractual dates for the Bid Opening, Pre-Bid Conference, Alternate Brand Request, and Questions are set forth in the Instructions to Bidders, General Conditions, and the Notice of Invitation to Bid. Any modification of the above dates by addendum will modify the contract documents, not this summary.

This page intentionally left blank.

**IMPORTANT**

**This Invitation for Bid conforms to the State Procurement Code for the State of Alaska. Bidders are strongly advised to study the bid documents very carefully and be fully aware of the revisions made to these pages to conform to AS 36.30.**

**THE WORK PERFORMED IN CONJUCTION WITH THIS IFB IS SUBJECT TO THE STATE OF ALASKA TITLE 36 PUBLIC CONTRACTS PREVAILING WAGE RATES.**

**If you have any questions, please call Facilities Planning & Construction's Fiscal Manager, Sandra Blum at 907-786-4905.**

**Clarification on Alaska Bidder Preference and Alaska Product Preference can be viewed on line at**

http://commerce.alaska.gov/dnn/ded/dev/AlaskaProductPreferenceProgram.aspx

This page intentionally blank.

# NOTICE OF INVITATION FOR BIDS

**PROJECT:** **UAA RAS WEIDNER CLASSROOM**
**PROJECT NO.:** **17-0033**
**BID NO.:** **17-06**
**BUILDING NAME:** **RASMUSON HALL**
**BUILDING NUMBER:** **AS105**

Sealed bids, in single copy, for **UAA RAS Weidner Classroom**, will be received by the University of Alaska Anchorage, Facilities Planning and Construction until **April 13, 2017 at 2:00 pm** prevailing time, at 3890 University Lake Drive, Suite 110, Anchorage, AK 99508, at which time bids will be publicly opened and read aloud.

**The work consists of demolition of partition walls and new construction, storefront, electrical, mechanical and AV design located at:**
**Rasmuson Hall**
**3416 Seawolf Drive**
**Anchorage, AK 99508**

A pre-bid conference will be held on **March 29, 2017 at 2:30 pm, onsite** at **Rasmuson Hall Room 111, 3416 Seawolf Drive, Anchorage, AK 99508 (map attached at the end of this section).**

All bids must be accompanied by a bid bond provided by a surety authorized to do business in the State of Alaska on a form provided herein, or a cashier's check. Bid security must be in an amount equal to at least five percent (5%) of the maximum amount of the bid.

Questions regarding this IFB shall be directed, in writing, to UAA Facilities Planning & Construction at **uaa_fpc@alaska.edu** for action.

Complete bidding documents for this project are available in electronic form. They may be viewed online and downloaded without charge and without deposit from www.aeplans.com. Contact Mike Strock at AEPlans, LLC at 877-287-4905, extension 208 for information regarding access to AEPlans site and instructions for viewing and downloading construction drawings, specifications and addenda.

Bidders must register through the web site to be notified of addenda. Bid documents are not available from the Architect or the Owner, but they may be obtained from most plan rooms and reprographic firms for a fee. Printed copies may be ordered from reprographic companies through the website or by contacting a reprographer directly.

Downloaded files may be printed on the plan holder's equipment. Plan holders are responsible for their own reproduction costs. Please go to www.aeplans.com to download the UAA project documents, for distribution to your members. No hard copies will be sent. Addenda to the project will be posted on the website. The bidder is responsible for periodically checking the site. The Contractor that is awarded the project will be responsible for printing all documents necessary for performing the work.

Prime Bidders, Sub Contractors and Suppliers obtaining bid documents are cautioned not to obtain

partial or incomplete sets of bid documents (drawings and specifications) for the purposes of bidding. It is the responsibility of the bidder(s) to insure that complete sets of bid documents as posted on AEPlans are obtained. Neither the Owner nor the Architect shall be held responsible for errors in downloading or the printing of incomplete sets of documents by the bidder(s).

BIDDERS ARE ADVISED THE UNIVERSITY OF ALASKA HAS A PROCEDURE FOR ACCEPTING EQUAL PRODUCTS OR SYSTEMS PRIOR TO BID OPENING. SUBSTITUTIONS AFTER AWARD ARE LIMITED. SEE INSTRUCTIONS TO BIDDERS AND THE GENERAL CONDITIONS.

Sealed envelopes containing bids must be marked as follows:

**Upper Left Hand Corner:**
**Name of Bidder**
**City, State, Zip Code**

**Center of Envelope:**
**SEALED BID - DO NOT OPEN**

**PROJECT: UAA RAS WEIDNER CLASSROOM**
**PROJECT NO: 17-0033**
**BID NO: 17-06**
**BUILDING NAME: RASMUSON HALL**
**BUILDING NUMBER: AS105**

**Deliver or Mail Envelopes to:**

**UNIVERSITY OF ALASKA ANCHORAGE**
**FACILITIES PLANNING AND CONSTRUCTION**
**3890 UNIVERSITY LAKE DRIVE, SUITE 110**
**ANCHORAGE, AK 99508-4669**

**NOTE: Mailed bids must be received by the UAA Facilities Planning and Construction before the bid due date and time.**

The University of Alaska Anchorage is an affirmative action/equal opportunity employer and educational institution.

# PRE-BID CONFERENCE LOCATION MAP

This page intentionally left blank.

# INSTRUCTIONS TO BIDDERS

Bids to be entitled to consideration must be made in accordance with the following instructions:

**1. INVITATION FOR BIDS**

Bidders shall familiarize themselves with the requirements of all of the Invitation for Bid (contract documents) including the Instructions to Bidders, the Bid Form, the Agreement, the General Conditions, the Special Conditions, the Specifications, the Drawings, any addenda issued prior to the receipt of bids, and any other documents referenced or referred to therein.

**2. EXAMINATION OF SITE**

A. Bidders should visit the site and take such other steps as may be reasonably necessary to ascertain the nature and location of the Work and the general and local conditions unique to this project which can affect the Work or the cost of the Work, including but not limited to:

1) Conditions bearing upon transportation, disposal, handling, and storage of materials;
2) The availability of labor, water, electric power, and roads;
3) Uncertainties of weather, river stages, tides, or similar physical conditions at the sites;
4) The conformation and conditions of the ground; and
5) The character of equipment and facilities needed preliminary to and during work performance.

B. Any failure of the Bidder to take the actions described and acknowledged in this paragraph will not relieve the Bidder from responsibility for estimating properly the difficulty and cost of successfully performing the Work.

**3. EXAMINATIONS AND INTERPRETATION OF DOCUMENTS**

Each bidder shall examine the Invitation for Bid carefully and shall make written requests to the Owner for interpretation or correction of any ambiguity, inconsistency, discrepancy, omission, or error therein which the bidder may discover. Any interpretation or correction will be issued in an addendum by the Owner. Only a written interpretation shall be binding. No bidder shall rely on any interpretation or correction given by any other method. If the Bidder is not satisfied with the Owner’s response, the Bidder must file a protest in accordance with paragraph 6. Failure to file such a protest constitutes waiver of the issues that could have been brought in the protest.

**4. "OR EQUAL" PRODUCTS**

Whenever a material, article, piece of equipment or system is identified in the Invitation for Bid by reference to manufacturers' or vendors' name, trade names, catalog numbers, etc., it is intended to establish a minimum standard. Unless otherwise noted, alternate brands of any material, article, equipment or system of other manufacturers or vendors which will perform adequately the duties imposed by the general design of the project will be considered equally acceptable; provided the material, article, equipment, or system so proposed is, in the opinion of the Owner, of equal substance, function, dimension, appearance, and quality.

Alternate brands may be approved if found by the Owner to be equal or better. A written request on the form provided must be submitted to the Owner for approval a minimum of fourteen (14)

calendar days in advance of the bid opening with description, catalog cuts, etc., and other information as may be required by the Owner for proper evaluation of the request. Any brand named product listed in the technical specification followed by the phrase "or equal" is understood to mean an alternate product, which, if presented, must be presented prior to bid opening as provided herein.

If in the opinion of the Owner an alternate brand is determined to be of equal substance, function, dimension, appearance, and quality, an addendum shall be issued to all parties who have been furnished an Invitation for Bid for bidding purposes.

**5. ADDENDA**

The Owner may modify the Invitation for Bid no later than five (5) calendar days prior to the date fixed for opening of bids by issuance of an addendum to all parties who have been furnished Invitation for Bid for bidding purposes. In determining the intervening calendar days between issuance of an addendum and bid opening, neither the day the addendum is issued nor the day of the bid opening is counted. An addendum may be issued up to and through the date fixed for opening the bids. If an addendum is issued on the date scheduled for bid opening bid date shall be extended in that addendum to allow at least the previously stated number of intervening days between issuance of an addendum and bid opening. Bidders must acknowledge receipt of all addenda on the Bid Form.

**6. PROTESTING SOLICITATION OR AWARD**

Any protest of the technical specifications or bid requirements of this solicitation (Invitation for Bid) shall be filed in writing with the Contracting Officer (Procurement Officer) of the issuing office not later than 5:00 p.m. of the seventh (7th) day preceding the date set for bid opening. Protests of the technical specifications or bid requirements resulting from addenda to this solicitation shall be filed with the issuing office not later than 5:00 p.m. of the fifth (5th) day following date of issue of the addendum. Protests filed after the above times shall not be considered.

A bidder may protest the award of a contract provided its protest is received within ten (10) calendar days of the date of issuance of a Notice-of-Intent-to-Award-a-Contract. Protests of an award or a proposed award shall be resolved in accordance with AS 36.30.560.699, Board of Regents Policies, and University of Alaska Procurement Regulations.

**7. BID FORM**

Bids must be submitted on the forms provided by the Owner, completed in all respects as required by the Bid Form and Invitation for Bid, and manually signed by an authorized official of the bidder. Bidders may make copies of the bid forms for submission of bids.

**8. SUBMISSION OF BID**

Bids must be submitted in a sealed envelope, marked with Bidder's name, project title and opening time, and addressed as directed in the Notice of Invitation For Bid and must be delivered to the office designated in the Notice of Invitation For Bid prior to the exact time set for opening bids. Bids must be signed by authorized persons and shall have original signatures. Bid shall be accompanied by bid security, addendum acknowledgement and such other material or information required by the Invitation For Bid. No bidder shall transmit a bidding document by facsimile

transmission (FAX), including but not limited to, bid forms, bid bonds, and modifications.

Each bidder must have a valid Alaska Business License, required under AS 36.30.110 (b), at the time the contract is awarded. To qualify as an Alaska Bidder a bidder shall have a valid business license at the time the bid is opened. The bidder must also be registered as required under AS 08.18. The registration and license numbers must be supplied on the bid form at time of bid. Within five (5) working days of the Owner's written identification of the apparent low bidder, or notice-of-intent-to-award a contract, the selected bidder will provide copies of its valid Alaska Business License and Contractor's Registration.

**9. BID SECURITY**

A. All bids must be accompanied by a bid bond provided by a surety authorized to do business in the state of Alaska on a form provided herein, or a cashier's check. Bid security must be in an amount equal to at least five (5) percent of the maximum amount of the bid.

B. Failure to furnish a bid guarantee in the proper form and amount, by the time set for opening of bids, may be cause for rejection of the bid.

C. The bid securities of the three lowest bidders will be held by the Owner until the Contract has been finally executed, but no longer than 45 calendar days after opening of bids, after which time the bid securities will be returned to such bidders. Bid securities of all other bidders will be returned to them within ten (10) working days after opening of bids.

D. If the successful Bidder, upon notice of intent to accept its bid by the Owner within the period specified for acceptance, fails to execute all contractual documents or give a bond(s) as required by the solicitation within the time specified, the Contracting Officer may declare the Bidder non-responsive and the amount of its bid guaranty may be retained by Owner as liquidated damages.

E. If all bids are rejected, the bid securities of all bidders will be returned within ten (10) working days after rejection.

**10. MODIFICATIONS OR WITHDRAWAL OF BIDS**

Bids may be modified or withdrawn by written notice received in the office designated in the Invitation for Bids prior to the time and date set for bid opening. The signature of the same person who signed the sealed bid form is required on the modification or withdrawal.

Written shall not reveal the bid price, but shall provide the addition, subtraction, or other modification so that the final prices or terms will not be known by the Owner until the sealed bid is opened.

**11. BID OPENING**

Bids will be opened in public, read aloud and recorded at the time set for opening in the Notice of Invitation for Bid. Bids may be inspected by bidders and others having a legitimate interest as determined by the Owner only after Notice-of-Intent-to-Award has been issued. Late bids will not be considered.

Within five (5) working days of the Owners identification of the apparent low bidder, as evidenced by the Owners written notification, the selected bidder shall furnish a list of subcontractors it proposes to use in the performance of the work of this project not later than 5:00 p.m. the fifth working day following receipt of written notification. The list must include:

a. The name and location of place of business of each subcontractor;
b. The nature of the work subcontracted identified by Technical Specification division and further identified by Section if more than one subcontractor doing work under one division; and
c. Copies of each subcontractor's Alaska Business License and Certificate of Registration required under AS.43.70 and AS.08.18, respectively.

Failure to supply the information required within the specified time shall be grounds for declaring the low apparent bid non-responsive. If a subcontractor on the list did not have a valid Alaska Business License under AS 43.70 and a valid Certificate of Registration under AS 08.18 at the time the bid was opened, the bidder may not use the subcontractor in the performance of the contract, and shall replace the subcontractor with a subcontractor who had a valid Alaska Business License and Certificate of Registration at the time the bid was opened.

If a bidder fails to list a subcontractor or lists more than one subcontractor for the same portion of work and the value of that work is in excess of half of one percent of the total bid, the bidder shall be considered to have agreed to perform that portion of the work without the use of a subcontractor and to have represented the bidder to be qualified to perform that work.

A bidder may replace a listed subcontractor if the subcontractor:

a. fails to comply with AS 08.18, Construction Contractors;
b. files for bankruptcy or becomes insolvent;
c. fails to execute a contract with the bidder involving performance of the work for which the subcontractor was listed and the bidder acted in good faith;
d. fails to obtain bonding;
e. fails to obtain insurance acceptable to the Owner;
f. fails to perform the contract with the bidder involving work for which the subcontractor was listed;
g. must be substituted in order for the prime contractor to satisfy required Owner federal affirmative action requirements;
h. refuses to agree or abide with the bidder’s labor agreement or;
i. is determined by the Owner not to be a responsible subcontractor.

A bidder who attempts to circumvent the requirements of this section by listing as a subcontractor another contractor who, in turn, sublets the majority of the work required under the contract violates this section. If a contract is awarded to a bidder who violates this section, the Owner may:

a. cancel the contract; or
b. after notice and a hearing, assess a penalty on the bidder in an amount that does not exceed ten (10) percent of the value of the subcontractor at issue.

**12. COMPARISONS AND EVALUATION OF BIDS**

This Invitation for Bid is prepared for a single general contract unless otherwise stated herein or on the Bid Form.

Before a bid is considered for award all bids will be compared and the lowest responsive and responsible bidder determined. The bidder may be requested by the Owner to supply information demonstrating the prospective contractors satisfactory record of timely performance, his ability and experience in performing comparable work, his business and technical organization, financial resources, plant available, and method of performing the Work, and whether he has ever been terminated on construction work. Failure of the bidder to promptly supply the information may be grounds for a determination of non-responsibility. All information supplied may not be disclosed without written consent of the bidder.

“Alaska Bidders” will be given a five (5) percent preference over non-resident bidders. An "Alaska Bidder" for purpose of bid award is a person who: a) holds a current Alaska Business License, b) submits a bid for goods or services under the name as appearing on his current Alaska Business License, c) has maintained a place of business within the state, staffed by the Bidder or an employee for a period of six months immediately preceding the date of his bid, d) is incorporated or qualified to do business under the laws of the state, e) if a proprietorship or partnership, all have to be resident, and f) if a joint venture, all ventures must qualify under a) through e).

Employment Program Preference: If a bidder qualifies as an "Alaska Bidder" and is offering services through an employment program as defined under AS.36.30.321 it will be given a fifteen (15) percent preference over a nonresident bidder.

Alaskans with Disabilities: If a Bidder qualifies as an Alaska Bidder and the Bidder is (1) a sole proprietorship owned by person with a disability, (2) a partnership where all partners have disabilities, (3) a limited liability corporation where all of the members have disabilities, or (4) a corporation wholly owned by individuals with disabilities, (5) a joint venture that is composed of ventures that qualify under (1)-(4), the Bidder is entitled to a ten (10) percent preference over other Alaska Bidders.

A Bidder may not claim more than one of the two disability related preferences listed above for the same bid. The State of Alaska Department of Labor and Workforce Development, Division of Vocational Rehabilitation maintains a list of qualified employment programs, and a list of individuals who qualify as persons with a disability. In order to claim either of these two preferences, the employment program or person must be on the respective list at the time the bid is opened, and a copy of a certification letter from the Division of Vocation Rehabilitation must be attached to the bid.

Alaska Veteran Preference: If a Bidder qualifies as an Alaska Bidder and the Bidder is a (1) sole proprietorship owned by an Alaska veteran, (2) a partnership where a majority of the partners are Alaska veterans, (3) a limited liability corporation where a majority of the members are Alaska veterans, or (4) a corporation wholly owned by individuals, and a majority of the individuals are

Alaska veterans, the Bidder is entitled to a five (5) percent preference over other Alaska Bidders. The preference may not exceed $5,000.

To qualify for the Employment Program, Disability or Veteran preferences in this section, a Bidder must add value by actually performing, controlling, managing, and supervising the services provided.

The University and regulations of the Department of Commerce provide a preference to be applied in the evaluation of a bid for the use of Alaska Products (AS.36.30.332), other than timber, lumber or manufactured lumber products, when Alaska Products are specified in an Invitation For Bid. When Alaska Products are specified for use in a project, the product and a quantity shall be stated on Alaska Products Preference Work Sheet (APPW) to the Bid Form. The quantity stated is an estimate used only in the evaluation of bids and may not necessarily be the exact quantity required. The bidder shall include in its bid the cost to provide, and shall provide the correct quantities under an awarded contract. A bid that designates the use of Alaska Products identified in the technical specifications and summarized on APPW and designated as Class I, Class II or Class III products as defined in the Procurement Code is decreased by the percentage of value, below, of the designated Alaska Product:

Class I product is given a three (3) percent preference
Class II product is given a five (5) percent preference
Class III product is given a seven (7) percent preference

Where non-brand named products are specified, Alaska Products may be used without approval prior to bid provided they meet the criteria and requirements of the project specifications. The owner will not review non-brand named products prior to bid; however they must be submitted for approval prior to use. The Bidder will be responsible for calculating the quantities and pricing required to complete the Alaska Products Worksheet, which must be submitted with its bid. If the preference, but its application, makes the bidder the apparent low bid and eventually the successful bidder, all other requirements for responsiveness, responsibility and specification compliance having been met, the Bidder shall provide the Owner, as it directs, evidence of the accuracy of its quantities and pricing. Allowing industry margins for waste cutting, if the Bidder's quantities and/or subsequent pricing are incorrect the imbalance shall be corrected, the preference reapplied and the bid reevaluated to determine the apparent low bid.

The bidder shall complete The Alaska Products Preference Work Sheet to the Bid Form and submit with its bid. Explanation and instruction for the bidders understanding and use are on the reverse side of the Work Sheet. Absence of APPW from the bid package will result in a determination that no Alaska Products preference is being claimed.

Notwithstanding the identification of an Alaska Product in the specifications of this project if the bidder desires to have an Alaska Product considered as an equal the procedures under Article 4 of the Instruction to Bidders shall be followed. An "Alaska Product" is defined in AS 36.30. It has been investigated and certified by the Department of Commerce and appears in their publication "Alaska Product Preference List" which may be obtained from the Department of Commerce and Economic Development, PO Box D, Juneau, Alaska 99811.

It is the Owner's intention to award and construct the maximum facility for which funds are available. Alternate bids, if called for, are intended to provide the Owner a range of comparative costs, which will allow identification of the combination most responsive to the Owner's needs and available funds. The bidder must submit bid prices for all alternate bids. Except as otherwise herein stated an apparent low bidder will be identified, and award of the contract will be made on the basis of the base bid plus those alternate bids that the Owner in its sole discretion elects to accept after application of the "Alaska Bidders" preference and an Alaska Products preference.

**13. CANCELLATION OF SOLICITATION; REJECTION OF BIDS**

The Owner may cancel this solicitation if it determines that it no longer requires the construction, or it can no longer reasonably expect to fund the project, or that there need to be major design revisions. The Owner also reserves the right to waive minor or immaterial defects or irregularities in a bid, or to reject any and all bids.

**14. MISTAKE IN BID**

Where a bidder claims to have made a mistake, such a mistake must be called to the attention of the Owner and documented with proof of evidential value within five calendar days after opening of bids. If a bidder clearly and convincingly demonstrates that a mistake other than a minor informality was made the bidder may withdraw the bid and the bid bond shall be returned. However, if the mistake is attributable to an error in judgment, the bidder forfeits the bid bond or other bid security.

If the Owner determines that it has made a material mistake in the Invitation for Bid before the contract has been awarded, it may correct the error if it determines that no competitive harm would result, or it may cancel the solicitation.

**15. PERIOD FOR ACCEPTANCE OF BIDS**

The bids shall remain valid for at least sixty (60) days after the opening date for submission of bids except as otherwise specified elsewhere in this solicitation.

**16. AWARD OF CONTRACT**

The lowest responsive and responsible bidder will be issued a Notice-of-Award, if at all, within 30 calendar days after the opening of bids, or within such extended period of time as agreed in writing between the Owner, the bidder concerned, and its surety.

The use of the term “days” shall refer to calendar days unless otherwise specified. The time in which to act is computed by excluding the day of the act, event, or notice and including the last day. If the last day of the prescribed deadline or time period falls on a Saturday, Sunday or other holiday when the University is closed, the deadline or time period will be extended until the end of the next day that the University is open for business.

**17. EXECUTION OF CONTRACT**

The contract must be signed by the bidder whose bid is identified as the apparent low bid and returned within ten (10) calendar days of the contractor's receipt of written Notice-of-Intent-to-Award-a-Contract, together with a payment bond and performance bond, on

forms provided by the Owner and certificates of insurance showing the different types, coverage and limits as required. Notice-of-Intent-to-Award-a-Contract does not create any obligation of the Owner to make a formal award nor does it constitute a notice to proceed with any of the work. The Notice-of-Intent-to-Award may be issued simultaneously with identification of low apparent bidder for purposes of obtaining a subcontractors list. The time requirements and non-responsive consequences apply as stated under Bid Opening of these Instructions to Bidders.

**18. FAILURE TO EXECUTE CONTRACT**

If the bidder to whom the Contract is awarded refuses or neglects to execute it, or fails to furnish the required contract security and proof of insurance within the time specified, the Owner may declare the Bidder non-responsive and the amount of his bid security may be retained by the Owner as liquidated damages.

**19. ALASKA FOREST PRODUCTS PREFERENCE**

The Bidder is advised that whenever timber, lumber, and manufactured lumber products are required in this Project, only products originating in this State from local forests shall be used wherever practicable. Refer to the General Conditions for the complete Alaska Forest Products requirements under this Contract.

**20. PRE-BID CONFERENCE**

At a time and place called out in the Notice of Invitation for Bid or by special notice, a pre-bid conference may be held. All prospective bidders are invited to attend the conference.

Conferees will be invited to comment on the bid documents or to raise questions, which may require explanation. If deemed necessary by the Owner, an addendum to the bid documents will be issued reflecting conclusions resulting from the conference.

The Owner, the principal consultants, and the architects of the project, will attend the conference together with all interested bidders.

END OF INSTRUCTIONS TO BIDDERS

# BID FORM FOR LUMP SUM CONTRACT

**PLACE**: Anchorage, Alaska

**DATE**: _____

**PROJECT**: **UAA RAS Weidner Classroom**

**PROJECT NO.:** **17-0033**
**BID NO.:** **17-06**
**BUILDING NAME:** **Rasmuson Hall**
**BUILDING NUMBER:** **AS105**

Bid of _____(hereinafter called the **Bidder**), a corporation, organized and existing under the laws of the State of _____ a partnership, or an individual doing business as _____ to the University of Alaska, Anchorage, Alaska (hereinafter called the **Owner**).

A. **Bidder**, in compliance with your invitation for bids for the construction of the Project indicated above, having examined the plans and specifications with the related documents and the site of the proposed work, and being familiar with all of the conditions surrounding the construction of the proposed Project, including the availability of materials and labor, hereby proposes to furnish all labor, materials, and supplies, and to construct the Project in accordance with the Contract Documents, within the time set forth therein, and for the price stated below.

B. The **Bidder** hereby agrees to commence work under the Contract on a date to be specified in the written Notice of Award of the **Owner** and to fully complete the Project within the time stipulated in the Contract Documents. The **Bidder** further agrees to pay all applicable liquidated damages in the sums, as set forth in the Contract Documents.

C. The **Bidder** acknowledges receipt of the following addenda:

ADDENDUM_____DATE_____

ADDENDUM_____DATE_____

ADDENDUM_____DATE_____

ADDENDUM_____DATE_____

ADDENDUM_____DATE_____

Bidder: _____

D. **BASE BID AMOUNT:**

_____Dollars ($_____)
(In Words) (In Figures)

E. **ADDITIVE/DEDUCTIVE ALTERNATES: NONE**

F. The **Bidder** understands that the **Owner** reserves the right to reject any or all bids and to waive any informality in the bidding.

Within Ten (10) days from date of written Notice-of-Intent-to-Award, the **Bidder** agrees to provide the required Insurance, Performance and Payment Bonds and execute the formal Agreement between **Owner** and Contractor. Bidder also agrees to provide a list of its subcontractors' names, addresses, specialty and Alaska Business License and Registration numbers by 5:00 P.M. on the fifth working day following receipt of written identification as APPARENT LOW BIDDER. Subcontractors must possess license and registration at time of bid opening.

G. THIS PROJECT IS SUBJECT TO THE EQUAL EMPLOYMENT OPPORTUNITY (EEO) REQUIREMENTS OF EXECUTIVE ORDERS 11246 AND 11625. THE BIDDER IS ADVISED THAT IN SIGNING THIS BID FORM HE IS MAKING CERTIFICATIONS REGARDING HIS EQUAL EMPLOYMENT OPPORTUNITY PRACTICES. SEE GENERAL CONDITIONS ARTICLE 49.

H. The undersigned hereby indicates its election regarding the following preferences:

Alaska Bidder Preference _____Claims Preference
_____Does Not Claim Preference

Alaskans with Disabilities Preference _____Claims Preference
_____Does Not Claim Preference

Alaska Veteran Preference _____Claims Preference
_____Does Not Claim Preference

Employment Program Preference _____Claims Preference
_____Does Not Claim Preference

If no election is made it will be determined the **Bidder** does not claim the preference.

If **Bidder** claims an "Alaska Products" preference he must complete Alaska Products Preference Work Sheet to this Bid Form. Failure of the **Bidder** to supply Alaska Products Preference Work Sheet at bid opening will result in an evaluation that no Alaska Products Preference is being claimed.

Alaska Products Preference: _____ Claims Preference(s)
_____ Does Not Claim Preference(s)

**Refer to Instructions to Bidders, Section 12 and AS.36.30.321 for criteria to qualify for the preferences**

I. The Bidder certifies that it possesses the following license and registration and submits the corresponding numbers as evidence.

Alaska Business License # _____

Contractor Registration (AS 8.18) #_____

Respectfully submitted,

_____
Print Name Clearly

Signed by: _____

Title: _____

(Seal if bid by Corporation)

Date: _____

Business Address:

_____

_____

Telephone: _____

Federal Tax I.D. No.:_____

Fax: _____

Email _____

This page intentionally left blank.

# BID BOND

KNOW ALL MEN BY THESE PRESENTS, that we, the undersigned,_____ _____ _____as Principal, and _____ _____ as Surety, are hereby held and firmly bound onto _____ _____ as Owner in the penal sum of _____ for the payment of which, well and truly to be made, we hereby jointly and severally, bind ourselves, our heirs, executors, administrators, successors, and assigns.

The condition of the above obligation is such that whereas the Principal has submitted to _____ _____ a certain Bid, attached hereto and hereby made a part hereof, to enter into a contract in writing for the _____

NOW, THEREFORE,

(a) If said Bid shall be rejected, or in the alternate,

(b) If said Bid shall be accepted and the Principal shall execute and deliver a contract in the Form of Contract attached hereto (properly completed in accordance with said Bid) and shall furnish a bond for his faithful performance of said contract, and for the payment of all persons performing labor or furnishing materials in connection therewith, and shall in all other respects perform the agreement created by the acceptance of said Bid then this obligation shall be void, otherwise the same shall remain in force and effect; it being expressly understood and agreed that the liability of the Surety for any and all claims hereunder shall in no event exceed the KM penal amount of this obligation as herein stated. The Surety, for value received, hereby stipulates and agrees that the obligations of said Surety and its bonds shall be in no way impaired or affected by any extension of the time within which the Owner may accept such Bid, and said Surety does hereby waive notice of any such extension.

IN WITNESS WHEREOF, The Principal and the Surety have hereunto set their hands and seals, and such of them as are corporations have caused their corporate seals to be hereto affixed and these presents to be signed by the proper officers, the day and year set forth below.

Signed this _____ day of_____, 2017

_____
Principal

_____
Surety

SEAL

By: _____

Form Approved August 1977 T.B.G.

# CONTRACT DOCUMENTS

## UAA RAS WEIDNER CLASSROOM

## PROJECT NO. 17-0033

This page intentionally left blank.

PO#_____

# AGREEMENT
# Between
# OWNER
# And
# CONTRACTOR

Date of Contract: _____

**THIS AGREEMENT** made by and between: **UNIVERSITY OF ALASKA**, Anchorage, Alaska, (hereinafter called "Owner"), and **_____,** (hereinafter called "Contractor").

The Owner and the Contractor agree as set forth below:

Article 1. Work

The Contractor shall perform all the Work required by the Contract Documents for the following project:

**UAA RAS WEIDNER CLASSROOM**
**PROJECT NO.: 17-0033**
**BID NO.: 17-06**
**BUILDING NAME: RASMUSON HALL**
**BUILDING NUMBER: AS105**

It is agreed that for and in consideration of the payments and agreements hereinafter mentioned, to be made and performed by the Owner or its assignee, the Contractor hereby agrees with the Owner to commence and complete the construction described as follows:

Supply and installation of the entire Work as contained in the proposal submitted, (hereinafter called the "Work"), at a cost not to exceed the proposal price and to furnish all the materials, supplies, machinery, equipment, superintendents, labor, insurance, and other accessories and services necessary to complete said Work in accordance with the conditions stated in the Contract Documents.

Article 2. Time of Commencement and Completion

Contractor hereby agrees to commence Work under this Agreement on a date to be specified in a written "Notice-of-Award" from the Owner and to complete the Work within the time stated in the Special Conditions.

**The Contract Completion Date is: August 15, 2017**

SAMPLE

Article 3. The Architect/Engineer for this project is:

Kumin Associates Inc.
808 E Street, Suite 200
Anchorage, Alaska 99501
Telephone: 907.272.8833

Article 4. Contract Sum

The Owner shall pay the Contractor under provisions of the Contract Documents for the performance of the Work, subject to additions and deductions by change order as provided in the Contract conditions, in current funds, the Contract Sum of _____ (_____). The attached bid sheets form an integral part of this Agreement.

Article 5. Contract Documents

5.1 The Contract Documents consist of this Agreement and documents listed hereinafter, (hereinafter called "Contract Documents"), and all are incorporated herein by reference and are as fully a part of the Contract as if attached to this Agreement or repeated herein.

Invitation for Bids
Instructions to Bidders
General Conditions
Special Conditions
University of Alaska Forms
Laborers' and Mechanics' Minimum Rates of Pay
Technical Specifications
Addendum Numbers X, X
Contractor's Bid Form
Notice of Award

5.2 In the event that any provision of one Contract Document conflicts with a provision of any other Contract Document, the provision of that Contract Document first listed shall govern, except as otherwise specifically stated:

a. This Agreement
b. Exhibits, attachments, etc. incorporated herein by reference.
c. Instructions to Bidders
d. The Special Conditions
e. Special written instructions to the Contractor, if any.
f. The General Conditions
g. Manufacturer's instructions with reference to approved materials.
h. The Technical Specifications.
i. The Contract Drawings

This Agreement and all covenants hereof shall inure to the benefit of and be binding upon the Owner and the Contractor, respectively, and their partners, successors, assigns, and legal representatives.

SAMPLE

Article 6. Progress and Final Payments

6.1 Payment shall be made to the Contractor by the Owner, or his assigns, based upon amount of the approved Contractor's estimate of Work completed and value of materials suitably stored on site up to last day of month less any retainer required by the Owner in accordance with General Conditions Article No. 35.

6.2 Final payment, constituting the final unpaid balance of the contract sum, including retainer, shall be paid by the Owner, or his assigns to the Contractor. Final payment shall be due to the Contractor within thirty (30) days after receipt of this Contractor's Work by the Owner.

Article 7. Miscellaneous

7.1 Any notice of communication which either party desires to give the other party which affects the contract sum of this Agreement shall be given in writing, and either shall be personally delivered to the other party's representative or deposited in the United States mail as registered mail with all postage prepaid, and if given by the Contractor to the Owner, then addressed as follows:

University of Alaska Anchorage
Facilities Planning and Construction
Attention: Kim Mahoney, Director
3890 University Lake Drive, Suite 110
Anchorage, AK 99508-4669

Telephone: 907.786.4900
Fax: 907.786.4901

uaa_fpc@alaska.edu

If given by the Owner to the Contractor, then addressed as follows:

_____ Telephone: _____

_____ Fax: _____

_____ Email: _____

SAMPLE

**IN WITNESS WHEREOF,** the parties have made and executed this Agreement to be effective the day and year first above written.

_____**, Contractor**

By: _____
Name & Title

_____
Date

Tax ID: _____

**UNIVERSITY OF ALASKA, Owner**

All Required BOR Approvals obtained.

By: _____
Patricia Baum, Project Manager Date
UAA Facilities Planning & Construction

Funding obtained by:

_____
UAA FP&C Fiscal Manager Date

Approved By:

_____
UAA Contracting Officer Date

Approved By:

_____
Kim Mahoney, Director Date
UAA Facilities Planning & Construction

SAMPLE

# PERFORMANCE BOND

**KNOW ALL MEN BY THESE PRESENTS** that we (1) _____ a (2) hereinafter called "Principal" and (3) _____ of_____, State of _____ hereinafter called the "Surety", are held and firmly bound onto (4)_____ of _____, hereinafter called "Owner", in the penal sum of _____ Dollars ($_____) in lawful money of the United States, for the payment of which sum well and truly to be made, we bind ourselves, our heirs, executors, administrators and successors, jointly and severally, firmly by these presents.

**THE CONDITION OF THIS OBLIGATION** is such that Whereas, the Principal entered into a certain contract with the Owner, dated the_____ day of _____, 2017, a copy of which is hereto attached and made a part hereof for the construction of:

_____

_____

_____

_____

NOW THEREFORE, if the Principal shall well, truly and faithfully perform its duties, all the undertakings covenants, terms conditions, and agreements of said contract during the original term thereof, and any extensions thereof which may be granted by the Owner, with or without notice to the Surety, and if he shall satisfy all claims and demands incurred under such contract, and shall fully indemnify and save harmless the Owner from all costs and damages which it may suffer by reason of failure to do so, and shall reimburse and repay the Owner all outlay and expense which the Owner may incur in making good any default, then this obligation shall be void; otherwise to remain in full force and effect.

PROVIDED, FURTHER, that the said Surety, for value received hereby stipulates and agrees that no change, extension of time, alteration or addition to the terms of the contract or to the work to be performed there under or the specifications accompanying the same shall in any way affect its obligation on this bond, and it does hereby waive notice of any such change, extension of time, alteration or addition to the terms of the contract or to the work or to the specifications.

PROVIDED FURTHER, that no final settlement between the Owner and the Contractor shall abridge the right of any beneficiary hereunder, whose claim may be unsatisfied.

**IN WITNESS WHEREOF**, this instrument is executed in two (2) counterparts, each one of which shall be deemed an original, this the_____ day of _____, 2017.

ATTEST:

_____
Principal

_____
(Principal) Secretary

By_____(5)

SEAL

_____
Address

_____
Witness as to Principal

_____
Address

_____
Surety

ATTEST:

_____
(Surety) Secretary

By_____
Attorney-in Fact

(SEAL)

_____
Witness as to Surety

_____
Address

_____
Address

NOTE: Date of Bond must not be prior to date of Contract
(1) Correct name of Contractor
(2) A Corporation, a Partnership, or an Individual, as case may be
(3) Correct name of Surety
(4) Correct name of Owner
(5) If Contractor is Partnership, all partners should execute bond

# PAYMENT BOND

KNOW ALL MEN BY THESE PRESENTS: That we (1) _____a (2) _____and hereinafter called "Principal" and (3) _____of _____, State of _____ hereinafter called "Surety" are held and firmly bound on to (4) _____, hereinafter called "Owner", in the penal sum of _____ Dollars ($ _____) in lawful money of the United States, for the payment of which sum well and truly to be made, as we bind ourselves, our heirs, executors, administrators and successors, jointly and severally, firmly by these presents.

THE CONDITION OF THIS OBLIGATION is such that whereas, the Principal entered into a certain contract with the Owner, dated the _____ day of _____, 2017, a copy of which is hereto attached and made a part hereof for the construction of:

_____

_____

_____

NOW, THEREFORE, if the Principal shall promptly make payment to all persons, firms, subcontractors, and corporations furnishing materials for or performing labor in the prosecution of the Work provided for in such contract, and any authorization extension or modification thereof, including all amounts due for materials, lubricants, oil, gasoline, coal and coke, repairs on machinery, equipment and tools, consumed or used in connection with the construction of such Work, and all insurance premiums on said Work, and for all labor, performed in such Work whether by subcontractor or otherwise, then this obligation shall be void; otherwise to remain in full force and effect.

PROVIDED, FURTHER, that the said surety, for value received hereby stipulates and agrees that no change, extension of time, alteration or addition to the terms of the contract or to the Work to be performed thereunder or the specifications accompanying the same shall in any way affect its obligation on this bond, and it does hereby waive notice of any such change, extension of time, alteration or addition to the terms of the contract or to the work or to the specifications.

PROVIDED, FURTHER, that no final settlement between the Owner and the Contractor shall abridge the right of any beneficiary hereunder, whose claim may be unsatisfied.

IN WITNESS WHEREOF, this instrument is executed in two (2) counterparts, each one of which shall be deemed an original, this the ____ day of _____, 2017.

**ATTEST:**

_____
Principal

_____
(Principal) Secretary

By _____(5)

_____
(Address)

(SEAL)

_____
Witness as to Principal

_____
(Address)

_____
Surety

**ATTEST:**

_____
(Surety) Secretary

_____
Attorney-in Fact

_____
Address

(SEAL)

_____
Witness as to Surety

_____
Address

NOTE: Date of Bond must not be prior to date of Contract.

(1) correct name of Contractor
(2) a Corporation, a Partnership, or an Individual, as case may be
(3) correct name of Surety
(4) correct name of Owner
(5) if Contractor is Partnership, all partners should execute bond

# Alaska Product Preference Program

http://commerce.alaska.gov/dnn/ded/dev/AlaskaProductPreferenceProgram.aspx

**ALASKA PRODUCTS PREFERENCE WORKSHEET**

Project Name:_____ Contractor: _____

Project No.: _____

Bid No.: _____ Bid Item: _____

(Base, Alternate, Schedule, Etc.)

| Product & Specification Reference | Manufacturer | Product Class (%) | Estimated Quantity | Unit Price | Total Declared Value | Applied Preference (% Times Total Cost) |
|---|---|---|---|---|---|---|
| | | | | | | |
| | | | | | | |
| | | | | | | |
| | | | | | | |
| | | | | | | |
| | | | | | | |
| | | | | | | |
| | | | | | | |
| | | | | | | |
| | | | | | | |
| | | | | | | |
| | | | | | | |
| | | | | | | |
| | | | | | | |
| Page _____ of _____ Total Preference Claimed on Above Bid Item **(See Instructions Attached)** | | | | | | $ |

# INSTRUCTIONS FOR ALASKA PRODUCTS PREFERENCE WORKSHEET

Special Notice: All procurement, except those funded from Federal sources, shall contain Contract provisions for the preference of Alaska products. The products listed by the Bidder on this worksheet have been selected for the reference project form the "Alaska Products Preference List" which was in force 30 days prior to the advertisement date of this contract. Bidders may obtain a copy of the appropriate listing "Alaska Preference List" by contacting their local DCED office or writing: Dept. of Commerce & Economic Development, Alaska Products Preference Listing, P.O. Box D, Juneau, Alaska 99811.

BIDDERS INSTRUCTIONS:

A. GENERAL: The contracting Agency may request documentation to support entries made on this form. False presentations may be subject to AS 36.30.687. All Bidders' entries must conform to the requirements covering bid preparations in general. Discrepancies in price extensions shall be resolved by multiplying the declared total value times the preference percentage and adjusting any resulting computation(s) accordingly.

B. BASE BID (form completion)

1) Enter project name and number and bid number, the words "Base Bid" and the Contractor's name in the heading of each page as provided.

2) The Bidder shall compare those candidate products appearing on the preference listing (see Special Notice comments above) against the requirements of the technical specifications appearing in the contract documents. If the Bidder determines that a candidate product can suitably meet the contract requirements, then that product may be included in the worksheet as follows:

3) For each suitable product submitted under the "Base Bid" enter:
- the product name, generic description and its corresponding technical specification section number under the heading "PRODUCT & SPECIFICATION REFERENCE",
- the company name of the Alaska producer under the heading "MANUFACTURER", and
- the product class (I, II, or III) and preference percentage (3, 5, or 7% respectively) under the Product Class (%).

4) For each product appearing on the list and to be utilized by the CONTRACTOR enter:
- under the heading "ESTIMATED QUANTITY". The bidders estimated quantity of the product
- under the heading "UNIT PRICE", the manufacturer's quoted unit price of the products

under the heading "TOTAL DECLARED VALUE" the extension of "Estimated Quantity" times the manufacturer's quoted "Unit Price",
- (caution: this value is to be the manufacturer's quoted price at the place of origin and shall not include costs for freight, handling or miscellaneous charge of incorporating the product into the work,) and
- the resulting preference - i.e. the preference percentage times the total declared value amount - under the heading "APPLIED PREFERENCE".

5) Continue for all "suitable" base bid products. If the listing exceeds one page enter the words "SUB" in front of the work "TOTAL" and on the first entry line of the following pages enter "SUBTOTAL OF APPLIED PREFERENCE FROM PREVIOUS PAGE".

6) On the final page of the listing enter "BASE BID PREFERENCE GRAND" immediately before the word "TOTAL".

7) Total the entries in the "APPLIED PREFERENCE" column for each page by commencing at the first entry for that page. If a continuation page exists, ensure that the subtotal from the previous page is computed into the running total. Number pages as appropriate.

8) Compute a Grand Total for the Base Bid Preference. Enter this amount on the final page of the worksheet. (Note: On formally bid contracts this amount should also be entered on the Bid Form. Submit worksheet(s) with the Bid.

C. ALTERNATE BIDS (form completion)

1) Enter project name and number and bid number, the words "Alternate Bid #___", and the Contractor's name in the heading of each page as provided.

2) On the first entry line enter "ADDITIONAL ALASKA PRODUCTS FOR ALTERNATE BID #___", and repeat procedures 2 through 5 under part B these Bidder's instruction except that references to "Base Bid" shall be replaced with the words "Alternate Bid # ___."

3) Following the listing of all additional Alaska products enter the words "ADDITIONAL PRODUCTS PREFERENCE FOR ALTERNATE BID #___ - SUBTOTAL" and enter a subtotal amount for all additional products as listed. Subtotal amount to be determined by adding all <u>additional product</u> entries in the "APPLIED PREFERENCE" column.

4) Skip three lines and enter "LESS THE FOLLOWING NON-APPLICABLE ALASKA PRODUCTS".

5) Beginning on the next line, enter the product name and manufacturer of each Alaska Product appearing on the "Base Bid" listing which would be deleted or reduced from the Project should the "Alternate Bid" be selected. Details of entry need only be sufficient to clearly reference the subject product. (i.e. "Prehung doors by Alaska Door Co., " in lieu of "Prehung Solid Core Wood Door, model "Super Door", Section 08210, by Alaska Door Co., Anchorage") Products being reduced shall specify the amount of the reduction. Should no products require deletion enter "None". When a product is listed as a "NONAPPLICABLE ALASKA PRODUCT" for this alternate bid and if under the basic bid the Bidder received a preference eon this basic bid as a result of that product, then the applicable entries under the heading "TOTAL DECLARED VALUE" and "APPLIED PREFERENCE" (for each product and from the base bid listing) shall also be entered into the corresponding heading of this form. Where only a portion of the products has been deleted, the entry (which will differ from those on the base bid listing) may be "pro-rated" or as otherwise substantiated.

6) Following the listing of all non-applicable Alaska products enter the words "NON APPLICABLE PRODUCTS PREFERENCE FROM BASE BID --SUBTOTAL" and enter a subtotal amount for all non-applicable products as listed. Subtotal amount to be determined by adding all <u>non-applicable</u> entries in the "APPLIED PREFERENCE" column.

7) At the bottom of the final page enter the words "ALTERNATE BID" # ___ PREFERENCE GRAND" immediately before the work 'TOTAL".

8) Compute a grand total for the alternate bid preference (for alternate #___) by subtracting the non-applicable product preference subtotal from the additional product preference subtotal. Enter on the final page. (Note: On formally bid contracts this amount should also be entered on the alternate bid form. Submit separate worksheet(s) with each alternate bid.

This page intentionally left blank.

# Table of Contents

## UAA Forms List

1. Alternate Brand Request (2 pages)
2. Certificate of Insurance
3. Certificate of Substantial Completion
4. Consent of Surety to Final Payment
5. Contract Price Breakdown & Commencement & Completion Dates
6. Request for Information (RFI)
7. Notice of Warranty Deficiency
8. Periodic Estimate for Partial Payment (2 pages)
9. Proposed Substitution Request
10. Contract Modification Proposal and Acceptance (2 pages)
11. Release on Contract (General Contractor)
12. Substitution Request (After Award) (2 pages)
13. Submittal Summary Sheet
14. Shop Drawing/Submittal Log Sheet
15. Transmittal of Submittals
16. Waiver of Lien Rights and Indemnification ( General Contractor)
17. Waiver of Lien Rights and Indemnification (Subcontractor)
18. O & M Data Sheet
19. W-9

This page intentionally left blank.

# ALTERNATE BRAND
# REQUEST FOR CONSIDERATION

Facilities Planning and Construction
3890 University Lake Drive, Suite 110
Anchorage, Alaska 99058-4669

University of Alaska Anchorage
Instructions to Bidders Article 4
General Condition Article 16

From: Date: _____

Project: _____

We hereby submit for your consideration the following alternate brand product on the above project:

| Section | Paragraph | Drawing No. | Specified Item |
|---|---|---|---|
| _____ | | _____ | _____ |

1. Proposed alternate brand: _____

2. Describe briefly the reason for the proposed alternate brand: _____

3. Attach complete technical data, including laboratory test, if applicable. Include complete information on changes to contract documents which proposed alternate brand requires for its proper installation. Submit with request all necessary samples and substantiating data to show equal quality and performance to that which is specified. Clearly mark manufacturer's literature to indicate equality in performance. See Instruction To Bidders Article 4 and General Conditions Article 16 for additional information.

4. Fill in the blanks below:
   a. Does the alternate brand cause changes to the drawings? _____

      If "yes", clearly indicate changes: _____

   b. Will the undersigned pay for changes to the drawings, including engineering and detailing costs caused by the requested alternate brand?

      _____
      (Answer "yes" or "no".)

   c. What effect does the alternate brand have on other trades? _____

   d. Differences between proposed alternate brand and specified item? _____

5. Manufacturer's guarantees of the proposed item(s) are attached:

   Explain the differences between guarantees of the proposed and specified item(s).

   _____

# ALTERNATE BRAND
# REQUEST FOR CONSIDERATION

6. Discuss how the function, appearance, and quality of the proposed alternate brand compares with the specified item.

_____

I hereby certify that the foregoing statements are true and correct to the best of my knowledge:

_____

Signature Title Date

_____

Firm or Company Name Address Telephone Number

Signature must be by person having authority to legally bind his firm to the above terms, 1 through 6, including attachments. Failure to provide legally binding signature will result in retraction of acceptance.

---

For Use by Design Consultant

Accepted _____ Not Accepted _____ Accepted as Noted _____

Remarks:

_____

_____

Signature Date _____

---

University of Alaska Anchorage

Received Too Late _____ Accepted _____ Not Accepted _____

Project Manager's Signature Date _____

END OF DOCUMENT

**CERTIFICATE OF INSURANCE FOR ALL COVERAGES**
**UNIVERSITY OF ALASKA**
**FACILITIES PLANNING & CONSTRUCTION**

| Northern Region | South Central Region | Southeast Region |
|---|---|---|
| 910Yukon Drive, Fairbanks, AK 99775 | 3890 University Lake Drive, Suite 110, Anchorage, AK 99508 | PO Box 210049, Auke Bay, Alaska 99821 |

This is to certify that the policies listed in this certificate have been issued to the named insured by the insurer for the policy term and with the provisions designated hereon and in compliance with the insurance and indemnification requirements of the contract.

| | |
|---|---|
| Name of Address of the Insured | Name and Address of Agent: |
| Name and Address of Companies Affording Coverage<br>Company Letter A | This certificate is issued as a matter of information only and confers no rights upon the certificate holder. This certificate does not amend, extend, or alter the coverage afforded by the policies below, except as noted below. |
| Company Letter B | Premises or Operations Covered: |
| Company Letter C | |
| Company Letter D | |

| Company Letter | Type of Insurance | Policy Number | Policy Expiration Date | All Limits in Thousands | |
|---|---|---|---|---|---|
| | GENERAL LIABILITY<br>✐ Commercial General<br>✐ Premises – Operation<br>✐ XCU<br>✐ Broad From Property Damage<br>✐ Contractual Liability<br>✐ Occurrence or ✐ Claim Made<br>✐ Products/Completed Operations<br>✐ Owner's/Contract's Protective Liability | | | General Aggregate<br>Products-Comp/OpsAggregate<br>Personal & Advertising Injury<br>Each Occurrence<br>Fire Damage (any one fire)<br>Medical Expense (any one person | $ _____<br>$_____<br>$_____<br>$_____<br>$_____<br>$_____ |
| | AUTOMOBILE LIABILITY<br>✐ Owned<br>✐ Hired<br>✐ Non-owned | | | CSL<br>Bodily Injury (per person)<br>Bodily Injury (per accident)<br>Property Damage | |
| | EXCESS LIABILITY<br>✐ Umbrella Form<br>✐ Other Than Umbrella Form | | | Bodily Injury & Property Damages Combined | |
| | WORKER'S COMPENSATION AND EMPLOYER'S LIABILITY<br>✐ All States Coverage | | | Statutory<br>$ _____ (each accident)<br>$_____ (disease-policy limit)<br>$ _____ (disease-each employee) | |
| | PROFESSIONAL LIABILITY<br>(If Applicable)<br>✐ 3 years Extension of Coverage | | | | |
| | OTHER<br>✐ ARBR with Flood & Earthquake | | | | |

ADDITIONAL INSURED: The University of Alaska is an additional insured on all policies; except Professional Liability and Worker's Compensation. WAIVER OF SUBROGATION is granted for University of Alaska as respects General Liability, Auto Liability, and Worker's Compensation. All policies are in effect at this time and will not be cancelled, until after 30 days written notice has been given to the certificate holder named above, addressed to the appropriate region, to the attention of the Director, Facilities Project Services.

_____ _____
Signed Authorized Representative Date

This page intentionally left blank.

# CERTIFICATE OF SUBSTANTIAL COMPLETION

Project Name: _____ Contract Authorization No: _____

Contractor: _____ Contract Date: _____

Date of Issuance: _____

Owner: UNIVERSITY OF ALASKA
FACILITIES PLANNING AND CONSTRUCTION
3890 University Lake Drive, Suite 110
Anchorage, AK 99508-4669

Project Shall Include:
_____

The work performed under this contract has been reviewed and found to be substantially complete. The date of Substantial Completion is hereby established as _____

DEFINITION OF DATE OF SUBSTANTIAL COMPLETION:

The date of substantial completion of the project is the date certified by the owner when the work is substantially complete, in accordance with, and defined in the contract documents.

A list of items to be completed or corrected, prepared by the owner and verified an amended by the architect is appended hereto. The failure to include any items or such list does not alter the responsibility of the contractor to complete the project in accordance with the contract documents.

Architect: _____ By: _____ Date: _____

The contractor will complete or correct the work on the list of items appended hereto within 30 days from the date of substantial completion.

Contractor: _____ By: _____ Date: _____

The responsibilities of the owner and the contractor for maintenance, heat, utilities, and insurance shall be as follows:

_____

In reliance upon the certification of the contractor and the architect, the owner hereby accepts the project as substantially complete. In accordance with the contract documents, the owner hereby elects, | | NOT TO; | | TO; assume occupancy at _____PM (time) on _____ (date).

Owner: **UNIVERSITY OF ALASKA** By: _____ Date: _____

cc: Contractor's GGL & Property Insurance Carrier (no attachment)
Vice Chancellor of Administration (with attachment)
Director, Risk Management (no attachment)

This page intentionally left blank.

# CONSENT OF SURETY COMPANY TO FINAL PAYMENT

Project: _____ No.:_____

TO: Contract Date:_____

OWNER:
University of Alaska
Facilities Planning and Construction
3890 University Lake Drive, Suite 110
Anchorage, AK 99508-4669

CONTRACTOR:

In accordance with the provision of the Contract between Owner and the Contractor as indicated above, the

_____
Surety Company

on bond of Contractor

HEREBY APPROVES OF THE FINAL PAYMENT to the Contractor, and agrees that final payment to the Contractor shall not relieve the Surety Company of any of its obligations to

UNIVERSITY OF ALASKA, OWNER

as set forth in the said Surety Company's bond. Surety expressly agrees that any and all valid claims of subcontractors and all persons supplying labor or materials to the project will be satisfied by Contractor or Surety in a timely manner.

IN WITNESS WHEREOF, the Surety Company has hereunto set its hand this _____ day of

_____, year _____.

_____
Surety Company

Attest:_____

_____
Signature of Authorized Representative

Title: _____

This page intentionally left blank.

# UNIVERSITY OF ALASKA
# CONTRACT PRICE BREAKDOWN AND COMMENCEMENT AND COMPLETION DATES

Name and Location of Project: _____ Project No._____

Name of Contractor: _____Architect:_____

Date of Award: _____Completion:_____Total Amount of Contract:_____

| 1 | 2 | 3 | 4 | 5 | 6 | 7 |
|---|---|---|---|---|---|---|
| Item | Description | Quantity | Unit | Amount | Date of Commencement | Date of Completion |
| | | | | | | |
| | | | Total | | | |

This page intentionally left blank.

| REQUEST FOR INFORMATION/CLARIFICATION | |
|---|---|

Project:

**Discipline:**

- ☐ Civil
- ☐ Landscape
- ☐ Structural
- ☐ Architectural
- ☐ Mechanical - HVAC
- ☐ Mechanical - Plumbing
- ☐ Electrical
- ☐ Fire Protection
- ☐ Laboratory

**References:**

| | |
|---|---|
| Drawings: | |
| Specifications: | |
| Attachments: | |
| May have schedule or cost impact | ☐ |

Subject:

**Requested By:** Date:

| Sub/Supplier (name/company/phone): | Sub/Supplier RFI #: |
|---|---|
| | |

**Owner Response.**

Signature: _____ Company: _____ Date:

This page intentionally left blank.

**UNIVERSITY OF ALASKA**

**NOTICE OF WARRANTY DEFICIENCY** NO. _____

A. TO: _____
_____
_____

FROM: Director, Facilities Planning & Construction
University of Alaska
3890 University Lake Drive, Suite 110
Anchorage, AK 99508-4669

DATE: _____

RE:. _____

The deficiency described under Section B below (is) (is not) subject to remedy under _____ _____ of the construction contract dated _____.
Please take immediate action to restore the deficient item to specification status. Return both copies of this notice with Section C completed as acknowledgement. Upon acceptance of the work performed, one copy will be returned to you.

By _____

**********

**DEFICIENCY REPORT**

B. LOCATION _____ _____ _____
Building Floor Room

EQUIPMENT _____ _____ _____
Description Serial No. Univ. No.

OTHER _____

DATE IF ACCEPTANCE _____

NATURE OF DEFICIENCY _____

_____

_____

Reported by _____ Date _____

**********

**STATEMENT OF CORRECTIVE ACTION**

C. Notice Received By _____ Date _____

Deficiency Corrected _____

Other Comments _____

_____

_____

Signed _____ _____
For the Contractor Date

Accepted _____ _____
For the University Date

This page intentionally left blank.

Project: ______________________ Project #: __________

Contractor: ______________________ Contract #: __________

Contractor Address: ______________________ Date: __________

Pay Estimate No.: ________ Period from: **date** to **date**

**1. Original Contract** (work & cost data under Change Orders shown in Part 2.)

| Item # | ***Do not make entry or change formulas in shaded cells.*** Description of Item | Original Contract | | | Completed to Date | | | Cost of Uncompleted Work |
|---|---|---|---|---|---|---|---|---|
| | | Quantity | Unit Cost | Item Cost | Quantity | Cost | % Complete | |
| | | | | | | | | |
| | | | | | | | | |
| | | | | | | | | |
| | | | | | | | | |
| | | | | | | | | |
| | | | | | | | | |
| | | | | | | | | |
| | | | | | | | | |
| | | | | | | | | |
| | | | | | | | | |
| | | | | | | | | |
| | | | | | | | | |
| | | | | | | | | |
| | | | | | | | | |
| | | | | | | | | |
| | | | | | | | | |
| | | | | | | | | |
| | | | | | | | | |
| | | | | | | | | |
| | | | | | | | | |
| | | | | | | | | |
| | | | | | | | | |
| | | | | | | | | |
| | | | | | | | | |
| | | | | | | | | |
| | | | | | | | | |
| | | | | | | | | |
| | | | | | | | | |
| | | | | | | | | |
| | | | | | | | | |
| | | | | | | | | |
| | | | | | | | | |
| | | | | | | | | |
| | | | | | | | | |
| | | | | | | | | |
| | | | | | | | | |
| | | | | | | | | |
| | | | | | | | | |
| | | | | | | | | |
| | | | | | | | | |
| | | | | | | | | |
| | | | | | | | | |
| | | | | | | | | |
| | | | | | | | | |
| | | | | | | | | |
| | | | | | | | | |
| | | **Totals:** | | (A) | | (B) | | (C) |

PART 2 - Periodic Estimate for Partial Payment

**2. Change Orders** (list every executed Change Order issued to date of this request, even if no work has been completed to date.)

***Do not make entry or change formulas in shaded cells.***

| No. | Date | Description | Additions to Contract Price | | | Deductions from Contract Price (enter as negative) |
|---|---|---|---|---|---|---|
| | | | Total | Completed to Date % | Completed to Date Amount | |
| | | | | | | |
| | | | | | | |
| | | | | | | |
| | | | | | | |
| | | | | | | |
| | | | | | | |
| | | | | | | |
| | | | | | | |
| | | | | | | |
| | | | | | | |
| | | **TOTALS:** | (D) | | (E) | (F) |

**3. Analysis of Adjusted Contract Amount to Date**

a. Original contract amount (Total A)
b. Plus: Additions scheduled (Total D)
c. Less: Deductions scheduled (Total F)
d. Adjusted contract amount to date (3a + 3b + 3c)

**4. Analysis of Work Performed**

a. Cost of original contract work performed to date (Total B)
b. Extra work performed to date (Total (E) + Total (F))
c. Cost of work performed to date (4a + 4b)
d. Less: Value of Owner-furnished materials [ Page 1, Item(s) No. _____ ]
e. Add: Materials stored at close of this period (Attach detailed schedule)
f. Total cost of work performed to date (4c - 4d + 4e)
g. Less: Amount retained in accordance with contract terms (enter %) →
h. Net amount earned on contract work to date (4f - 4g)
i. Less: Amount of previous payments
j. **BALANCE DUE THIS PAYMENT** (4h – 4i)

**5. Certification of Contractor**

According to the best of my knowledge and belief, I certify that all items and amounts shown on the face of this Periodic Estimate for Partial Payment are correct; that all work has been performed and/or material supplied in full accordance with the requirements of the referenced Contract, and/or duly authorized deviations, substitutions, alterations, and/or additions; that the foregoing is a true and correct statement of the Contract account up to and including the last day of the period covered by this Periodic Estimate; that no part of the "Balance Due This Payment" has been received, and that the undersigned and his/her subcontractors have - (check applicable line):

a. _____ Complied with all of the labor provisions of said contract.

b. _____ Complied with all of the labor provisions of said Contract except in those instances where an honest dispute exists with respect to said labor provisions. (If b. is checked, describe briefly the nature of the dispute.)

Contractor

Signature of Authorized Representative

Date

Title

**6. Certification of Architect or Engineer - UAA Project Manager to Initial Selection Required _____ Not Required _____**

I certify that I have checked and verified the above and foregoing Periodic Estimate for Partial Payment; that to the best of my knowledge and belief it is a true and correct statement of work performed and/or material supplied by the Contractor; that all work and/or material included in this Periodic Estimate has been inspected by me and/or by my duly authorized representative or assistants and that it has been performed and/or supplied in full accordance with requirements of the referenced Contract, and that partial payment claimed and requested by the Contractor is computed correctly on the basis of work performed and/or material supplied to date.

Signature of Architect or Engineer

Title

Bid Date:_____

Last Day to Accept Requests:_____

## PROPOSED SUBSTITUTION REQUESTS (Project)

| No. | Proposed Substitution Contractor | Specific Reference | Date Rcvd & Where | AK.P | Action/Date to Consult. | Date Return Requested | Date Returned | Accepted | Not Accepted | Letter Sent Date | Comments |
|---|---|---|---|---|---|---|---|---|---|---|---|
| | | | | | | | | | | | |
| | | | | | | | | | | | |
| | | | | | | | | | | | |
| | | | | | | | | | | | |
| | | | | | | | | | | | |
| | | | | | | | | | | | |
| | | | | | | | | | | | |
| | | | | | | | | | | | |

This page intentionally left blank.

Facilities Planning & Construction
UNIVERSITY of ALASKA ANCHORAGE

**CONTRACT MODIFICATION PROPOSAL & ACCEPTANCE**
**3890 University Lake Drive, Suite 110, Anchorage, AK 99508**
**907.786.4900 (v) - 907.786.4901 (f)**

| | | |
|---|---|---|
| **1. ISSUING AUTHORITY**<br>**University of Alaska** | **2. PROJECT NO.**<br>XX-XXXX | **3. MODIFICATION NO.:** **01**<br>**PURCHASE ORDER NO.:**<br>**ACTIVITY CODE:** |
| **4. TO:** <Contractor Name><br><Address> | **5. PROJECT DESCRIPTION AND LOCATION:**<br><Project Title><br>, Alaska | |

6. A proposal is requested for making the hereinafter described change in accordance with specification and drawing revisions cited herein or listed in attachment hereto. Submit your proposal in space indicated on Page 2, including detail breakdown of prime and subcontract costs (see General Conditions, Article 46, Price Adjustments). DO NOT start work under this proposed change until you receive a copy signed by the University of Alaska or a directive to proceed.

| Date | XXXXXXX, Project Manager<br>Name and Title | Signature |
|---|---|---|

**7. DESCRIPTION OF CHANGE**: Pursuant to the article of this contract entitled "changes" the Contractor shall furnish all plant, labor and material, and perform all work necessary to accomplish the following described work:

**See Page 2 for Description of Change**

For the above change, the sum of **$00,000.00** is hereby **ADDED OR DEDUCTED** to the total contract price.
**The Contract Completion date, as a result of this modification, remains unchanged or will change to 12/31/2016.**
The Contractor hereby accepts the foregoing adjustment as a final and complete equitable adjustment in full accord and satisfaction of all past, present, and future liability originating under any article in the Contract by reason of the facts and circumstances giving rise to this Modification.

Except as hereby modified, all terms and conditions of said Contract as heretofore modified remain unchanged and in full force and effect.

**THE FOREGOING MODIFICATION(S) IS HEREBY ACCEPTED.**

CONTRACTOR:
<Contractor Name>

Signed by: <Name & Title> Date

All Required BOR Approvals Obtained

xxxxxxxxxxxxx, Project Manager Date

Funding Obtained By

FP&C Fiscal Manager Date

**APPROVED BY**

UAA Contracting Officer Date

John Faunce, Director, FP&C Date

| **CONTRACT SUMMARY** | | | **CURRENT COMPLETION DATE:** | | **June 30, 2016** |
|---|---|---|---|---|---|
| ORIGINAL CONTRACT SUM | $ | 0.00 | PREVIOUS TOTAL | $ | 0.00 |
| PREVIOUS ADDITIONS | $ | 0.00 | THIS CHANGE (ADD) | $ | **0.00** |
| PREVIOUS DEDUCTIONS | $ | 0.00 | NEW CONTRACT TOTAL | $ | **0.00** |

Sample

Facilities Planning & Construction
UNIVERSITY of ALASKA ANCHORAGE

**CONTRACT MODIFICATION PROPOSAL & ACCEPTANCE**

**3890 University Lake Drive, Suite 110, Anchorage, AK 99508**



| | | |
|---|---|---|
| **1. ISSUING AUTHORITY**<br>**University of Alaska** | **2. CONTRACT**<br>XX-XXXX | **3. MODIFICATION NO.:** **01**<br>**PURCHASE ORDER NO.:** **0**<br>**ACTIVITY CODE:** **0** |
| **4. TO:** <Contractor Name><br><Address><br>0 | **5. PROJECT LOCATION AND DESCRIPTION:**<br><Project Title><br>, Alaska | |

**7. DESCRIPTION OF CHANGE: continued….**

Sample

# RELEASE ON CONTRACT
## University of Alaska Anchorage

WHEREAS, by the terms of a contract dated _____ entered into by the University of Alaska, and _____ for the construction of _____ it is provided that:

"Neither the final payment nor the remaining retained percentage shall become due until the Contractor shall provide the Owner (1) with a waiver and release of liens, on the forms provided by the Owner, executed by the Contractor…"

NOW THEREFORE, in consideration of the premises and the payment by the University of Alaska to the undersigned Contractor of the amounts due under the contract and any changes or modifications thereto, to wit, the sum of _____, the undersigned Contractor hereby releases and forever discharges the University of Alaska including its property, particularly that real property known as the _____ of the University of Alaska, of and from all manner of debts, dues and sum or sums of money, accounts, claims, and demands whatsoever, in Law and in equity, under or by virtue of said contract, and warrants good title to all material, supplies and equipment installed or incorporated in the project and all work delivered to the premises, together with all improvements and appurtenances constructed thereon by _____ to the University of Alaska free of any claims, liens or encumbrances and that neither the undersigned nor any person, firm or corporation furnishing material or labor for any work covered by this Contract has any right to a lien upon the premises nor improvement thereon.

IN WITNESS WHEREOF, the seal of the undersigned Contractor have been hereunto set this

_____ day of _____

year of _____, at _____.

By _____

_____ being first duly sworn, say that I am the agent for

_____ and executed the foregoing under authority of said company to do so; that I have read the same, know the contents thereof, and the matters set forth therein are as I truly believe.

By _____

Subscribed and sworn to from before me this _____day of _____, year of _____, at

_____.

Notary Public in and for _____

My Commission Expires _____

This page intentionally left blank.

# SUBSTITUTION REQUEST
## (After Award)

Facilities Planning & Construction
3890 University Lake Drive, Suite 110
Anchorage, Alaska 99058-4669

University of Alaska Anchorage
General Condition Article 16
(907) 786-4900 (phone)
(907) 786-4901 (fax)

From: Date: _____

Project: _____

We hereby submit for your consideration the following product as a proposed substitution for the specified item on the referenced project. We understand that alternate brands, e.g. "or equal" products were to be submitted prior to bid and that this substitution request for award, if considered by the Owner, will be done so only to if it is deemed to be in its interest.

| Submittal Item | Section | Paragraph | Specified Item |
|---|---|---|---|
| _____ | _____ | _____ | _____ |

1. Proposed substitution: _____

2. Describe the reason for the proposed substitution: _____

3. Attach complete technical data, including laboratory test, if applicable. Include complete information on changes to contract documents which proposed substitution requires for its proper installation. Submit with request all necessary samples and substantiating data to verify equal quality and performance to that which is specified. Clearly mark manufacturer's literature to indicate equality in performance. See Instruction To Bidders Article 4 and General Conditions Article 16 for additional information.

4. Fill in the blanks below:
   a. Does the substitution affect dimensions shown on the drawings? _____

      If "yes", clearly indicate changes: _____

   b. Will the undersigned pay for changes to the project, including design, engineering and detailing costs resulting from the requested substitution?

      _____
      (Answer "yes" or "no".)

   c. What effect does the alternate brand have on other trades? _____

   d. Differences between proposed alternate brand and specified item? _____

# SUBSTITUTION REQUEST

5. Credit for proposed substitution, if any: _____
   a. Attach letter of explanation discussing quality and credit issues.

I hereby certify that the foregoing statements are true and correct to the best of my knowledge:

_____

Signature Title Date

_____

Firm or Company Name Address Telephone Number

Signature must be by person having authority to legally bind his firm to the above terms. Failure to provide legally binding signature will result in retraction of acceptance.

---

For Use by Design Consultant

Objection _____No Objection

Remarks:

_____

_____

Signature Date _____

---

University of Alaska Anchorage

Accepted _____Not Accepted

Remarks:

_____

_____

Project Manager's Signature Date _____

END OF DOCUMENT

# SUBMITTAL SUMMARY SHEET

University of Alaska Anchorage

Project Name: _____
Project No.: _____
Building Name: _____
Building Number: _____

1. Item No.: _____
2. Specification Section/Drawing No./Detail No.: _____
3. Name of Item/Drawing Equipment No.: _____
4. Manufacturer/Model No.: _____
5. Use/Location:_____
6. Supplier:_____
   _____
   _____
7. Subcontractor: _____
   _____
8. Provider(s) of warranty service: _____
   _____
   _____
9. Proposed deviation from the contract documents:[1] _____
   _____
10. Other contractor comments: _____
    _____
    _____

CONTRACTOR REVIEW:
Contractor: _____
(Name)

Reviewed By:_____
(Signature)

Title: _____

Date: _____

[1]Entry must be made; if "none," so note.

This page intentionally left blank.

# SHOP DRAWING/SUBMITTAL LOG SHEET

Facilities Planning & Construction * University of Alaska Anchorage * 3890 University Lake Drive, Suite 110 * Anchorage, AK 99508
Voice: 907-786-4900 / Fax: 907-786-4901

| CONTRACTOR | | | | ARCHITECT: | | | | |
|---|---|---|---|---|---|---|---|---|
| U of A No. | No. of Sets | Date | Description | Date from Contractor | Date to Architect | Date from Architect | Date to Contractor | Remarks |
| | | | | | | | | |
| | | | | | | | | |
| | | | | | | | | |
| | | | | | | | | |
| | | | | | | | | |
| | | | | | | | | |
| | | | | | | | | |
| | | | | | | | | |
| | | | | | | | | |
| | | | | | | | | |
| | | | | | | | | |
| | | | | | | | | |
| | | | | | | | | |

This page intentionally left blank.

| **TRANSMITTAL OF SUBMITTALS** | DATE: | SUBMITTAL NO.: _____ |
|---|---|---|

To:
_____
Facilities Planning & Construction
3890 University Lake Drive, Suite 110
Anchorage, AK 99508-4669

____This is a new submittal ____This is a re-submittal

From:
_____
_____

Project Name: _____

Project Number: _____

| Item Number | Description of Item Submitted | Number of Copies | Contract Reference Document | |
|---|---|---|---|---|
| | | | Spec Paragraph | Drawing Sheet # |
| | | | | |
| | | | | |
| | | | | |
| | | | | |
| | | | | |

____ DISAPPROVED
____ APPROVED
____ APPROVED AS NOTED
____ RESUBMIT

Approved is for general design and arrangement only. Not checked for quality, dimension or fit.

Remarks:

**University of Alaska Anchorage**
**Facilities Planning & Construction**

By: _____ Date: _____

This page intentionally left blank.

# UNIVERSITY OF ALASKA ANCHORAGE

## WAIVER OF LIEN RIGHTS AND INDEMNIFICATION
## GENERAL CONTRACTORS

The undersigned hereby waives and releases any and all liens or lien rights which the undersigned may have against the University of Alaska or its property, particularly that real property known as the _____ of the University of Alaska as a result and for all labor, services, materials and good provided, furnished, performed, installed, given, or delivered to, or in relation to the construction of the project known as _____ _____, and the undersigned hereby acknowledge receipt for payment in full thereof.

The undersigned further covenants that all labor, services, materials and good provided, furnished, performed, installed, given or delivered by or through the undersigned for said project have been paid in full. Should any one supplying labor, service materials, or goods through the undersigned for said project agrees to hold the University of Alaska harmless with regard thereto and to indemnify the University of Alaska for any expenses or inconvenience incurred by the University with respect thereto.

Dated this _____ day of _____, year of _____ at

_____.

By _____

_____being first duly sworn, say that I am the agent for

_____ and executed the foregoing under authority of said company to do so; that I have read the same, known the contents thereof, and the matters set forth therein are as I truly believe.

By _____

Subscribed and sworn to before me this _____day of _____, year of

_____, at _____

Notary Public in and for _____

My Commission Expires _____

This page intentionally left blank.

# UNIVERSITY OF ALASKA ANCHORAGE

## WAIVER OF LIEN RIGHTS AND INDEMNIFICATION

### Subcontractors and Material Suppliers

The undersigned hereby waives and releases any and all liens or lien rights which the undersigned may have against the University of Alaska or its property, particularly that real property known as the _____ of the University of Alaska as a result and for all labor, services, materials and good provided, furnished, performed, installed, given, or delivered to, or in relation to the construction of the project known as _____ _____, and the undersigned hereby acknowledge receipt for payment in full thereof.

The undersigned further covenants that all labor, services, materials and good provided, furnished, performed, installed, given or delivered by or through the undersigned for said project have been paid in full. Should any one supplying labor, service materials, or goods through the undersigned for said project agrees to hold the University of Alaska harmless with regard thereto and to indemnify the University of Alaska for any expenses or inconvenience incurred by the University with respect thereto.

Dated this _____ day of _____, year of _____ at

_____.

By _____

_____being first duly sworn, say that I am the agent for

_____ and executed the foregoing under authority of said company to do so; that I have read the same, known the contents thereof, and the matters set forth therein are as I truly believe.

By _____

Subscribed and sworn to before me this _____day of _____,

year of _____, at _____

Notary Public in and for _____

My Commission Expires _____

This page intentionally left blank.

Facilities Planning & Construction
UNIVERSITY of ALASKA ANCHORAGE

# O & M DATA SHEET

PROJECT:_____

Project No.: _____

Bid No.: _____

Building Name: _____

Building Number: _____

1. Item No.:_____
2. Specification Section/Drawing No./Detail No.:_____
3. Name of Item/Drawing Equipment No.:_____
4. Manufacturer/Model No.:_____
5. Use and Location:[1] _____
6. Size/Capacity:_____
7. Supplier:_____

   _____

   _____
8. Source of Spare Parts:_____

   _____

   _____
9. Provider(s) of warranty service:_____

   _____

   _____
10. Subcontractor:_____

    _____

    _____
11. Other contractor comments:_____

    _____

---

CONTRACTOR REVIEW: Contractor: _____
(Name)

Reviewed By: _____
(Signature)

Title: _____

Date: _____

[1]This information must be provided for all items. Be as specific as possible.

This page intentionally left blank.

Form **W-9**
(Rev. January 2011)
Department of the Treasury
Internal Revenue Service

# Request for Taxpayer Identification Number and Certification

**Give Form to the requester. Do not send to the IRS.**

**Print or type**
See **Specific Instructions** on page 2.

Name (as shown on your income tax return)

Business name/disregarded entity name, if different from above

Check appropriate box for federal tax classification (required): ☐ Individual/sole proprietor ☐ C Corporation ☐ S Corporation ☐ Partnership ☐ Trust/estate

☐ Limited liability company. Enter the tax classification (C=C corporation, S=S corporation, P=partnership) ▶

☐ Other (see instructions) ▶

☐ Exempt payee

Address (number, street, and apt. or suite no.)

Requester's name and address (optional)

City, state, and ZIP code

List account number(s) here (optional)

## Part I Taxpayer Identification Number (TIN)

Enter your TIN in the appropriate box. The TIN provided must match the name given on the "Name" line to avoid backup withholding. For individuals, this is your social security number (SSN). However, for a resident alien, sole proprietor, or disregarded entity, see the Part I instructions on page 3. For other entities, it is your employer identification number (EIN). If you do not have a number, see *How to get a TIN* on page 3.

**Note.** If the account is in more than one name, see the chart on page 4 for guidelines on whose number to enter.

**Social security number**

☐☐☐ – ☐☐ – ☐☐☐☐

**Employer identification number**

☐☐ – ☐☐☐☐☐☐☐

## Part II Certification

Under penalties of perjury, I certify that:

1. The number shown on this form is my correct taxpayer identification number (or I am waiting for a number to be issued to me), and
2. I am not subject to backup withholding because: (a) I am exempt from backup withholding, or (b) I have not been notified by the Internal Revenue Service (IRS) that I am subject to backup withholding as a result of a failure to report all interest or dividends, or (c) the IRS has notified me that I am no longer subject to backup withholding, and
3. I am a U.S. citizen or other U.S. person (defined below).

**Certification instructions.** You must cross out item 2 above if you have been notified by the IRS that you are currently subject to backup withholding because you have failed to report all interest and dividends on your tax return. For real estate transactions, item 2 does not apply. For mortgage interest paid, acquisition or abandonment of secured property, cancellation of debt, contributions to an individual retirement arrangement (IRA), and generally, payments other than interest and dividends, you are not required to sign the certification, but you must provide your correct TIN. See the instructions on page 4.

**Sign Here** **Signature of U.S. person ▶** **Date ▶**

## General Instructions

Section references are to the Internal Revenue Code unless otherwise noted.

## Purpose of Form

A person who is required to file an information return with the IRS must obtain your correct taxpayer identification number (TIN) to report, for example, income paid to you, real estate transactions, mortgage interest you paid, acquisition or abandonment of secured property, cancellation of debt, or contributions you made to an IRA.

Use Form W-9 only if you are a U.S. person (including a resident alien), to provide your correct TIN to the person requesting it (the requester) and, when applicable, to:

1. Certify that the TIN you are giving is correct (or you are waiting for a number to be issued),

2. Certify that you are not subject to backup withholding, or

3. Claim exemption from backup withholding if you are a U.S. exempt payee. If applicable, you are also certifying that as a U.S. person, your allocable share of any partnership income from a U.S. trade or business is not subject to the withholding tax on foreign partners' share of effectively connected income.

**Note.** If a requester gives you a form other than Form W-9 to request your TIN, you must use the requester's form if it is substantially similar to this Form W-9.

**Definition of a U.S. person.** For federal tax purposes, you are considered a U.S. person if you are:

- An individual who is a U.S. citizen or U.S. resident alien,
- A partnership, corporation, company, or association created or organized in the United States or under the laws of the United States,
- An estate (other than a foreign estate), or
- A domestic trust (as defined in Regulations section 301.7701-7).

**Special rules for partnerships.** Partnerships that conduct a trade or business in the United States are generally required to pay a withholding tax on any foreign partners' share of income from such business. Further, in certain cases where a Form W-9 has not been received, a partnership is required to presume that a partner is a foreign person, and pay the withholding tax. Therefore, if you are a U.S. person that is a partner in a partnership conducting a trade or business in the United States, provide Form W-9 to the partnership to establish your U.S. status and avoid withholding on your share of partnership income.

This page intentionally left blank.

# GENERAL & SPECIAL CONDITIONS

## UAA RAS WEIDNER CLASSROOM

## PROJECT NO. 17-0033

This page intentionally left blank.

# GENERAL CONDITIONS

**CLAUSE** **TITLE**

## DEFINITIONS, ETC.

1 .....Definitions
2 .....Reference Standards
3 .....Owner Authority
4 .....Time for Completion and Liquidated Damages
5 .....Notice and Service Thereof
6 .....Land and Right-of-Ways
7 .....Asbestos

## PRELIMINARY MATTERS

8 .....Pre-Construction Conference
9 .....Progress Meetings
10 .....Assignments
11 .....Contract Security
12 .....Indemnification
13 .....Insurance
14 .....Permits, Regulations and Surveys
15 .....Project Schedule, Contract Price and Bid Breakdown
16 .....Alternate Brands/Substitutions
17 .....Submittal Schedule

## SUPERINTENDENCE, INSPECTION AND SUBCONTRACTING

18 .....Submittals
19 .....Contractor's Obligations
20 .....Superintendence by Contractor
21 .....Use of Premises and Removal of Debris
22 .....Materials, Services and Facilities
23 .....Inspection and Correction of the Work
24 .....Material Inspection and Testing
25 .....Weather Conditions and Natural Disasters
26 .....Protection of Property and Emergencies
27 .....Mutual Responsibility of Contractors
28 .....Subcontracting
29 .....Separate Contracts
30 .....Assignment of Component Contract by the Owner

## PAYMENTS, ALLOWANCES AND AS-BUILTS

31 .....Special Consultants
32 .....Unit Prices as Contract Sum
33 .....Owner-Furnished Materials
34 .....Stated Allowances
35 .....Periodic Payment to Contractor
36 .....Payment by Contractor

## CONTRACT COMPLETION

37 .....Substantial Completion
38 .....Use and Occupancy Prior to Substantial Completion
39 .....Acceptance, Release and Final Payment
40 .....General Guaranty

## CHANGES, DELAYS AND DISPUTES

41 .....Interference with the Work
42 .....Suspension of Work and Delays
43 .....Differing Site Conditions
44 .....Changes
45 .....Disputes
46 .....Price Adjustment
47 .....Right of the Owner to Terminate Contract

## LAWS AND REGULATIONS

48 .....Equal Employment Opportunity Requirements
49 .....Alaska Statute Title 36
50 .....Payrolls and Basic Records
51 .....Apprentices
52 .....Copeland (Anti-Kickback) Act
53 .....Overtime Compensation
54 .....Minimum Wages
55 .....Employment Preference
56 .....Alaska Forest Products Preference
57 .....Alaska Products and Recycled Alaska Products Preference
58 .....Protection of Lives and Health
59 .....Clean Air and Water
60 .....Hazardous Substances: Spills, Reporting & Communication Plan
61 .....Laws Concerning University of Alaska
62 .....Provisions Required by Law Deemed Inserted
63 .....Interest of Member of or Delegate to Congress
64 .....Other Prohibited Interests
65 .....General Provisions

# GENERAL CONDITIONS

## 1. Definitions

The following terms as used in this work are defined as follows:

a. "Owner": The University of Alaska, its Board of Regents, the President of the University of Alaska, and its employees, officers and agents.

b. “Substantial Completion” or “Substantially Complete”: Work has progressed to the point where, in the opinion of the Owner and as evidenced by its Certificate of Substantial Completion, the Work is sufficiently complete in accordance with the Contract so that the Work can be utilized for all of the purposes for which it was intended. Irrespective of other Work, Substantial Completion cannot be obtained until architectural finishes, electrical, mechanical, and life-safety systems are in place, balanced, and tested for proper operation.

c. "Beneficial Occupancy": Use by the Owner at Owner's option of all or any part of the premises where the Work is being done The Work may or may not be Substantially Complete.

d. "Chief Procurement Officer for Construction": The Chief Procurement Officer for the University of Alaska.

e. "Contracting Officer": The Owner's representative/procurement officer responsible for administration of construction contracts.

f. "Contract Documents": The Agreement and the documents referenced in the Agreement Between Owner and Contractor, including but not limited to the Project Manual consisting of the Instructions to Bidders, the Special Conditions, if any, the Special Instructions to Contractors, if any, these General Conditions, the Laborer's and Mechanics' Minimum Rates of Pay, the manufacturers' instructions with reference to approved materials, the Technical Specifications, and the Contract Drawings, and including the Notice-of-Intent-to-Award Contract Letter, and all addenda to all of the forgoing.

g. "Contract or Project Manager": The person designated by the Contracting Officer as the Owner's representative for this contract, responsible for the day-to-day coordination between the Owner and the Contractor.

h. "Contract": The Agreement between Owner and Contractor and the Contract Documents.

i. "Architect or Engineer or A/E": The design consultant of the Owner. Any reference to architect, engineer, inspector, or A/E within this contract shall mean the Owner.

j. "Contractor": The person, firm, or corporation contractually responsible to the Owner to provide the services called for by this contract. Such entity may also be referred to as Managing General Contractor, General Contractor, or Prime Contractor.

k. "Subcontractor": A person, firm, or corporation that provides a portion of the responsibility of the Contractor in connection with this contract.

l. "Project": The total finished product of which the Work required by the Contract may be all or part and which may include construction by other contractors.

m. "Work": The construction and/or services required by the Contract, whether partially or totally complete, including all labor, materials, equipment, and services provided or to be provided by the Contractor under the Contract, together with the means as determined by the Contractor to achieve the finished product. The Work specifically includes all necessary clean-up activities set forth in Clause 21 hereof. The Work may constitute all or a part of the Project.

n. "Furnish": Supply and deliver to the project including the cost to supply and deliver.

o. "Install": Build into the Work, ready to use in a complete, finished, and operable system, including the cost to install.

p. "Provide": Furnish and install for a complete, finished, and operable system.

q. "Shop Drawings, Setting Drawings, Manufacturer's Printed Information and Submittal (collectively known as "Submittals")": The Contractor's information consisting of drawings, catalogs, illustrations, calculations, and other data delivered to the Owner for the purpose of assuring the Owner, prior to execution of that part of the Work, that in the Owner's sole discretion, the prescriptive element, component, subsystem, or service to be provided conforms with the Contract. The Contractor is responsible to the Owner for the accuracy and completeness of the Submittals.

r. "Reasonable Cost": A cost is reasonable if, in its nature or amount, it does not exceed that which would be incurred by an ordinary prudent person in the conduct of competitive business.

s. "Direct Cost": A direct cost is any cost that can be identified specifically with a particular final cost objective, i.e., with this Contract, or an item of extra Work, or change order under the Contract.

t. "Indirect Cost": An indirect cost, collectively called overhead, is any cost not directly identified with a single, final cost objective, but identified with two or more final cost objectives or an intermediate cost objective.

u. "Days": Calendar days unless otherwise noted.

## 2. Reference Standards

a. When standards of the Federal Government, the State, trade societies, or trade associations are referred to in the Contract Documents by specific date of issue, these shall be considered part of the Contract. When such references do not bear a date of issue, the current published edition, including supplements thereto at date of first invitation to bid, shall be considered as part of this Contract unless otherwise specified.

b. Codes and Standards. The latest editions of the following codes and standards except as modified by 13 Alaska Administrative Code, Chapters 50 and 55 (13 AAC 50 & 55) shall be adhered to:

All applicable Federal, State, and Local Codes
International Building Code (ICBO)
International Mechanical Code (ICBO)
Uniform Plumbing Code
National Electrical Code
International Fire Code (ICBO)
National Fire Codes, Vols. 1 through 16
Alaska Fire Safety Code
Alaska General Safety Code, Vols. I, II, III

Publications of the following industry institutes and associations shall be used as minimal standards where applicable and shall not be contravened without prior written approval from the Owner:

American Iron and Steel Institute
American Institute for Steel Construction
American Society for Testing and Materials
American Welding Society
National Fire Protection Association
Portland Cement Association
National Board of Fire Underwriters
National Electrical Manufacturers' Association
Underwriters Laboratory Standards for Safety

## 3. Owner Authority

As provided in the Contract or by subsequent written instructions, the Owner shall give all orders and directions contemplated under this Contract. The Owner may determine the amount, quality, acceptability, and fitness of the several kinds of work and materials that are to be paid for under this Contract.

**4. Time for Completion and Liquidated Damages**

By executing the Agreement, the Contractor represents that it has visited the site, familiarized itself with the local conditions under which the Work is to be performed, and correlated its observations with the requirements of the Contract Documents. It is hereby understood and mutually agreed, by and between the Contractor and the Owner, that the date of beginning and the time for completion of the Work to be done pursuant to this contract are ESSENTIAL CONDITIONS of this Contract; and it is further mutually understood and agreed that the Work embraced in this Contract shall be commenced on a date to be specified in the "Notice-of-Award".

The Contractor agrees that said Work shall be prosecuted regularly, diligently, and uninterruptedly at such rate of progress as shall insure full completion thereof within the time specified. It is expressly understood and agreed by and between the Contractor and the Owner that the time for completion of the Work described herein is a reasonable time for the completion of the same, taking into consideration the severe weather, severe shipping problems, and unusual industrial conditions affecting the project locally. If the Contractor shall neglect, fail, or refuse to complete the Work within the time herein specified, or any proper extension thereof granted by the Owner, then the Contractor does hereby agree, as part of the consideration for awarding of this Contract, to pay the Owner the amount specified in the Contract, not as a penalty but as a liquidated damage for such breach of contract as herein set forth, for each and every calendar day that the Contractor shall be in default after the time stipulated for completing the Work. Said liquidated damage amount is fixed and agreed upon by and between the Contractor and the Owner because of the impracticability and extreme difficulty of fixing and ascertaining the actual damages the Owner would in such event sustain; said liquidated damage amount is agreed to be the amount of damages which the Owner would sustain and said amount may be retained from time to time by the Owner from current periodical payment estimates.

It is further agreed that time is of the essence of each and every portion of this Contract wherein a definite and certain length of time is fixed for the performance of any act whatsoever; and where under the Contract an additional time is allowed for the completion of any work, the new time limit fixed by such extension shall be of the essence of this Contract. Provided that, the Contractor shall not be charged with liquidated damages or any excess cost when the Owner determines that the Contractor is without fault; and the Contractor's reasons for the time extension are acceptable to the Owner. Provided further that the Contractor shall not be charged with liquidated damages or any excess cost when the delay in completion of the Work is due:

a. To any preference, priority, or allocation order duly issued by the United States Government.

b. To unforeseeable cause beyond the control and without the fault or negligence of the Contractor including, but not restricted to, acts of God, acts of the public enemy, acts of the Owner, acts of another Contractor in the performance of a contract with the Owner, fires, floods, epidemics, quarantine restrictions, strikes, freight embargoes, and unusually severe weather.

c. To delays of subcontractors occasioned by any of the clauses specified in Subsections a. and b. of this Clause.

And provided further that the Contractor shall, within ten (10) days from the beginning of such delay, notify the Owner in writing of the causes of the delay and the time it believes to have been necessitated by the delay. The Owner then shall ascertain the facts and extent of the delay and notify the Contractor within a reasonable time of its decision in the matter.

**5. Notice and Service Thereof**

Any notice to any Contractor from the Owner relative to any part of this Contract shall be in writing and considered delivered and the service thereof completed when said notice is deposited in the United States Mail, postage prepaid, to the said Contractor at his address as shown in the agreement or delivered in person to said Contractor or his authorized representative on the work.

**6. Land and Rights-of-Way**

Prior to the start of construction and except as required under Clause 14, the Owner shall obtain all lands and right-of-ways necessary for carrying out and completing the Work pursuant to this Contract.

**7. Asbestos**

The Work of this project has been reviewed to determine the presence of asbestos and/or asbestos containing material (ACM) and if present whether they pose an asbestos health hazard. This information, if appropriate, may be found in the Technical Specifications or on the drawings. However, owing to the nature of the Work, the presence of asbestos or ACM may not be discovered until the Contractor begins its Work. The Contractor should be alert to suspecting asbestos or ACM when unfamiliar materials or insulation are encountered in any demolition, rehabilitation or maintenance on the Project.

The Contract may identify asbestos or ACM and make its removal and disposal the responsibility of this Contractor or it may identify asbestos or ACM the Contractor is to avoid. If asbestos or ACM is disturbed or the Contractor suspects it has encountered such material it shall immediately stop work in the area, order all persons out and notify the Owner of the hazardous or suspected hazardous materials.

The Owner upon receipt of notification shall cause an investigation to be conducted and shall make such tests as are necessary to determine whether such material exists and if so whether the asbestos or ACM poses a health hazard. The Owner may ask the Contractor to revise its schedule or issue a change modifying the Work. An adjustment in the Contract shall be made for any additions or deletions to the Work. However, the Contractor shall not be entitled to any costs in addition to the Contract from any delay or subsequent extension of time from any act, omission or Work under this clause.

The Contractor shall provide the appropriate safeguards in order to avoid disturbing asbestos or ACM when warned and for the protection its employees. The Contractor shall be liable for all costs resulting from its negligence in fulfilling its responsibilities under this clause.

**8. Pre-Construction Conference**

Subsequent to Notice-of-Award and prior to beginning on-site Work, the Owner will convene a meeting of the parties to the Contract. The purpose of this meeting is to initiate personal contact among the parties' representatives and establish coordination procedures. Other items of interest may be raised at this meeting. The time of the meeting will be mutually agreed upon by the parties.

**9. Progress Meetings**

The Owner will conduct a job-site meeting a minimum of once each month unless otherwise stated in the Special Conditions. The Contractor and such subcontractors as the Contractor may require shall attend. The purpose of these meetings is to review the progress of the Work and arrive at solutions to such problems as may have been encountered.

**10. Assignments**

The Contractor shall not assign the whole or any part of this Contract or any monies due or to become due hereunder without the prior written consent of the Owner. In case the Contractor assigns all or any part of any monies due or to become due under this Contract, the instrument of assignment shall contain a clause substantially to the effect that it is agreed that the right of the assignee in and to any monies due or to become due to the Contractor shall be subject to prior claims of all persons, firms, and corporations for the services rendered or materials supplied for the performance of the Work called for in this Contract.

**11. Contract Security**

a. Within ten (10) days of the receipt of written Notice-of-Intent-To-Award, the Contractor shall furnish a Performance Bond on a form provided by the Owner in an amount at least equal to one hundred percent (100%) of the Contract sum as security for the faithful performance of this Contract and also a Payment Bond in an amount of one hundred percent (100%) of the Contract sum. Said surety shall be licensed to do business in the State of Alaska and shall be listed as a surety acceptable on federal bonds by the U.S. Department of the Treasury in Treasury Circular 570. Each bond must meet federal Miller Act requirements and must be approved by the Owner.

b. If at any time the Owner for justifiable cause shall be or become dissatisfied with any surety or sureties then upon the Performance or Payment bonds or the surety fails to furnish reports on its financial condition as required by the Owner, the Contractor shall, at the Contractor's sole expense, within five (5) days after notice from the Owner to do so, substitute an acceptable bond (or bonds) in such form and sum and signed by such other surety or sureties as may be satisfactory to the Owner. No further periodic payments to Contractor shall be deemed due nor shall be made until the new surety or sureties shall have furnished such an acceptable bond to the Owner.

c. In addition, the Contractor shall promptly furnish additional security required to protect the Owner and persons supplying labor or materials under this Contract if the Contract price is increased so that the penal sum of any bond becomes inadequate in the opinion of the Contracting Officer.

**12. Indemnification**

To the fullest extent permitted by law, the Contractor shall defend, indemnify, and hold harmless the Owner from and against any and all loss, expense, damage, claim, demand, judgment, fine, charge, lien, liability, action, cause of action, or proceedings of any kind whatsoever (whether arising on account of damage to or loss of property, or personal injury, emotional distress, or death) arising directly or indirectly in connection with the performance of the Work, whether the same arises before or after completion of the Contractor's operations or expiration of this Agreement, except for damage, loss, or injury resulting from the Owner's sole negligence or intent to cause property damage or personal injury. The indemnification obligation set forth herein shall not be limited by compensation, damages, or benefits payable by or under the Alaska Workers' Compensation Acts or similar acts.

**13. Insurance** (Revised 9/06)

a. Without limiting its indemnification, it is agreed that the Contractor shall purchase at its own expense, and maintain in force at all times during the performance of services under this Contract, the insurance and endorsements required under this clause and shall present to the Owner proof of such insurance and endorsements prior to commencing work. The Contractor shall furnish Owner with a Certificate of Insurance with a copy of the declarations page and the required endorsements attached thereto showing the type, amount, effective dates, and dates of expiration of all policies. All endorsements shall reference the policy and this Contract. The "University of Alaska" is to be identified on all certificates and endorsements. The Contractor agrees, to the extent and in the manner required by the Owner, to submit for the approval of the Owner, copies of any insurance policies maintained by the contractor specified in connection with the performance of this contract. All insurance must be issued by companies admitted to do business in the State of Alaska and have a rating in A.M. Best of A-, Class VII or better. Failure to furnish satisfactory evidence of insurance, lapse of a policy, or inadequate limits, is a material breach and grounds for termination of this contract. Failure of Owner to demand such certificates or other evidence of full compliance with these insurance requirements or failure of Owner to identify a deficiency from evidence that is provided shall not be construed as a waiver of Contractor’s obligation to maintain such insurance.

If Contractor fails to maintain the insurance as set forth herein, Owner shall have the right, but not the obligation, to purchase said insurance at Contractor’s expense.

b. Subcontractors:

The Contractor, following award, shall cause each Subcontractor or Sub-subcontractor, prior to commencing work on site, to provide the insurance required under this Contract with the exception of Builders Risk Insurance, and to submit proof of insurance to the Owner. All Subcontractors and Sub-subcontractors are required to add the Owner as an additional insured to all policies, with the exception of workers' compensation. All Subcontractors and Sub-subcontractors are to waive subrogation against the Owner on all policies. Limits for Subcontractors and Sub-subcontractors Commercial General Liability insurance shall be a minimum of $1,000,000 (one million) per occurrence and $2,000,000 (two million) aggregate, unless otherwise stated in the Special Conditions, notwithstanding paragraph 13.f.2.

c. Notice Period for Proof of Insurance, Change, Cancellation, or Non-Renewal:

Certificates of Insurance, on a form acceptable to the Owner, must be furnished to the Owner within ten (10) days of receipt of the Notice-of-Intent-to-Award. Contractor will endeavor to provide thirty (30) days prior written notice to the Owner if coverage is suspended, voided, cancelled by either party, reduced in coverage, reduced in limits below minimum required limits, or non-renewed.

d. Limits:

All insurance limits are minimum. If the Contractor's, Subcontractors', or Sub-subcontractors' policies contain higher limits, the Owner shall be entitled to coverage to the extent of such higher limits. Limits may be a combination of primary and excess (umbrella) policies. If, during any time that insurance is to remain in effect under this Contract, the minimum limits required by this contract are reduced by Claims or for any other reason, it will be the responsibility of the Contractor, Subcontractors, or Sub-subcontractors, at their own expense, to reinstate said limits to comply with the minimum requirements and shall furnish to Owner a new certificate of insurance showing such coverage is in force.

e. Insurance Required:

1. Workers' Compensation and Employers Liability Insurance: Contractor shall maintain workers' compensation and employer liability insurance as required by any applicable law or regulation. The commercial umbrella and/or employers liability limits shall not be less than $500,000 each accident for bodily injury by accident and $500,000 each employee for bodily injury by disease. The Contractor shall be responsible for Workers' Compensation Insurance for any subcontractor who directly or indirectly provides services under this contract. This coverage must include statutory coverage for states in which employees are engaging in work. If there is an exposure of injury to Contractor's employees under the U.S. Longshoremen's and Harbor Workers' Compensation Act, the Jones Act, or under laws, regulations, or statutes applicable to maritime employees, coverage shall be included for such injuries or Claims. Contractor waives all rights against the Owner for recovery of damages to the extent these damages are covered by the workers' compensation and employer's liability or commercial umbrella liability insurance obtained by Contractor pursuant to this Contract.

2. Commercial General Liability Insurance: The Contractor is required to provide Commercial General Liability (CGL) insurance with a limit not less than $1,000,000 (one million dollars) each occurrence and $2,000,000 (two million dollars) aggregate not excluding premises, operations, independent contractors, personal/advertising injury, products-completed operations, liability assumed under an insured contract (including defense costs and the tort liability of another assumed in a business contract). The Owner shall be included as an additional insured under the CGL and under the commercial umbrella, if any, to include coverage for Owner with respect to liability arising out of the completed operations of Contractor, and which, for projects greater than $5,000,000 (five million), coverage shall be maintained in effect for the benefit of Owner for a period of two years following the completion of the work. Coverage is to apply on a primary basis in relation to the University's own insurance or self-insurance, which are to be non-contributing. The status of Owner as an insured under a CGL obtained in compliance with this contract shall not restrict coverage under such CGL with respect to the escape or release of pollutants at or from a site owned or occupied by or rented or loaned to Owner. There shall be no endorsement or modification of the CGL limiting the scope of coverage for liability arising from explosion, collapse, or underground property damage. The policy must provide cross-liability coverage as would be achieved under the standard ISO separation of insureds clause. Contractor waives all rights against Owner for recovery of damages to the extent these damages are covered by the CGL or umbrella liability insurance maintained pursuant to this Contract. Contractor will provide a waiver of subrogation under the CGL policy.

3. Business Auto Coverage: Contractor is required to maintain automobile liability insurance with a limit of not less than $500,000 per occurrence bodily injury and property damage. Such insurance shall cover liability arising out of any auto (including owned, hired, and non-owned autos). Coverage shall be written on standard ISO forms from 1990 editions forward, or a substitute form providing equivalent liability coverage. If such coverage is not provided in the base policy, the policy shall be endorsed to provide contractual liability coverage equivalent to that provided in the 1990 and later editions of CA 00 01. Contractor waives all rights against the Owner for recovery of damages to the extent these damages are covered by the auto or commercial umbrella liability insurance obtained by Contractor pursuant to this Contract. The Owner shall be included as an additional insured. Contractor will provide a waiver of subrogation under the Business Auto policy.

4. Builders Risk: The Contractor shall purchase and maintain in force builders risk insurance on the entire work. Such insurance shall be written on a completed value form and in an amount equal to the initial contract sum, subject to subsequent modifications of the contract sum. The insurance shall apply on a replacement cost basis. The insurance shall name as additional insureds the Owner and all Subcontractors and Sub-subcontractors in the work. The insurance shall cover the entire work at the site including reasonable compensation for architects' services and expenses made necessary by an insured loss. Insured property shall include portions of the work located away from the site but intended for use at the site, portions of the work in transit, and shall include the value of any Owner-furnished materials. The policy shall cover the cost of removing debris, including demolition as may be made legally necessary by the operation of any law, ordinance, or regulation. The builders risk insurance shall be written to cover all risks of physical loss except those specifically excluded in the policy, and shall insure at least against the perils of fire and extended coverage, theft, vandalism, malicious mischief, and collapse. Quake and/or flood coverage may be required, per Special Conditions. Any deductible applicable to the insurance shall be identified in the contract documents and the responsibility for paying the part of any loss not covered because of the operation of such deductible shall be borne by the Contractor. The builders risk insurance shall be maintained in effect, unless otherwise provided for in the contract documents, until the earliest of the following dates:

   a) The date on which all persons and organization who are insureds under the policy agree in writing that it is terminated;

   b) the date on which final payment of this contract has been made;

   c) the date on which the insurable interests in the property of all insureds other than Owner have ceased.

   If Owner is damaged by the failure of Contractor to maintain insurance as required in this section, then Contractor shall bear all reasonable costs properly attributable to that failure. Owner and Contractor waive all rights against each other and each of the Subcontractors, Sub-subcontractors, officers, directors, agents, and employees, for recovery for damages caused by fire and other perils to the extent covered by builders risk insurance or any other property insurance applicable to the work. The policy shall specifically permit partial or beneficial occupancy at or prior to Substantial Completion or final acceptance of the entire Work.

**14. <u>Permits, Regulations, and Surveys</u>**

a. The Contractor shall procure and pay for all permits, licenses, and approvals necessary for the execution of this contract and completion of the work pursuant hereto. The Contractor agrees to defend, indemnify, and hold harmless the Owner against liability, including all costs, for infringement upon any United States patent arising out of performing this Contract.

b. Contractor shall adhere to all applicable federal, state, and local laws and regulations relating to the performance of the Work, the protection of adjacent property, and the erection or maintenance of passageways, guard fences, or other protective facilities. Contractor shall adhere to all University of Alaska BOR and SW Policies and Regulations to the extent they apply to the public generally, including, but not limited to, speed limits, prohibition of firearms on campus, and prohibitions on use of alcohol or drugs on university property.

c. Except for the vertical and horizontal control shown on the Contract Documents as existing, no surveys or control stakes will be furnished by the Owner. All surveys required to locate the Work according to the Contract Documents shall be performed and paid by the General Contractor.

**15. <u>Project Schedule, Contract Price, and Bid Breakdown</u>**

Twenty-one (21) days prior to the date of submittal of the first periodic estimate for partial payment and in no event later than forty-five (45) days after receipt of the Notice-of-Award, whichever date occurs first, the Contractor shall deliver to the Owner for its review:

a. Provide an itemized listing of the Work according to the various sections under each division, the value of each, and the proposed dates of commencement and completion of each. Within the time stated above, the Contractor shall submit two copies of a detailed arrow diagram which shall be of the customary activity-on-arrow type, describing the activities to be accomplished in the Project, their dependency relationships with the critical path generally plotted along the center of the network diagram, including two copies each of tabulated schedules, one showing the activities with the information below and one indicating the proposed estimated completed value of the Work at intervals coinciding with the monthly periodic payment request dates. The estimated monthly completed value of the Work shall be updated each month and submitted with the periodic payment request. Costs associated with on-site preparatory work (start-up or set-up costs) will be prorated over all Work activities. Separate payment for on-site preparatory costs will not be made by the Owner.

b. Provide a practicable schedule using the subdivisions of Work listed for (a) above showing the order in which the Contractor proposes to carry on the Work, the date on which it will start the several salient features, and the contemplated dates for completing same. The schedule shall be in the form of a progress chart of suitable scale to indicate appropriately the percentage of the Work scheduled for completion at any time. If the Contractor fails to submit a construction schedule within the time herein prescribed or revise the schedule as herein provided, the Owner may withhold approval of the periodic payment. In addition to construction activities, the progress chart shall include the submittal and approval of materials and Submittals, the procurement of critical materials and equipment, adjusting or testing subsystems, fabrication of special materials and equipment and their installation and testing. All activities of the Owner that affect progress including Owner instructions, Record Drawings, and Contract dates for beginning and completion of all parts of the Work will be shown. The selection and number of total activities under a. and b. shall be subject to the Owner's approval. Even though the Owner may review and approve a schedule prepared by the Contractor, the Owner in no way warrants or opines that the schedule as approved is reasonable, nor does the Owner assume any responsibility whatsoever in connection with the Contractor's schedule. The Contractor is solely responsible for all aspects of the schedule.

c. The value of the activities employed in the schedule will be used only for determining the basis of partial payments and will not be considered as fixing a basis for additions to, or deductions from, the Contract sum. Neither shall Work represented in making up any schedule be construed as complete or acceptable when its respective value is paid in a periodic payment, nor shall payment constitute waiver of defects.

d. A condensed tabulation of the activities summarizing the costs in the schedule under b. above shall be provided. The value of the activities in the summary network when approved shall constitute the bid breakdown and shall appear on the Owner's Periodic Estimate for Partial Payment Form. A tabulation shall also be presented showing the summary activities, and the proposed estimated completed value of the Work at intervals coinciding with the monthly periodic requests for partial payment for the entire term of the Contract.

e. A monthly update of the information requested in paragraphs a. and b. above, beginning the second month after Notice-of-Award and continuing until acceptance of the Work. The monthly update shall be submitted with the Contractor's Periodic Estimate for Partial Payment, but in no event, later than the fifth of each month while the Work is in progress. The monthly update shall be revised to show Work complete and a revised order of completion of activities, if appropriate, through Project completion including any effect approved changes will have on the scheduling of the remainder of the Work. Failure to provide the monthly update will be cause to withhold partial payment.

f. If, in the opinion of the Owner, the Contractor falls behind its most current schedule, the Contractor shall take steps necessary to improve its progress, including those that may be required by the Owner, without additional cost to the Owner. Failure of the Contractor to comply with the requirements of the Owner under this Clause shall be grounds for a determination by the Owner that the Contractor is not prosecuting the Work with sufficient diligence to ensure completion within the time specified in the Contract. Upon making this determination, the Owner may terminate the Contractor's right to proceed with the Work, or any separable part of it, in accordance with the default terms of this Contract.

g. Although the Contractor is required herein to submit a schedule based upon a completion date as stated in this Contract and not sooner, the Contractor may submit a schedule for early completion provided the schedule is realistic and the Owners activities and milestones are met; however, the Contractor agrees, when electing an early completion schedule, that the Owner will not be liable for damages of any kind for whatever reason including delay if the Contractor is not able to meet its earlier completion date and that all it will be entitled to is additional time, if appropriate. Permission to present a schedule with an earlier completion date does not change the Contract completion date, or time, at award, except as amended by modification to the Contract.

**16. <u>Alternate Brands/Substitutions</u>**

a. ALTERNATE BRANDS: Whenever a material, article, or piece of equipment or system is identified in the Contract Documents by reference to manufacturers' or vendors' names, trade names, catalog numbers, etc., it is intended to establish a minimum standard. Unless otherwise noted, alternate brands of any material, article, equipment, or system of other manufacturers or vendors that will perform adequately the duties imposed by the general design of the Project will be considered equally acceptable; provided the material, article, equipment, or system so proposed is, in the opinion of the Owner, of equal substance, function, dimension, appearance, and quality.

Alternate brands may be qualified if found to be equal or better, only by submitting a written request to the Owner for approval, on the form provided, a minimum of fourteen (14) days in advance of the bid opening, accompanied by description, catalog cuts, etc. and other information as may be required by the Owner for proper evaluation of the request. Any brand named product listed in the technical specification followed by the phrase "or equal" is understood to mean an alternate product that, if presented, must be prior to bid opening as provided herein. If in the opinion of the Owner, an alternate brand is determined to be of equal substance, function, dimension, appearance, and quality, an addendum shall be issued to all parties who have been furnished Contract Documents for bidding purposes.

b. SUBSTITUTIONS: A substitution will only be considered after the bid opening when deemed by the Owner to be in its sole interest. In which case, the request shall be accompanied by a monetary proposal, full description, catalog cuts, drawings, prints, and/or test report, and such other information as may be required by the Owner on the form provided and as may be needed for proper evaluation of the request. Substitutions shall not be purchased or installed in the Project by the Contractor without the Owner's written approval.

c. Any proposed substitution whose characteristics differ from the specified item to such an extent as to necessitate changes in the mechanical, electrical, or other basic design of the Project shall include the cost of any such changes, the design and cost of design, which costs shall be borne by the Contractor. Determination of a substitution request will be based on the Owner's comparisons as to quality, adaptability, aesthetics, contract amount change if applicable under Clause b. above, etc. between the proposed substitution and specified items.

**17. Submittal Schedule**

Within thirty (30) days after receipt of written Notice-of-Award, the Contractor shall submit a schedule of proposed Submittals for the Owner's information. The schedule shall detail the specification section or location on plans, quantity, description, and estimated dates of each proposed Submittal and the latest date by which the Contractor must receive favorable Owner's review in order to meet the scheduled completion date. This schedule shall be coordinated with the Project schedule for completion. In no case shall the Contractor's Submittal schedule allow less than fourteen (14) days for Owner's review.

Partial Submittals shall be identified as such and shall be accompanied by a statement from the Contractor identifying the remaining material to be submitted.

**18. Submittals**

a. Shop Drawings, Product Data, and Samples

1. Contractor shall submit Product Data and Shop Drawings to Owner for review in accordance with the accepted "Submittal Schedule and Shop Drawing Record". The data shown on the Submittals will be complete with respect to quantities, dimensions, specified performance and design criteria, materials, and similar data to show Owner the materials and equipment Contractor proposes to provide and to enable Owner to review the information for the limited purposes required by Paragraph 18.b.

2. Contractor shall also submit Samples to Owner for review in accordance with said accepted Submittal Schedule and Shop Drawing Record. Each Sample will be identified clearly as to material, supplier, pertinent data such as catalog numbers and the use for which intended and otherwise as Owner may require to enable Owner to review the Submittal for the limited purposes required by Clause 18.b.

b. Review

1. Owner's review will be only to determine if the items covered by the Submittals, after installation or incorporation in the Work, appear to conform to the information given in the Contract Documents and be compatible with the design concept of the completed Project as a functioning whole as indicated by the Contract Documents. Owner's review will not extend to means, methods, techniques, sequences or procedures of construction (except where a particular means, method, technique, sequence or procedure of construction is specifically and expressly called for by the Contract Documents) or to safety precautions or programs incident thereto. The review of a separate item as such will not indicate approval of the assembly in which the item functions.

2. Contractor shall make corrections required by Owner, and shall return the required number of corrected copies of Submittals, or new Samples, and resubmit for review. Contractor shall direct specific attention in writing to revisions other than the corrections called for by Owner on previous Submittals.

c. Contractor's Responsibility for Variation

Owner's review of Submittals or Samples will in no way relieve Contractor from responsibility for any variation from the requirements of the Contract Documents unless Contractor has, in writing, specifically called Owner's attention to each such variation at the time of submission and Owner has given written approval of each such variation by specific written notation thereof incorporated in or accompanying the Submittal or Sample; nor will any review by Owner relieve Contractor from responsibility for complying with the requirements of Clause 16.b and 16.c.

d. Work Prior to Review of Submittal

Where a Submittal or Sample is required by the Contract Documents or the "Submittal Schedule and Shop Drawing Record" as accepted by Owner, any related Work performed prior to Owner's review of the pertinent Submittal will be at the sole responsibility of Contractor and any related Work that is not in accordance with the reviewed Submittal and Contract Documents shall be corrected at the Contractor's sole expense.

**19. Contractor's Obligations**

The Contractor shall, in a good workmanlike manner, do and perform all Work and furnish all supplies, materials, machinery, equipment, facilities, and means, except as herein otherwise expressly specified, necessary or proper to perform and complete all the Work required by this Contract within the time herein specified, in accordance with the provision of this Contract, the Contract Documents, and any and all supplemental plans and drawings, and in accordance with the directions of the Owner as given from time to time during the progress of the Work. All equipment, material, and articles incorporated into the Work covered by this Contract shall be new and of the most suitable grade for the purpose intended, unless otherwise specifically provided in this Contract.

The Contractor shall furnish, erect, maintain, and remove such construction plant and temporary works as may be required. The Contractor shall observe, comply with, and be subject to all terms, conditions, requirements, and limitations of the Contract and specifications, and shall do, carry on, and complete the entire Work to the satisfaction of the Owner.

**20. Superintendence by Contractor**

The requirement for competent, well-organized, on-site daily supervision by the Contractor is a necessity. For the term of this Contract, the Contractor shall appoint an on-site project superintendent with competence and experience in the work of this Project, who shall have full authority to act for and bind the Contractor. No later than thirty (30) days after receipt of the Notice-of-Award, the Contractor shall provide the Owner in writing the name and detailed experience record of the person it proposes as project superintendent. The Owner has seven (7) days to notify the Contractor if the proposed project superintendent is not acceptable to the Owner. The project superintendent shall be supported by competent assistants, as necessary. The project superintendent and assistant(s) must be acceptable to the Owner and shall continue in that capacity for the duration of the Work unless they cease to be employees of the Contractor. The project superintendent must be in place before the Contractor submits its first Periodic Estimate for Partial Payment.

**21. Use of Premises and Removal of Debris**

The Contractor expressly undertakes at Contractor's own expense:

a. To take every precaution against injuries to persons or damage to property in connection with this Project.

b. To store Contractor's apparatus, materials, supplies, and equipment in such orderly fashion at work site as will not unduly interfere with the progress of Contractor's Work or the work of any other contractor or subcontractor.

c. To place upon the Work or any part thereof only such loads as are consistent with the safety of that portion of the Work.

d. To cleanup frequently and as often and in such manner as the Owner may direct all refuse, rubbish, scrap materials, and debris caused by the Contractor's operations to the end that at all times the Work site shall present a neat, orderly, and workmanlike appearance.

e. Before final payment, to remove, and dispose of in an environmentally safe manner, all surplus material, false work, temporary structures, including foundations thereof, plant of any description, and debris of every nature resulting from the Contractor's operations and to put the job site in a neat, orderly condition including the cleaning of windows, exterior and interior surfaces with manufacturers recommended procedures after the installation of all materials, equipment and testing.

f. To effect all cutting, fitting, or patching of the Contractor's Work required to make the same conform to the Project plans and specifications and, except with the prior written consent of the Owner, not to cut or otherwise alter the work of any other contractor or subcontractor.

g. Trash and debris shall be disposed of off campus in accordance with state and municipal/borough statutes. Hazardous materials shall be prepared and disposed of in accordance with federal, state and municipal/borough laws and regulations.

**22. Materials, Services, and Facilities**

The Contractor shall include in its lump-sum bid the cost to provide and pay for everything necessary to complete the Work including, but not limited to, design, supervision, labor, the cost of employing labor, materials, the delivery of materials, loading and unloading materials, the positioning of materials, removal of waste, packaging, equipment, machinery, power, water, heat, light, temporary construction of every nature whatsoever, escalation and price fluctuation, overhead and profit, and all other services all within the time specified to execute, complete, and deliver the work., unless otherwise noted in the Contract Documents.

Any work necessary to be performed beyond scheduled working hours established by the Contractor, for example on Sundays or legal holidays, shall be performed without additional expense to the Owner.

**23. Inspection and Correction of the Work**

a. The Owner and its authorized representatives shall be permitted to inspect all Work, material, payrolls, records of personnel, invoices of materials, and other relevant data and records of the Contractor or subcontractors relating to the Work. No representative of the Owner designated to inspect the Work is authorized to change any provision of the specification unless that authority is specifically stated in writing by the Owner, nor shall the presence or absence of such representative relieve the Contractor from any requirements of the contract.

b. All work, all materials whether incorporated into the Work or not, all processes of manufacture, and all methods of construction shall be at all times and places subject to the inspection of the Owner who shall be the final judge of the quality and suitability of the Work and materials for the purposes for which they are used. Should they fail to meet Owner's approval, they shall forthwith be reconstructed, made good, replaced, and/or corrected as the case may be by the Contractor at Contractor's sole expense. Rejected material shall immediately be removed from the work site at no cost to the Owner. If, in the opinion of the Owner, it is undesirable to replace any defective or damaged materials or to reconstruct or correct any portion of the Work injured or not performed in accordance with the Contract, the compensation to be paid to the Contractor hereunder shall be reduced by such amount as in the judgment of the Owner shall be equitable.

c. The Owner will have authority to reject Work that, in its opinion, does not conform to the Contract. Whenever, in its reasonable opinion, it is considered necessary or advisable to insure the proper implementation of the intent of the Contract, Owner may require the Contractor to stop the Work or any portion thereof, or require special inspection or testing of the Work, whether or not such Work be then fabricated, installed, or completed.

d. If any Work should be covered contrary to the specific request of the Owner, it shall, if requested by the Owner, be uncovered for its observation and replaced after such observation at the Contractor's sole expense.

e. If any other Work has been covered which the Owner has not specifically requested to observe prior to it being covered, the Owner may request to see such Work; and it shall be uncovered by the Contractor. If such Work be found to be in accordance with the Contract, the cost of uncovering and replacement shall, by appropriate Change Order, be charged to the Owner. If such Work be found not in accordance with the Contract, the Contractor shall pay such costs. In the event that the Contractor determines the Owner's decision is contrary to the requirements of the Contract, it shall proceed according to Clause 44 of these General Conditions.

## 24. Material Inspection and Testing

a. All materials and equipment used in the construction of the Project are subject to inspection and testing at the request of the Owner. The laboratory or inspection agency shall be selected by the Owner.

b. All testing, unless otherwise specifically called for by the technical specifications, shall be paid for by the Owner, except that the Contractor shall reimburse the Owner for the cost of tests that show the failure of the item or items tested to comply with contract requirements.

c. The Contractor shall reimburse the Owner for all costs incurred by the Owner resulting from the Contractor's failure to be ready for testing when required or scheduled.

## 25. Weather Conditions and Natural Disasters

The Contractor shall assume all risks for damage to the Work and materials from fire, earthquake, storm, flood, and/or other causes prior to the completion and acceptance of the Work and shall, at the Contractor's sole cost and expense, repair and/or replace any Work or materials so damaged or destroyed.

In the event of temporary suspension of Work, or during inclement weather, or whenever the Owner shall direct, the Contractor shall and shall cause its subcontractors to protect carefully all work and materials against damage or injury from the weather. If any Work or materials shall be damaged or injured by reason of failure on the part of the Contractor or any of his subcontractors to so protect the Work, such Work and materials shall be removed and replaced at the expense of the Contractor.

## 26. Protection of Property and Emergencies

a. The Contractor shall preserve and protect all structures, equipment, and vegetation (such as trees, shrubs, and grass) on or adjacent to the job site which are not to be removed and which do not unreasonably interfere with the Work required under this Contract. The Contractor shall only remove trees when specifically authorized to do so, and shall avoid damaging vegetation that will remain in place. If any limbs or branches of trees are broken during contract performance, or by the careless operation of equipment, or by workmen, the Contractor shall trim those limbs or branches with a clean cut and paint the cut with a tree-pruning compound as directed by the Owner.

b. The Contractor shall protect from damage all existing improvements and utilities (1) at or near the job site and (2) on adjacent property of a third party, the location of which are made known to or should be known by the Contractor. The Contractor shall repair any damage to those facilities, including those that are the property of a third party, resulting from failure to comply with the requirements of this Contract or failure to exercise reasonable care in performing the Work. If the Contractor fails or refuses to repair the damage promptly, the Owner may have the necessary work performed and charge the cost to the Contractor.

c. In the case of an emergency which is no fault of the Contractor or persons or parties whose acts or omissions are, or may be, chargeable under this Contract to the Contractor which threatens loss or injury of property and/or safety of life, the Contractor shall act, with or without previous instructions from the Owner, in a diligent manner. The Contractor shall notify the Owner immediately thereafter of the emergency and of any action taken. Any claim for compensation by the Contractor due to such extra Work shall be promptly submitted to the Owner for approval. The amount of compensation claimed by the Contractor on account of any emergency action shall be determined in the manner provided in Clause 44 of the General Conditions. Contractor shall provide a continuous operating method of contact with appropriate emergency services (such as “911”) that ensures a minimized notification period.

   Where the Contractor has not taken action but has notified the Owner of an emergency threatening injury to property and/or life or damage to the Work or any adjoining property, it shall act as instructed or as authorized by the Owner.

**27. Mutual Responsibility of Contractors**

If through acts of neglect or omissions on the part of the Contractor any other contractor or subcontractor shall suffer loss or damage, the Contractor agrees to settle with such other contractor or subcontractor by agreement if such other contractor or subcontractor will so settle. If such other contractor or subcontractor shall assert any claim against the Owner on account of any damages alleged to have been sustained as a result of acts or omissions on the part of the Contractor, the Owner shall notify the Contractor who agrees to indemnify, defend, and save harmless the Owner against any such claim.

**28. Subcontracting**

a. The Contractor may utilize the services of the specialty subcontractors on those parts of the Work which, under normal contracting practices, are performed by specialty subcontractors.

b. However, when the Contractor utilizes the services of specialty subcontractors it shall be responsible for coordinating the Work between subcontractors and between subcontractors and its own forces. The Contractor shall not let the divisions and sections of the specifications or the identification of any drawings control its division of the Work among subcontractors and/or suppliers.

c. Subsequent to the disclosure of subcontractors prior to award, a Contractor may replace a listed subcontractor if the subcontractor:

1. fails to comply with AS 08.18;
2. files for bankruptcy or becomes insolvent;
3. fails to execute a contract with the Contractor involving performance of the work for which the subcontractor was listed and the Contractor acted in good faith;
4. fails to obtain bonding;
5. fails to obtain insurance acceptable to the Owner;
6. fails to perform the contract with the Contractor involving work for which the subcontractor was listed;
7. must be substituted in order for the prime Contractor to satisfy required state and federal affirmative action requirements;
8. refuses to agree or abide with the Contractor's labor agreement; or
9. is determined by the Owner not to be a responsible subcontractor.

In addition, if a subcontractor on the list does not have a valid Alaska Business License and a valid Certificate of Registration under AS 08.18 at the time the bid was opened, the bidder may not use the subcontractor in the performance of the Contract, and shall replace the subcontractor with a subcontractor who had a valid Alaska Business License and a valid Certificate of Registration under AS 08.18 at the time the bid was opened.

d. If a Contractor fails to list a subcontractor or lists more than one subcontractor for the same portion of work and the value of that work is in excess of half of one percent of the total bid, the bidder shall be considered to have agreed to perform that portion of Work without the use of a subcontractor and to have represented the bidder to be qualified to perform that Work. A Contractor who attempts to circumvent the requirements of this section by listing as a subcontractor another contractor who, in turn, sublets the majority of the Work required under the Contract violates this section.

If a Contract is awarded to a Contractor who violates this section, the Owner may:

1. Cancel the Contract; or
2. After a notice and a hearing, assess a penalty on the Contractor in an amount that does not exceed 10 percent of the value of the subcontract at issue.

e. The Contractor shall be as fully responsible to the Owner for the acts and omissions of his subcontractors, and of the persons either directly or indirectly employed by them, as the Contractor is for the acts and omissions of persons directly employed by the Contractor.

f. In all subcontracts the Contractor enters into relative to the Work, the Contractor shall cause appropriate provisions to be inserted which will bind the subcontractors to the terms of this Contract, insofar as applicable to the Work of subcontractors and which will give to the Contractor the same powers that the Owner may exercise over the Contractor under any provisions of the Contract.

g. The Contractor shall insert in all subcontracts or agreements entered into as regards the Project, the clauses contained in the Contract and such other clauses as the Owner may, by written instructions, require and also a clause requiring the subcontractors to include these same provisions in any lower-tier subcontracts or agreements which they may enter into together with a clause requiring this insertion in any further subcontracts or agreements that may in turn be made.

h. Nothing contained in this Contract shall create any contractual relation between any subcontractor and the Owner. There are no intended third party beneficiaries to this Contract.

## 29. Separate Contracts

The Owner may undertake or award other contracts for additional work at or near the site of the Work under this Contract.

The Contractor shall coordinate its operations with those of other contractors and subcontractors. Cooperation shall be required in the arrangement for storing materials and in the detailed execution of the Work. The Contractor, including its subcontractors, shall keep informed of the progress and the detail work of other contractors and subcontractors and shall notify the Owner immediately of lack of progress or defective workmanship on the part of other contractors or subcontractors. Failure of the Contractor to keep informed of the Work progress on the job site and/or failure to give notice of lack of progress or defective workmanship by others shall be construed as acceptance by the Contractor of the status of the Work as being satisfactory for proper coordination with the Contractor's own Work.

## 30. Assignment of Component Contract by the Owner

The Owner may enter into separate contracts with various component contractors to perform work or supply materials or services for the Project. The Contractor will be informed in the Special Conditions of the scope of component work. At any time after execution of the Contract, the Owner, at its sole discretion, may assign its interests, rights, and responsibilities in one or more component contracts to the Contractor.

The Contractor shall include in its bid an amount as compensation to Contractor for all supervision, overhead, bonds, profit, and all other general expenses associated with the assumption of the Owner's interests, rights, and responsibilities in the assigned component contracts.

## 31. Special Consultants

In the event the Contractor is required in the prosecution of the Work to employ the service of special consultants to aid in the performance of the Work, such shall be at the Contractor's sole expense, the cost of which shall be deemed to have been included in the Contract sum.

## 32. Unit Prices as Contract Sum

In the event that unit prices are called for in the Bid Form, such prices shall include, and shall be deemed by the parties to this Contract to include; all costs as defined in Clause 22 of these General Conditions and such other factors as may apply together with overhead costs and profit. Payment for the Work performed shall be at the unit price amount for each item of Work accepted by the Owner and conforming to Contract requirements.

## 33. Owner-Furnished Materials

a. The Owner may elect to supply certain items of equipment, materials, or other goods to the Contractor for incorporation into the Project. When items are supplied under this Clause, the Contractor shall receive, off-load, haul, protect, store, and install such items in the Project as required by the Contract. A summary of Owner furnished items, their values, their locations or point of delivery to the Contractor, and, where applicable, a schedule of delivery shall be provided in the Special Conditions.

The Contractor shall include the following in its lump-sum bid:

1. The cost of technical direction, receiving, hauling, storing, handling, installing, and any other direct expenses required to incorporate the furnished items into the Project.
2. The cost of all indirect or other expenses associated with item 1 above, including but not limited to Contractor's supervision, overhead, insurance, bonds, and profit.

b. Title to all Owner-furnished material or property shall remain with the Owner. Unless otherwise provided in this Contract, the Contractor assumes the risk of, and shall be responsible for, any loss of or damage to Owner-furnished material provided under this Contract occurring after its delivery to Contractor. The Contractor shall include the value of the Owner-furnished materials under the All Risk Builder's Risk insurance in addition to the full Contract sum.

## 34. Stated Allowances

a. If called for on the Bid Form, the Contractor shall include cash allowances in its proposal for work or materials to be included in the Project. The amount(s) to be allowed, if any, are stated on the Bid Form and in the Special Conditions, together with a general description of the work or materials involved.

b. If the stated allowance or allowances are for design documents and complete specifications which are not available at the time of bid, subsequent to the award of this Contract, the Owner may, at its sole discretion, provide the Contractor with sufficient plans, specifications, and bidding documents to allow the Contractor publicly to solicit and obtain contract bids for the work or supply of the materials involved. On review and approval by the Owner, the Contractor shall enter into a subcontract with the lowest responsible bidder(s) on the form provided by the Owner with the bidding documents. If the actual subcontract price is more or less than the stated allowance provided by the Owner and included by the Contractor in its proposal, the Contract sum will be adjusted by modification accordingly. Thereafter, changes, if any, within the scope of the subcontract, subcontractor costs, subcontractor fees, and Contractor fees, shall be made as provided for under the Changes clause of the Contract.

c. The Contractor shall include in its bid an amount as compensation to Contractor for all supervision, overhead, bonds, profit, and all other expenses associated with the solicitation of bids by public advertisement, assistance to the Owner in bid evaluation and award, and subsequent administration and supervision of the subcontract(s) awarded pursuant to this Clause 34.

d. If the stated allowance or allowances are for technical direction of installation of Owner-furnished materials or equipment, the Contractor shall maintain an accurate record of allowed expenses and submit its accrued expenses monthly on its partial payment request, at which time it will be reviewed for payment. Should the actual expenses be more through no fault of the Contractor or less than the stated allowances provided by the Owner, the Contract sum will be adjusted by amendment accordingly.

**35. Periodic Payment to Contractor**

a. On the basis of estimates of Work performed during the preceding calendar month and approved by the Owner, the Owner will make progress payments to the Contractor; but to ensure the proper performance of this Contract, the Owner may at any time, at its sole option, retain up to ten percent (10%) of the amount of progress payments until final completion and acceptance of all Work covered by this Contract; provided, that on completion and acceptance of the Work or of each separate building, public work, or other division of the Work on which the price is stated separately in the Contract, payment may be made in full for that portion completed and accepted including retained percentages less authorized deductions or other provisions of the Contract.

b. Payment may be made for permanent materials associated with the Project and as yet not incorporated into the Work but which have been delivered to the job site and acceptably warehoused as approved by the Owner thereon, or delivered to and acceptably warehoused at an off-site storage location approved by the Owner. Invoices for permanent materials and equipment will be required identifying the Project and to whom shipped. An inventory record shall be kept of warehoused materials, including the location of said warehoused materials, and submitted with each request for payment showing materials incorporated into the Work for the previous pay period. Measurement of Work completed for payment purposes shall not include material and equipment warehoused at the site or at an off-site location.

c. All material and Work upon which periodic payments have been made shall thereupon become the sole property of the Owner, but this provision shall not be construed as relieving the Contractor from the sole responsibility for the care and protection of materials and Work upon which periodic payments have been made, or the restoration of any damaged Work, or as a waiver of the right of the Owner to require the fulfillment of all the terms of the Contract.

d. The Contractor agrees that he will indemnify and save the Owner harmless from all claims growing out of the lawful demands of subcontractors, laborers, workmen, mechanics, materialman, and furnishers of machinery and parts thereof, equipment, power tools, and all supplies, including commissary, incurred in the furtherance of the performance of this Contract. The Contractor shall, at the Owner's request, furnish satisfactory evidence that all obligations of the nature hereinabove designated have been paid, discharged, or waived. If the Contractor fails to do so, then the Owner may, after having served written notice to the Contractor, either pay directly unpaid bills, of which the Owner has written notice, or withhold from Contractor's unpaid compensation a sum of money, in addition to retainage, deemed reasonably sufficient to pay any and all such lawful claims until satisfactory evidence is furnished that all liabilities have been fully discharged, whereupon payment to the Contractor shall be resumed in accordance with the terms of this Contract. In no event shall the provisions of the preceding sentence be construed to impose any obligations upon the Owner to either the Contractor or his surety. In paying any unpaid bills of the Contractor, the Contractor agrees that the Owner shall be deemed the agent of the Contractor, and Contractor further agrees that any payment so made by the Owner shall be considered as a payment made under the contract by the Owner to the Contractor. The Owner shall not be liable to the Contractor for any such payment made in good faith.

e. On a form provided by the Owner, the Contractor shall prepare periodic payment requests. Three copies of the request, each signed separately by the Contractor, shall be delivered to the designated office of the Owner. The payment request shall be made out with the quantities or percentages previously approved by the Owner at the job site with assistance from the Contractor. Payment requests containing any inaccuracies or errors shall not be deemed submitted to the Owner and shall be promptly returned to the Contractor for correction and resubmission.

f. No materials or supplies for the Work shall be purchased by the Contractor or any subcontractor subject to any chattel mortgage or under a conditional sale contract or other agreement by which an interest is retained by the seller. The Contractor warrants that it has good title to all materials and supplies used in the work, free from all liens, claims, or encumbrances.

**36. Payment by Contractor**

The Contractor shall pay all persons supplying materials or service within eight (8) days after receipt of each payment from the Owner in accordance with AS 36.90, Article 3; the respective amounts allowed the Contractor on the approved monthly payment request for materials or Work performed or provided by all persons supplying materials or service to the extent of their interest therein; provided, however, that the Contractor may retain from the amount due any persons supplying materials or services a proportionate share of the amount, if any, retained by the Owner as provided for under Clause 35a. above; and provided further that the Contractor may also retain from the amount due any persons supplying materials or services any specific amount retained and identified by the Owner on the Periodic Payment Request as assignable to that persons supplying materials or service. In the event a person supplying materials or service is entitled to interest under AS 36.90, Article 3 on late payments or on amounts retained by the Contractor, the Contractor shall be solely responsible for satisfying claims for interest due on late payments and on amounts so retained. The Contractor expressly agrees to indemnify and hold harmless the Owner from any liability for interest payments due persons supplying materials or service on account of Contractor's late payments or on amounts retained by Contractor.

**37. Substantial Completion**

When the Contractor, by written notice to the Owner, certifies that the Work is Substantially Complete, the Owner and its representatives, within a reasonable time, will conduct an inspection to determine the actual status of completion. Approved Operation and Maintenance manuals shall be available at the time of Substantial Completion. See paragraph b. under "Acceptance, Release, and Final Payment" clause of these General Conditions for requirements. When the Owner, on basis of said inspection, determines that the Work is Substantially Complete for the use for which it was intended, it will then prepare a list of deficiencies to be corrected or completed by the Contractor and issue a Certificate of Substantial Completion. The failure to include any items on such list does not alter the responsibility of the Contractor to complete all Work in accordance with the Contract.

The Certificate of Substantial Completion shall establish a date of Substantial Completion, shall state the responsibilities of the Owner and Contractor for maintenance, heat, and utilities, and shall fix the time within which the Contractor shall complete the entire Project. All insurance, including but not limited to property insurance and All Risk Builders' Risk Insurance, shall be maintained by the Contractor until final acceptance. The Certificate of Substantial Completion shall be submitted to the Contractor for its acceptance, and to the architect/engineer for its approval prior to the Owner signing, all acknowledging the respective responsibilities assigned to them in such certificate. The Owner, if it elects, shall have the right to take Beneficial Occupancy of the Work after the date of Substantial Completion; however, it must allow the Contractor reasonable access to complete or correct items on the deficiency list.

**38. Use and Occupancy Prior to Substantial Completion**

The Owner shall have the right to take possession of or use any completed or partially completed part of the Work. Before taking possession of or using any Work, the Owner shall furnish the Contractor a list of items of Work remaining to be performed or corrected on those portions of the Work that the Owner intends to take possession of or use. However, failure of the Owner to list any item of Work shall not relieve the Contractor of responsibility for complying with the terms of the Contract. The Owner's possession or use shall not be deemed an acceptance of any Work under the Contract. While the Owner has such possession or use, the Contractor shall be relieved of the responsibility for the loss of or damage to the Work resulting from the Owner's possession or use. If prior possession or use by the Owner delays the progress of the Work or causes additional expense to the Contractor, an equitable adjustment shall be made in the Contract price or the time of completion, and the Contract shall be modified in writing accordingly.

**39. Acceptance, Release, and Final Payment**

a. Upon receipt of written notice from the Contractor that the Work is ready for final inspection and acceptance, the Owner will conduct a final inspection. If the Work is found to be in accordance with the terms and conditions of the Contract, the Owner will notify the Contractor in writing accepting the Work. Until such acceptance, the Contractor will be responsible for the Work covered by the Contract.

b. Prior to any final inspection (or Substantial Completion inspection, whichever is first) the Contractor will have previously submitted and have approved by the Owner, Operation and Maintenance (O&M) manuals. The O&M manuals will be in a form and shall contain such information as shall be directed by Owner.

c. Neither the final payment nor the remaining retained percentage shall become due or deemed submitted to the Owner until the Contractor shall provide the Owner with (1) a Waiver and Release of Liens, on forms provided by the Owner, executed by the Contractor; (2) a Consent of Surety to Final Payment; (3)verification from the Department of Labor to release final payment; and (4) if required by the Owner, other data establishing payment or satisfaction of all obligations incurred in completing the Project, to the extent and in such form as may be designated by Owner. If any subcontractor refuses to furnish a release or waiver as required by the Owner, the Contractor shall furnish a bond satisfactory to the Owner to indemnify the Owner against any such obligation. If any such obligation remains unsatisfied after all payments are made, the Contractor shall refund to the Owner all monies that the latter may be compelled to pay in discharging such obligation, including all costs and reasonable attorney's fees.

d. The making of final payment shall constitute a waiver of all claims by the Owner except those arising from:

1. unsettled liens;
2. faulty or defective Work appearing after completion.
3. failure of the Work to comply with the requirements of the Contract.
4. terms of any special guarantees required by the Contract.

e. The acceptance by the Contractor of final payment shall be and shall operate as a release of the Owner from all claims and all liability to the Contractor for all things done or furnished in connection with this Work and for every act and omission of the Owner and others relating to or arising out of this Work, except those claims of the Contractor previously made in writing and still unsettled. No payment, however, final or otherwise, shall operate to release the Contractor or its sureties from any continuing obligations under this Contract.

**40. General Guaranty**

a. Neither the final payment nor any provision in the Contract nor partial or entire occupancy of the Project by the Owner shall constitute an acceptance of Work not done in accordance with the Contract or operate to relieve the Contractor of liability with respect to any warranties or responsibility for faulty materials or workmanship. In addition to any other warranties in this Contract, the Contractor shall remedy any defects in the work which appear within a period of one year from the date the general guaranty commences, unless a longer period is specified and shall pay for any damage to other work resulting there from. The Owner shall give notice of observed defects with reasonable promptness.

b. The general guaranty shall commence upon Substantial Completion of the Work, as evidenced by the delivery to the Contractor of Owner's Certificate of Substantial Completion. If the Owner elects to take Beneficial Occupancy prior to Substantial Completion of the Work, the guaranty may only commence on those items of Work that are complete. The general guaranty as to Contractor's Work performed after Substantial Completion shall commence upon Owner's final acceptance, as evidenced by the delivery to the Contractor of Owner's written notice of acceptance.

c. The Contractor, when notified by the Owner, shall immediately place in satisfactory condition, in every particular, any of the guaranteed Work at no cost to the Owner. The Contractor's warranty with respect to Work repaired or replaced will run for one year from the date of repair or replacement.

d. If the Contractor fails to remedy any failure, defect, or damage within reasonable time after receipt of notice, the Owner shall have the right to replace, repair, or otherwise remedy the failure, defect, or damage at the Contractor's expense.

e. With respect to all warranties, express or implied, from subcontractors, manufacturers, or suppliers for Work performed and materials furnished under this Contract, the Contractor shall:

1. except as stated otherwise, obtain all warranties that would be given in normal commercial practice;

2. require all warranties to be executed, in writing, for the benefit of the Owner, if directed by the Owner; and

3. enforce all warranties for the benefit of the Owner, unless otherwise directed by the Owner.

**41. Interference with the Work**

Should the Contractor be prevented or enjoined from proceeding with Work either before or after the start of construction for any reason beyond the control of the Owner, the Contractor shall not be entitled to make or assert any claim for damages by reason of said delay; but time for completion of the Work may be extended to such reasonable time as the Owner determines will compensate for time lost by such delay. Such determination shall be set forth in writing.

**42. Suspension of Work and Delays**

a. The Owner may, for its convenience, order the Contractor in writing to suspend, delay, or interrupt all or any part of the Work for such period of time as it may determine to be appropriate.

b. If the performance of all or any part of the Work is suspended, delayed, or interrupted by the Owner as provided for in a. above, or by the Owner's failure to act within the time specified in this Contract, an adjustment shall be made for any increase in the cost of the Contract necessarily caused by such suspension, delay, or interruption, and the Contract modified as provided for under Clause 44 of these General Conditions. No adjustment shall be made under this Clause for any suspension, delay, or interruptions to the extent:

1. that the suspension, delay, or interruption of performance results from the fault or negligence of the Contractor.

2. for which an equitable adjustment is specifically provided for or excluded under any other provision of this Contract.

c. No claim under this Clause shall be allowed:

1. for any costs incurred more than ten (10) days before the Contractor shall have notified the Owner in writing of the act or omission involved (but this requirement shall not apply as to a claim resulting from a suspension order).

2. unless the claim, in an amount certain, is presented to the Owner in writing as soon as possible after the termination of such suspension, delay, or interruption, but in no event later than the date of final payment under the contract.

d. Any adjustment in Contract price made pursuant to this Clause shall be determined in accordance with the Price Adjustment Clause of this Contract.

**43. Differing Site Conditions**

a. The Contractor shall promptly, and before the following conditions are disturbed, give a written notice to the Owner of:

1. subsurface or latent physical conditions at the job site which differ materially from those indicated in this Contract, or

2. unknown physical conditions at the site of an unusual nature, which differ materially from those ordinarily encountered and generally recognized as inhering in the work of the character provided for in this Contract.

b. The Owner shall promptly investigate the site conditions after receiving the notice. If it finds that such conditions do materially so differ and cause an increase or decrease in the Contractor's cost of, or the time required for, performing any part of the Work under this Contract, whether or not changed as a result of the conditions, an equitable adjustment shall be made, and the Contract modified in writing accordingly.

c. No request by the Contractor for an equitable adjustment to the Contract under this Clause shall be allowed unless the Contractor has given the written notice required in a. above.

d. No request by the Contractor for an equitable adjustment to the Contract for differing site condition shall be allowed if asserted after final payment under this Contract.

**44. <u>Changes</u>**

a. The Owner may, at any time without notice to the sureties, by written order designated or indicated to be a change order, make any change in the Work within the general scope of the Contract, including, but not limited to, changes:

1. In the specifications (including drawings and designs).
2. In the method or manner of performance of the Work.
3. In the Owner-furnished facilities, equipment, materials, services, or job site.
4. Directing acceleration in the performance of the Work.

b. Any other written order or an oral order (which terms as used in this paragraph b. shall include direction, instruction, interpretation, or determination) from the Owner, which causes any such change, shall be treated as a change order under this Clause, provided that the Contractor gives the Owner written notice stating the date, circumstances, and source of the order and that the Contractor regards the order as a change order.

c. Except as herein provided, no order, statement, or conduct of the Owner shall be treated as a change under this Clause or entitle the Contractor to an equitable adjustment hereunder.

d. If any change under this Clause causes an increase or decrease in the Contractor's cost of, or the time required for the performance of any part of the Work under this Contract, whether or not changed by any such order, an equitable adjustment shall be made and the Contract modified in writing. However, except for an adjustment based on defective specifications, no adjustment for any change under paragraph b. of this clause shall be made for any cost incurred more than ten (10) days before the Contractor gives written notice as required. In the case of defective specifications, for which the Owner is responsible, the equitable adjustment shall include any increased costs reasonably incurred by the Contractor in attempting to comply with such defective specifications.

e. The Contractor must assert its right to an adjustment under this Clause, within thirty (30) days after receipt of a written change order under paragraph a. of this Clause, or the furnishing of a written notice under paragraph b. of this Clause, by submitting to the Owner a written statement describing the general nature and amount of proposal, unless this period is extended in writing by the Owner. The statement of proposal for adjustment may be included in the written notice by the Contractor required under b. above.

f. No proposal by the Contractor for an equitable adjustment hereunder shall be allowed if asserted after final payment under this Contract or if the Contractor fails to request an adjustment within the time and under the conditions set forth in e. above. As the Owners funds are fixed and limited, time constraints on notices will be strictly enforced.

g. In the event the Contractor agrees to the price for a change in the Work and the Owner has issued its acceptance and notice to proceed prior to execution of such a change order, it shall be entitled to receive only the amount of said price for the performance of such change in Work.

h. Any adjustment in Contract price made pursuant to this Clause shall be determined in accordance with the Price Adjustment Clause of this Contract.

**45. Disputes**

a. The Owner will be, in the first instance, the interpreter of the requirements of the Contract and the judge of the performance thereunder.

b. If the Owner has adopted regulations that are currently in effect concerning the procedure to be followed for the resolution of disputes and appeals arising out of claims regarding the performance or interpretation of construction contracts, such regulations apply, subject to the terms of this paragraph. All disputes arising out of or relating to this Contract shall be resolved as herein stated. To the extent that no process is applicable to a particular dispute or issue, Owner may determine a process. However, no claim may be processed under this Clause unless the underlying dispute was first promptly presented in writing to the appropriate contract manager for resolution under Clauses 42, 43, 44, or other applicable Clause(s) of these "General Conditions" or other controlling provision of the Contract. The term "promptly" shall mean the applicable time limit set forth in these "General Conditions" or other controlling provision in the Contract.

c. If an adjustment under clauses 42, 43, 44, or other applicable clause(s) of these "General Conditions" or under another controlling provision of the Contract is disallowed by a contract manager, the Contractor shall, within fourteen (14) days after receipt of the contract manager's disallowance of the adjustment, provide written notice to the cognizant Contracting Officer of the Contractor's intention to file a claim under this Clause. Within twenty one (21) days after receipt of the Contract Manager's disallowance the Contractor shall presents its claim as required herein.

d. As used herein, "claim" means a written demand or assertion by a party to the Contract seeking, as a matter of right, the payment of money, adjustment or interpretation of the Contract terms or other relief arising under or relating to the Contract.

e. In presenting the claim, the claimant shall specifically include the following:

1. The factual background surrounding the claim including accurate and complete supporting data.
2. The Contract provisions that apply to the claim and under which it is made.
3. The items and quantities, if any, upon which the claim is made.
4. The specific relief requested, including the additional compensation claimed and the basis upon which it is calculated and/or the additional time requested and the basis upon which it is calculated.
5. The specific exceptions to the Contract Manager's decision. The claimant shall certify that the claim is made in good faith, that the supporting data are accurate and complete to the best of its knowledge and belief, and that the relief requested accurately reflects the equitable adjustment for which it believes the Owner is liable.

f. The scope of the claim or remedy applicable to it may not include costs or attorney's fees associated with the claim or dispute.

g. Upon receipt of a claim under this Clause, the Contracting Officer shall request all parties to submit copies of pertinent papers and Contract Documents relating to the claim within a certain time. The Contracting Officer in his discretion may require any party to submit additional information, including a summary statement of the factual and legal basis of the claim.

h. Upon receipt of the relevant documents, the Contracting Officer shall determine:

1. Whether there is reasonable cause to believe that the Contractor has presented a valid claim against the Owner for which relief may be granted. If the claim is clearly fraudulent or the Contractor makes or uses in support of its claim a misrepresentation, the Contracting Officer shall proceed in accordance with AS 36.30.687 (b) (initiate a specific finding) which may result in the Contractor forfeiting all claims and reimbursing the Owner for all costs, or

2. If the undisputed facts clearly support a determination that the Contract Manager's decision was correct, then the Contracting Officer may adopt the Contract Manager's decision and send written notice to the Contractor of the Contracting Officer's decision to adopt and that this constitutes the Contracting Officer's written decision under paragraph j. of this Clause and that it is a final decision unless appealed in accordance with paragraph k.

i. In lieu of dismissing the claim, the Contracting Officer may attempt to resolve the claim by informal conference and conciliation with the parties. Upon receipt of a settlement documents signed by the parties, the Contracting Officer shall dismiss the claim.

j. If the claim cannot be dismissed or resolved informally within 30 calendar days after the Contracting Officer received the relevant documents, then the Contracting Officer shall within 90 calendar days issue a written decision. The Contracting Officer shall review the facts relating to the dispute and obtain, if necessary, assistance from legal, fiscal and other advisors. The Contracting Officer shall mail the decision to the Contractor by certified mail.

If the Contracting Officer does not issue a written decision within 90 calendar days or within such longer period as may be agreed upon by the parties, then the Contractor may proceed as if an adverse decision had been received.

k. Any party may appeal an adverse decision of a Contracting Officer under this Clause to the Chief Procurement Officer for Construction if filed within 14 calendar days after receipt of the Contracting Officer's decision or at the expiration of 90 days in the absence of a decision. A copy of the appeal shall be sent to the Contracting Officer.

l. A written notice of appeal to the Chief Procurement Officer for Construction need not be in any particular form. However, it must 1) evidence a desire to have the Chief Procurement Officer for Construction review the Contracting Officer's decision, 2) list specific factual and legal errors to the Contracting Officer's decision, and 3) be signed by the appellant or his authorized representative. General assertions that the Contracting Officer's decision is contrary to law or fact are not sufficient.

m. Within 15 calendar days after receipt of an appeal, the Chief Procurement Officer for Construction may adopt the Contracting Officer's written decision; otherwise, the Chief Procurement Officer for Construction shall, as soon as practicable, arrange a hearing in accordance with University of Alaska regulations and AS 36.30. The Chief Procurement Officer for Construction shall notify the Contractor of his or her decision to adopt the Contracting Officer's written decision and inform the Contractor that it may appeal this ruling to the Superior Court for the State of Alaska for a trial de novo.

n. At the conclusion of a hearing and within 30 days thereafter, the hearing officer, if other than the Chief Procurement Officer for Construction, shall make a written recommendation to the Chief Procurement Officer for Construction including findings of fact and conclusions of law. Upon due deliberation and within 60 days of receipt of the hearing officer's recommendation, the Chief Procurement Officer for Construction shall render a decision to affirm, reverse or modify the recommendation, or take other appropriate action. The Chief Procurement Officer for Construction's decision shall be set forth in writing and must articulate the basis for the decision. In the event the Chief Procurement Officer for Construction finds against the Contractor, he or she shall notify the Contractor that it may appeal to the Superior Court for the State of Alaska in accordance with the Alaska Rules of Appellate Procedure if it does so within 30 days from receipt of the Chief Procurement Officer for Construction's adverse decision.

o. The Contractor shall proceed diligently with performance of the Contract pending final resolution of any claim or request for relief and shall comply with any decision of the Contract Manager or Contracting Officer pending said final resolution.

**46. <u>Price Adjustment</u>**

a. Any adjustment in Contract price pursuant to Clauses in this Contract shall be determined, at the Owner's option, by one or more of the following methods:

1. By agreement on a fixed price adjustment for all reasonable costs before commencement of the pertinent performance;

2. By unit prices specified in the Contract or subsequently agreed upon;

3. By the actual direct cost to include the following:

a) Labor, including foremen;

b) Materials entering permanently into the Work;

c) The Contractor's ownership cost or rental charges at competitive rates of the construction plant and equipment during the time of use on the extra Work;

d) Power and consumables supplied for the operation of power equipment;

e) Insurance;

f) Social security and unemployment contributions.

4. In such other manner as the parties may mutually agree; or

5. In the absence of agreement between the parties, by a unilateral determination by the Owner of costs attributable to the event or situation covered by the Clause, all as computed by the Owner in accordance with general accepted accounting principles, plus appropriate fee, as determined herein.

6. Subject to any limitations prescribed elsewhere in the terms and conditions of the Contract, a reasonable fee for overhead and profit may be negotiated and included in any price adjustment under a. 1., 3., 4., and 5. by mutual agreement of the parties up to an amount not to exceed ten percent (10%) of the above actual direct costs incurred by the Contractor's own forces allocable to the price adjustment for overhead plus ten percent (10%) of the Contractor's direct costs, including overhead allocable to the price adjustment for profit. The cost of the subcontractor's Work shall be determined in the same manner. To the cost of subcontractor Work the Contractor, and any higher tiered subcontractor, may add an amount to be agreed upon but not to exceed ten percent (10%). The total fee shall be compensation to cover all indirect costs, profit and any other general expense except as follows: to the final price of the modification may be added the cost of payment and performance bonds, if appropriate. The amount added shall not be more than the product of the modification amount and the lowest stepped rate charged for payment/performance bonds based upon the Contract amount to date.

All proposals for price adjustment to the Contract including additions and deductions shall have itemized breakdowns of labor, materials, equipment, and other direct costs. Changes that include both monetary additions and deductions shall have the above fee computed only on the net direct cost addition; net deductive amounts or changes shall include a minimum five percent (5%) fee.

b. The Contractor shall submit cost or pricing data for any price adjustments and shall certify that, to the best of the Contractor's knowledge and belief, the data submitted is accurate, complete, and current prior to the beginning of negotiations or as of a mutually determined specified date and will continue to be accurate and complete during the performance of the Contract. Certification below a specified amount may be waived by the Owner. Any price increase in connection with this Contract by any significant amount because the data was inaccurate or incomplete shall be reduced and the Contract modified according to the Owner's regulations or FAR 52.215-22 whichever is applicable.

**47. <u>Right of the Owner to Terminate Contract</u>**

a. Default:

1. If the Contractor violates any material provision of the Contract, or if it should make an assignment for the benefit of creditors, file a petition of bankruptcy, or if a receiver should be appointed on account of Contractor's insolvency, or if the Owner determines that the Contractor has failed to supply an adequate working force or material of proper quality or quantity, or has persistently disregarded the written instructions of the Owner, or has refused or failed to prosecute the Work or any separable part thereof with such diligence as will result in its completion within the time specified in the Contract, or any extension thereof, or if the Contractor fails to complete said Work within such time, the Owner may terminate the Contractor's right to proceed with the Work.

2. If any grounds for termination exist, the Owner may give written notice to the Contractor and the Contractor's sureties that if specified defaults are not remedied within the time set forth in such notice, the Contractor's right to proceed with the Work will automatically terminate.

3. Upon such termination, the Owner may:

a) require the Contractor's sureties to complete the Work;

b) take over the Work directly; or

c) employ another contractor to complete the Work.

In any event, in completing the Work, the Owner or its representative may utilize any materials, tools, equipment, and appliances that are at the job site and necessary for its completion.

4. If the Owner terminates the Contractor's right to proceed, or if the Contractor abandons the Work and the Work is completed by another, the Contractor shall not be entitled to receive any portion of the amount to be paid under the Contract until the Work is fully completed. After completion, if the unpaid balance owed to the Contractor exceeds the sum of the amount paid by the Owner in finishing the Work plus all damages sustained, including but not limited to such liquidated damages as provided for in this Contract, the excess not required by the Contract to be retained shall be paid to the Contractor; but if such sum exceeds the unpaid balance, the Contractor and his sureties shall be liable to the Owner for the excess.

b. Convenience:

1. The performance of Work under the Contract may be terminated by the Owner in accordance with this Clause in whole or from time to time in part:

a) Whenever, for any reason, the Owner shall determine that such termination is in the best interest of the Owner. Any such termination shall be effected by delivery to the Contractor of a Notice-of-Termination specifying whether the termination is for the convenience of the Owner, the extent to which performance of Work under the Contract is terminated, and the date upon which such termination becomes effective.

2. After receipt of a Notice-of-Termination and except as otherwise directed by the Owner, the Contractor shall:

a) Stop Work under the Contract on the date and to the extent specified in the

Notice-of-Termination.

b) Place no further orders or subcontracts for materials, services, or facilities except as may be necessary for completion of such portion of the Work under the Contract as is not terminated.

c) Terminate all orders and subcontracts to the extent that they relate to the performance of Work terminated by the Notice-of-Termination.

d) Assign to the Owner, in the manner and to the extent directed by the Owner, all right, title, and interest of the Contractor under the orders or subcontracts so terminated. The Owner shall have the right, in its discretion, to settle or pay any or all claims arising out of such termination of orders and subcontracts, the cost of which would be reimbursable in whole or in part, in accordance with the provisions of the Contract.

e) With the approval or ratification of the Owner and to the extent it may require, which approval or ratification shall be final and conclusive for all purposes of this Clause, settle all outstanding liabilities and all claims arising out of such termination of orders and subcontracts, the cost of which would be reimbursable in whole or in part, in accordance with the provisions of this Contract.

f) Transfer title to the Owner (to the extent that the title has not already been transferred) and deliver in the manner, at the times, and to the extent directed by the Owner: (i) The fabricated or unfabricated parts, Work in process, completed Work, supplies, and other material produced as a part of or acquired with respect to the performance of the Work terminated by the Notice-of-Termination; (ii) the completed or partially completed plans, drawings, information, and other property which, if the Contract had been completed, would be required to be furnished to the Owner; and (iii) acquired or manufactured components for the performance of this Contract for the cost of which the Contractor has been or will be reimbursed under this Contract.

g) Use Contractor's best efforts to sell in the manner, at the time, to the extent, and at the price or prices directed or authorized by the Owner any property of the types referred to in f. above; provided, however, that the Contractor: (I) Shall not be required to extend credit for any sale, and (ii) may acquire any such property under the conditions prescribed by and at a price or prices approved by the Owner; and, provided further, that the proceeds for any such transfer or disposition shall be applied to reduce any payments to be made by the Owner to the Contractor under this Contract or shall otherwise be credited to the price or cost of the Work covered by this Contract or paid in such other manner as the Owner may direct.

h) Complete performance of such part of the Work as shall not have been terminated by the Notice-of-Termination.

i) Take such action as may be necessary or as the Owner may direct for the protection and preservation of the property related to this Contract which is in the possession of the Contractor and in which the Owner has or may acquire an interest.

The Contractor shall proceed immediately with the performance of the above obligations notwithstanding any delay in determining the adjustment of the amount of the fee, or any item, or reimbursable cost under this Clause. At any time after the effective date of termination as may be amended by the Owner from time to time, the Contractor shall submit to the Owner a list, certified as to quantity and quality, of any or all items of termination inventory not previously disposed of, exclusive of items the disposition of which has been directed or authorized by the Owner, and may request that Owner remove such items or enter into a storage agreement covering them. Not later than fifteen (15) days thereafter, the Owner may accept such items and remove them or enter into a storage agreement covering the same, provided that the list submitted shall be subject to verification by the Owner upon removal of items or, if the items are stored, within forty-five (45) days from the date of submission of the list, and any necessary adjustment to correct the list as submitted shall be made prior to final settlement.

3. After receipt of a Notice-of-Termination, the Contractor shall submit to the Owner its termination claim in the form and with the certification prescribed by the Owner. Such claim shall be submitted promptly but in no event later than six (6) months from the effective date of termination unless one or more extensions in writing are granted by the Owner upon request of the Contractor made in writing within such six-month period or any authorized extension thereof. However, if the Owner determines that the facts justify such action, it may receive and act upon any such termination claim at any time after such six-month period or any extension thereof. Upon failure of the Contractor to submit its termination claim within the time allowed, the Owner may, subject to any review required by the Owner's procedures or regulations in effect as of the date of execution of this Contract, determine on the basis of information available to it the amount, if any, due to the Contractor by reason of the termination and shall thereupon pay to the Contractor the amount so determined.

4. Subject to the provisions of paragraph 3 above and subject to any review required by the Owner's procedures or regulations in effect as of the date of execution of this Contract, the Contractor and the Owner may agree upon the whole or any part of the amount or amounts to be paid (including an allowance for the fee), if any, to the Contractor by reason of the total or partial termination of Work pursuant to this Clause. Upon agreement, the Contract shall be amended accordingly; and the Contractor shall be paid the agreed amount.

5. In the event of the failure of the Contractor and the Owner to agree in whole or in part as provided in paragraph above as to the amounts with respect to costs and fees, if any, to be paid to the Contractor in connection with the termination of Work pursuant to this Clause, the Owner shall, subject to any review required by the Owner's procedures in effect as of the date of execution of this Contract, determine on the basis of information available to it the amount, if any, due to the Contractor in connection with the termination and shall pay to the Contractor the amount determined as follows:

   a) If the settlement includes costs and fees:

      (i) There shall be included therein all costs and expenses reimbursable in accordance with this Contract and not previously paid to the Contractor for the performance of this Contract prior to the effective date of the Notice-of-Termination and such of these costs as may continue for a reasonable time thereafter with the approval of or as directed by the Owner, provided, however that the Contractor shall proceed as rapidly as practicable to discontinue such costs.

      (ii) There shall be included therein, as far as not included under 1 above, the costs of settling and paying claims arising out of the termination of Work under subcontracts or orders as provided in paragraph b.2.e above, which are properly chargeable to the terminated portion of the contract.

      (iii) There shall be included therein reasonable costs of settlement incurred by the Contractor, including but not limited to accounting, legal, clerical, and other expenses reasonably necessary for the preparation of settlement claims and supporting data with respect to the termination, together with reasonable storage, transportation, and other costs incurred in connection with the protection of termination inventory.

      (iv) If the terms of the Contract provide for a fee to be paid the Contractor, there shall be included in the settlement a portion of the fee determined at the Owner's option as follows:

      If the fee is expressed as a lump sum, there shall be paid a percentage of the lump sum equivalent to the percentage of physical completion of the Work for which the fee applies, less any fee payments made previously.

      If the amount determined under this subparagraph is less than the total fee payment theretofore made to the Contractor, the Contractor shall repay the excess amount to the Owner.

6. Any dispute arising from any determination made by the Owner under paragraph b.3 or b.5 above shall be resolved pursuant to Clause 45 of these General Conditions except that if the Contractor has failed to submit its claim within the time provided in paragraph b.3 above and has failed to request an extension of such time, the Contractor shall have no right to such resolution. In any case, where the Owner has made a determination of the amount due under paragraph b.3 or b.5 above, the Owner shall pay the Contractor the following: 1. If there is no right of resolution hereunder or if no timely resolution has been taken, the amount so determined by the Owner; or 2. if an appeal has been taken, the amount finally determined on such appeal.

7. In arriving at the amount due the Contractor under this Clause, there shall be deducted: 1. All advance or other payments applicable to the terminated portion of this Contract previously made to the Contractor; 2. the amounts of any claim that the Owner may have against the Contractor in connection with this Contract; and 3. the agreed price for, or proceeds of sale of, any materials, supplies, or other things acquired by the Contractor or sold pursuant to the provisions of this Clause and not otherwise recovered by or credited to the Owner.

8. In the event of a partial termination, the portion of the fee which is payable with respect to the Work under the continued portion of the Contract shall be equitably adjusted by agreement between the Contractor and the Owner and such adjustment shall be evidenced by an amendment to this Contract.

9. The Owner may, from time to time, under such terms and conditions as it may prescribe, make partial payments and payments on account against costs incurred by the Contractor in connection with the terminated portion of the Contract whenever, in the opinion of the Owner, the aggregate of such payments shall be within the amount to which the Contractor shall be entitled hereunder. If the total of such payments is in excess of the amount finally determined to be due under this Clause, such excess shall be payable by the Contractor to the Owner upon demand, together with interest computed at the rate of eight percent (8.0%) per annum, for the period from the date such excess payment attributable to a reduction in the Contractor's claim by reason of retention or other disposition of termination inventory until ten (10) days after the date of such retention or disposition, or such later date as determined by the Owner by reason of the circumstances.

**48. <u>Equal Employment Opportunity Requirements</u>**

a. For the term of this Contract, the Contractor shall comply with the Governor of Alaska Administrative Order #18 as amended, President of the United States Executive Order 11246 of September 24, 1965 as amended and specifically as follows:

1. The Contractor will not discriminate against any employee or applicant for employment because of race, color, religion, national origin, ancestry, sex, age, marital status, or mental or physical disability. The Contractor will take affirmative action to ensure that applicants are employed and that employees are treated during employment without regard to their race, color, religion, national origin, ancestry, sex, age, marital status, or mental or physical disability. Such action shall include, but not be limited to, the following: employment, upgrading, demotion, or transfer; recruitment or recruitment advertising; layoff or termination; rates of pay or other forms of compensation; and selection for training including apprenticeship. The Contractor agrees to post in conspicuous places available to employees and applicants for employment notices setting forth the provisions of this nondiscrimination clause.

2. The Contractor will in all solicitations or advertisements for employees placed by or on behalf of the Contractor state that all qualified applicants will receive consideration for employment without regard to race, color, religion, national origin, ancestry, sex, age, marital status, or mental or physical disability.

3. The Contractor will send to each labor union or representative of workers with which it has a collective bargaining agreement or other contract or understanding a notice advising the labor union or workers' representative of the Contractor's commitments under Section 202 of Executive Order No. 11246 of September 24, 1965, as amended, and shall post copies of the notice in conspicuous places available to employees and applicants for employment.

4. The Contractor will comply with all provisions of Executive Order No. 11246 of September 24, 1965, as amended, and of the rules, regulations, and relevant orders of the Secretary of Labor.

5. The Contractor will furnish all information and reports required by Executive Order No. 11246 of September 24, 1965, as amended, and by the rules, regulations, and orders of the Secretary of Labor, or pursuant thereto, and will permit access to his books, records, and accounts by the Owner and the Secretary of Labor for purposes of investigation to ascertain compliance with such rules, regulations, and orders.

6. In the event of the Contractor's noncompliance with the nondiscrimination clauses of this Contract or with any such rule, regulations, or orders, this Contract may be canceled, terminated, or suspended in whole or in part; and the Contractor may be declared ineligible for further contracts in accordance with procedures authorized in Executive Order No. 11246 or as otherwise provided by law.

7. The Contractor will include the provisions of paragraphs 1 through 7 in every subcontract or purchase order unless exempted by rules, regulations, or orders of the Secretary of Labor issued pursuant to Section 204 of Executive Order No. 11246 of September 24, 1965, as amended by Executive Order 11375 and supplemented in Department of Labor regulations (41 CFR Part 60) so that such provisions will be binding upon each subcontractor or vendor. The Contractor will take such action with respect to any subcontractor or vendor as may be directed by the Owner as a means of enforcing such provision including sanctions for noncompliance; provided, however, that in the event the Contractor becomes involved in or is threatened with litigation with a subcontractor or vendor as a result of such direction, the Contractor may request the Owner to enter into such litigation to protect the interests of the Owner.

b. The Contractor by submission of its bid on this Project and subsequently, if successful, by its signature on the Contract between the Owner and Contractor hereby certifies that it does not maintain or provide for its employees any segregated facilities at any of its establishments and that it does not permit employees to perform their services at any location under its control where segregated facilities are maintained. The Contractor certifies further that it will not maintain or provide for its employees any segregated facilities at any of its establishments and that it will not permit its employees to perform their services at any location under its control where segregated facilities are maintained. As used in this certification, the term "segregated facilities" means any waiting rooms, work areas, rest rooms and washrooms, restaurants and other eating areas, time clocks, locker rooms and other storage or dressing areas, parking lots, drinking fountains, recreation or entertainment areas, transportation, and housing facilities provided for employees which are segregated on the basis of race, color, religion, sex, or national origin, ancestry, age, marital status, or mental or physical handicap or disability because of habit, local custom, or otherwise. The Contractor agrees that it will obtain identical certifications for proposed subcontractor's vendor prior to award of subcontracts or purchase orders exceeding $10,000 that are not exempt from the provisions of the Equal Opportunity clause in a. above.

c. The Contractor (or first tier subcontractor) is herein advised of its obligation under 41 CFR 60-1.7: If it (1) has 50 or more employees and (2) has a contract with the Owner or subcontract on this Project amounting to $50,000 or more and has not filed with the Office of Federal Contract Compliance (OFCCP) in Anchorage, Alaska on or before the 31st day of March complete and accurate reports on Standard Form 100 (EEO-1), it shall do so within thirty (30) days after award to it of a contract. Forms may be obtained from the same office. In addition, if the Contractor meets the requirements under c. (1) and (2) above, he shall within 120 days of receipt of written Notice-of-Award develop and maintain for the term of this contract a written affirmative action compliance program until such time as it is not required by law or regulation to develop and maintain such a program.

d. The Contractor and subcontractors shall provide written notification to the appropriate OFCCP office within ten (10) working days of award of any construction contract in excess of $10,000 at any tier for construction work under this Contract. The Contractor and subcontractors holding contracts of $10,000 or more shall comply with a 28 percent minority manpower utilization goal in each of the following trades: Asbestos workers, Carpenters, Electricians, Ironworkers, Operating Engineers, Painters, Pile Drivers, Plumbers and Steam Fitters, Roofers, Sheet Metal Workers, and Teamsters. The Contractor and subcontractors shall not discriminate against any employee or applicant for employment because he or she is a disabled veteran, veteran of the Vietnam era, or handicapped person in regard to any position for which the employee or applicant for employment is qualified.

e. In accordance with Executive Order 11625, special efforts must be made to maximize the participation of Minority Business Enterprises (MBES). The Contractor agrees to award subcontracts to MBES to the fullest extent consistent with efficient performance of the Contract. If required by the Owner, the Contractor shall present records to the Owner evidencing the Contractor's efforts to solicit Minority Business Enterprises prior to the award of any subcontracts.

f. The Owner shall have recourse to the following sanctions and penalties for the Contractor's or subcontractor's failure to meet its affirmative action commitment:

   1. Cancel, terminate, suspend, or cause to be canceled, terminated, or suspended, any contract or subcontract relating to construction by the Owner or any portion or portions thereof for failure of the Contractor or subcontractor to comply with the affirmative action provisions of the Contract. Contracts may be canceled, terminated, or suspended absolutely, or continuation of the contract may be conditioned upon a program for future compliance approved by the Owner. (A.O. #18)

**49. <u>Alaska Statute Title 36</u>**

The provisions of Alaska Statute Title 36, Public Contracts, as amended and/or supplemented are hereby incorporated in the contract by this reference. Effective July 1, 2003, AS 36.05.045 requires the filing of a Notice of Work with the Department of Labor, payment of filing fees, and the filing of a Notice of Completion. The Contractor is advised that Compliance with AS 36 et seq. is mandatory with no change in the Contract sum.

**50. <u>Payrolls and Basic Records</u>**

a. The Contractor shall maintain payrolls and basic records for all laborers and mechanics during the course of the Work and shall preserve them for a period of three (3) years thereafter. Such records shall contain at a minimum the name and address of each such employee, his correct classification, rate of pay (including rates of contribution for, or costs assumed to provide, fringe benefits), daily and weekly number of hours worked, deductions made, and actual wages paid.

b. One certified copy of all payroll reports shall be submitted bi-weekly to the Owner. In addition, one certified copy of all payroll reports shall be submitted bi-weekly to the State Department of Labor, irrespective of applicable wage rates (State or Federal) in compliance with Alaska Statute 36.05.040, Filing Schedule of Employees, Wages Paid, and Other Information. The copy to the Owner shall be accompanied by a Statement of compliance certifying: (1) That the wage rates contained therein are not less than the current prevailing rates of pay issued by the Department of Labor in effect ten (10) days before the final date for submission of bids on this Contract or as modified every 24 months, (2) that no deductions have been made other than those permissible under the Copeland Act, (3) that the classifications set forth for each laborer or mechanic conforms with the work he or she performed, and (4) the wage rates contained therein are not less than the current prevailing rates of pay issued by the U.S. Department of Labor. The Contractor shall be responsible for the submission of certified copies of payrolls of all subcontractors.

c. The Contractor shall submit to the Owner such schedule of quantities and costs, progress schedules, reports, payrolls, estimates, records, and other data as the Owner may request concerning Work performed or to be performed under this Contract. The Owner's auditors, timekeepers, and inspectors shall be afforded access to all of the Contractor's books, records, correspondence, instructions, drawings, receipts, vouchers, subcontracts, memoranda, etc. relating to this Contract; and the Contractor shall preserve all such records for a period of three (3) years after Final Payment hereunder.

d. The Owner may audit the books and records of a Contractor or a subcontractor including material suppliers to the extent that the books and records relate to the performance of the Contract or any subcontract. Books and records shall be maintained by the Contractor for a period of three years after the date of final payment under the Contract and by the subcontractor for a period of three years after the date of final payment under the subcontract.

e. The Contractor shall insert in all subcontracts the requirements set forth in subparagraphs a., b., c., and d. of this Clause and also a provision that the subcontractors include these requirements in any lower tier subcontracts which they may enter into together with a provision requiring this insertion in any further subcontracts that may in turn be made.

## 51. Apprentices

Apprentices shall be permitted to work as such only when they are registered, individually, under a bona fide apprenticeship program registered with a state apprenticeship agency that is recognized by the Bureau of Apprenticeship and Training, United States Department of Labor, or under a program registered with the Bureau of Apprenticeship and Training, United States Department of Labor. The allowable ratio of apprentices to journeymen in any craft classification shall not be greater than the ratio permitted to the Contractor as to the Contractor's entire work force under the registered program. The Contractor or subcontractor will be required to furnish to the Owner written evidence of the registration of their program and apprentices as well as of the appropriate ratios and wage rates for the area of construction prior to using any apprentices on the Work.

## 52. Copeland (Anti-Kickback) Act

The Contractor shall comply with the Copeland "Anti-Kickback" Act (18 USC 874 and 40 USC 276c) and the Anti-Kickback Act of 1986 (41 USC 51-58) and Regulations of the Secretary of Labor (29 CFR, Part 3) that are herein incorporated by reference. The Contractor shall comply with any amendments or modifications to this Act or these regulations and shall be responsible for the submission of affidavits required of subcontractors.

## 53. Overtime Compensation

a. No Contractor or subcontractor contracting for any part of the Work which may require or involve the employment of laborers or mechanics, including watchmen and guards, shall require or permit any laborer or mechanic in any work week in which he is employed on such Work to work in excess of eight hours in any calendar day or in excess of forty (40) hours in such work week unless such laborer or mechanic receives compensation at a rate not less than one and one half times his basic rate of pay for all hours worked in excess of eight hours in any calendar day or in excess of forty hours in such work week, as the case may be.

b. In the event of any violation of the requirements set forth in subparagraph a. above, the Contractor and any subcontractor responsible therefore shall be liable to any affected employee for such unpaid wages. In addition, such Contractor and subcontractor shall be liable to the Owner for liquidated damages. Such liquidated damages shall be computed with respect to each individual laborer or mechanic employed in violation of the requirements set forth in subparagraph a. above in the amount of $20 for each calendar day on which such employee was required or permitted to work in excess of eight hours or in excess of the standard work week of forty hours without payment of the overtime wages required by subparagraph a. above.

c. The Owner may withhold or cause to be withheld from any monies payable on account of Work performed by the Contractor or subcontractor such sums as Owner may determine to be necessary to satisfy any liabilities of such Contractor or subcontractor for unpaid wages and liquidated damages as provided in subparagraph b. above.

d. The Contractor shall insert in all subcontracts the requirements set forth in subparagraphs a., b., and c. of this Clause and also a provision that the subcontractors include these requirements in any lower tier subcontracts which they may enter into together with a provision requiring this insertion in any further subcontracts that may in turn be made.

**54. Minimum Wages**

All mechanics, laborers, and field surveyors employed by the Contractor or subcontractor under this Contract will be paid the higher of the current prevailing wage rates established by the State Department of Labor and the U.S. Department of Labor.

All mechanics, laborers, and field surveyors employed by the Contractor or subcontractor at the job site under this Contract will be paid unconditionally and not less than once a week and without subsequent deduction or rebate on any account, except such payroll deductions as are permissible under the Copeland Act, the prevailing rate of wages that were in effect ten (10) days before the final date for submission of bids for this Contract. The rate shall remain in effect for the life of the Contract or for 24 calendar months, whichever is shorter. At the end of the initial 24-month period, if new wage determinations have been issued by the department, the latest wage determination shall become effective for the next 24-month period or until the Contract is completed, whichever occurs first. This process shall be repeated until the Contract is completed. The scale of wages to be paid shall be posted by the Contractor in a prominent and easily accessible place at the job site. The Owner shall withhold so much of the accrued payments from periodic payments as is necessary to pay to laborers, mechanics, or field surveyors employed by the Contractor or subcontractor the difference between:

1. The rates of wages required by the Contract to be paid laborers, mechanics, or field surveyors in the Work.
2. The rates of wages in fact received by laborers, mechanics, and field surveyors on the Work.

If it is found that a laborer, mechanic, or field surveyor employed by the Contractor or subcontractor has been or is being paid a rate of wage less than the rate of wages required by the Contract to be paid, the Owner by written notice to the Contractor may terminate its right to proceed with the Work or the part of the Work for which there is a failure to pay the required wages and to prosecute the Work to completion by contract or otherwise; and its sureties are liable to the Owner for excess costs for completing the Work as a result of a violation of the provisions of this Clause.

**55. Employment Preference**

It is the policy of the State of Alaska that to fulfill the duty of loyalty owed to its citizens and to remedy social or economic problems, the State will grant an employment preference to residents when the State is acting as a market participant. The Contractor including its subcontractors for the duration of this Project shall comply with AS 36.10, Employment Preference, now in effect, and all regulations promulgated for its implementation currently in effect and those that may become in effect.

**56. Alaska Forest Products Preference**

In accordance with AS 36.15 and AS 36.30.322 whenever timber, lumber, and manufactured lumber products are required in this Project, only timber, lumber, and manufactured lumber products originating in this State from local forests shall be used wherever practicable. The Contractor for the duration of this Project shall purchase only timber, lumber, and manufactured lumber products harvested in this State whenever priced no more than seven percent above products harvested outside the State, available and of like quality when compared with timber, lumber, or manufactured lumber products harvested outside the State.

To meet this requirement the Contractor shall keep records documenting its solicitation efforts in obtaining Alaska Forest Products from suppliers listed with the Department of Community and Economic Development on its "Alaska Products Preference List". The Contractor shall provide the Owner with this record upon request, on the anniversary date of award and at the completion of the Contract. Failure to comply with this requirement or to provide records as required shall result in the Owner withholding all payments until compliance is met.

**57. Alaska Products and Recycled Alaska Products Preference**

When a Contractor designates the use of an Alaska Product or Recycled Alaska Product at bid opening in order to receive a preference, the Contractor must use the product or products designated. The Contractor shall keep records documenting its use of the Alaska Product or Recycled Alaska Product and provide the Owner these records upon request, on the anniversary date of the award and at the completion of the Contract.

If a Contractor who designates the use of an Alaska Product or Recycled Alaska Product in a bid fails to use the designated product for a reason within its control the Contract shall be reduced an amount equal to the percent preference it requested on the Alaska Product plus one percent of the value of the Alaska Product.

**58. Protection of Lives and Health**

In order to protect the lives and health of its employees under the Contract, the Contractor shall comply with all pertinent provisions of Alaska Statute 18.60 and with all pertinent provisions of the "Construction Safety Code" and "General Safety Code" issued by the Alaska Department of Labor and shall take or cause to be taken such additional measures as the Owner may determine to be reasonably necessary for this purpose. The Contractor alone shall be responsible for the safety, efficiency, and adequacy of its plant, appliances, and methods, and for any damage that may result from their failure or their improper construction, maintenance, or operation.

The Contractor shall provide all required environmental, safety and health oversight, training, equipment, materials supplies and documentation (including but not limited to Material Safety Data Sheets, training records, signage, and data) for their employees and subcontractors. Further, Contractor shall be solely responsible and accountable for all fines and penalties resulting from any environmental, health or safety violations by their employees or subcontractors that occurs while performing the Work.

**59. Clean Air and Water**

The Contractor shall comply with all regulations set forth in the Alaska Administrative Code (AAC) Title 18, Environmental Conservation, Chapter 50, Air Quality Control.

In addition, if the Contract amount exceeds $100,000:

a. The Contractor shall comply will all applicable standards, orders or requirements issued under Section 306 of the Clean Air Act (42 U.S.C. 1857(h), Section 508 of the Clean Water Act (33 U.S.C. 1368), Executive Order 11738, and EPA regulations (40 CFR Part 15) which prohibit the use under federal contracts or grants, facilities included on the Environmental Protection Agency (EPA) List of Violating Facilities.

b. The Contractor warrants that any facilities to be used in the performance of this Contract are not listed on the EPA List of Violating Facilities.

c. The Contractor will include a provision substantially the same as this, including this paragraph c. in every non-exempt subcontract.

**60. Hazardous Substances: Spills, Reporting & Communication Plan**

Title 18 of the Alaska Administrative Code Section 75.300 mandates the reporting of oil spills and hazardous material spills in a timely manner to the Department of Environmental Conservation (DEC). The Contractor may have responsibility under the law as the person in charge if an oil or hazardous spill occurs or is caused by any of its employees, suppliers or subcontractors. The Contractor, however, is responsible under this Contract to report any project related spills caused by its employees, suppliers or subcontractors within the time-lines given below to the Owner, Safety Officer and to its Project Representative in order for these persons to warn the Owner's employees, students and the general public on its property of a potentially hazardous condition. This Clause, or its effect, shall be in all of the Contractor's purchase orders, contracts and subcontracts and shall make each of the Contractor's subcontracted parties responsible to the Contractor as the Contractor is to the Owner.

The following chart shows the time-line for reporting of various size spills:

| Substance | Quantity | Spill on | Time to Report |
|---|---|---|---|
| Hazardous Material | Any Amount | Land or Water | Immediately |
| Oil | Less than 0.5 pints or causes Less than 100 SF sheen. | Water | 7 Days |
| Oil | Greater than 55 gals. or causes Greater than 1000 SF sheen. | Water | Immediately |
| Oil | Other than above | Water | 24 Hours |
| Oil | Less than 10 gals. | Land | 7 Days |
| Oil | Greater than 10 gals, but Less than 56 gals. | Land | 24 Hours |
| Oil | Greater than 55 gals. | Land | Immediately |

For all toxic or hazardous materials the Contractor uses in the performance of this Contract it shall have available a Material Safety Data Sheet (MSDS) as required under 8 AAC 15.0101 (g). For any of the "extremely hazardous substances" under the Superfund Amendments & Reauthorization Act (SARA) Title III used onsite, if the Hazard Rating Standard (NFPA 704M) is greater than zero (0) in any of the four categories (i.e. health, fire, special and reactivity) of hazardous substances, the Contractor shall be responsible for having onsite not only the Material Safety Data Sheet for each extremely hazardous substance, but a hazard communication program and plan for its employees to follow in the event of an accident. The Owner shall make available to the Contractor Material Safety Data Sheets for any toxic or hazardous substance under its control that the Contractor may encounter in its work under this Contract.

The contractor shall be responsible for all training, documentation, permits and activities associated with the introduction or generation of any hazardous wastes from its own activities and own materials utilized in the course of fulfilling this Contract.

**61. Laws Concerning University of Alaska**

This Contract is made and entered into under and subject to all provisions of the Constitution and laws of the State of Alaska and the United States of America governing, controlling, or affecting the Owner, or the operations or powers of the Owner. The Contractor shall perform the Contractor's agreements and undertakings entered into pursuant to the terms of this Contract in accordance with and subject to all the provisions of the Constitution and laws of the State of Alaska and the United States of America, it being specifically understood that all are, by this reference, hereby made a part of this Contract.

**62. Provisions Required by Law Deemed Inserted**

Each and every provision of law required by law to be inserted in this Contract shall be deemed to be inserted herein; and if through mistake or otherwise any such provision is not inserted or is not correctly inserted, then upon the request of either party, the Contract shall forthwith be physically amended to make such insertion or correction.

**63. Interest of Member of or Delegate to Congress**

No member of or delegate to Congress or state official shall be entitled to any share or part of this Contract or to any benefit that may arise there from, but this provision shall not be construed to extend to this Contract if made with a corporation for its general benefit.

**64. Other Prohibited Interests**

No official of the Owner who is authorized to act in such capacity on behalf of the Owner to negotiate, make, accept, or approve, or to take part in negotiating, making, accepting, or approving any architectural, engineering, inspection, construction, or material supply contract, or any subcontract in connection with the construction of the Project, shall become directly or indirectly associated personally except in his official capacity in this Contract or in any part hereof. No officer, employee, architect, attorney, engineer, or inspector of or for the Owner who is authorized to act in such capacity and on behalf of the Owner to exercise any legislative, executive, supervisory, or other similar functions in connection with the Construction of the Project shall become directly or indirectly interested personally except in his official capacity in this Contract, or any part thereof, or in any material supply contract, subcontract, insurance contract, or in any other contract pertaining to the Project.

**65. General Provisions**

a. United States Currency. All references to dollars in this Agreement refer to United States currency.

b. Time. Time is of the essence of this Agreement.

c. Waiver. The failure of any party to insist upon the strict performance of any provision of this Agreement or to exercise any right, power or remedy consequent upon a breach thereof shall not constitute a waiver by said party of any such provision, breach or subsequent breach of the same or any other provision.

d. Remedies. Except as otherwise expressly provided in this Agreement, the parties shall be entitled to any and all remedies provided by Law and all such remedies shall be cumulative.

e. Counterparts. This Agreement may be executed in any number of counterparts, each of which shall be deemed an original, and all of which, taken together, shall constitute a single agreement. This Agreement shall not become binding upon any party unless and until all parties have executed at least one counterpart of this Agreement.

f. Further Actions. The parties hereby agree to take any and all actions and execute, acknowledge and deliver any and all documents reasonably necessary to effect the purposes of this Agreement.

g. Modification of Agreement. This Agreement may be modified only by an instrument in writing duly executed by and delivered to all of the parties hereto.

h. Entire Agreement. The Contract Documents embody the entire agreement and understanding between the parties and supersedes all prior agreements and understandings, whether written or oral, relating to the subject matter hereof.

i. Law Governing. This Agreement shall be interpreted and construed in accordance with, and governed and enforced in all respects by, the laws of the State of Alaska, and any litigation arising pursuant to this Agreement shall only be brought after exhausting all administrative remedies in the Alaska Superior Court for the Fourth Judicial District, in Fairbanks, Alaska.

j. Severability. If any provision of this Agreement or any application thereof shall be found to be invalid or unenforceable by a court of competent jurisdiction, the remainder of this Agreement and any other application of such provision shall remain valid and be interpreted to effectuate the purposes of the agreement as a whole.

k. Binding Effect. The rights, obligations and liabilities set forth in or arising under this Agreement shall extend to, be binding upon, and inure to the benefit of the parties and their respective successors and assigns.

l. Paragraph Headings. The descriptive paragraph headings throughout this Agreement are for convenience and reference only, and the words contained therein shall not be held to expand, modify, amplify or aid in the interpretation or construction of this Agreement.

m. Interpretation of the Agreement. This Agreement is the result of a public process in which Contractor had a full and unrestricted right to examine this Agreement before submitting its proposal or bid for this Agreement and prior to executing it and accordingly this Agreement shall not be construed against the drafting party.

n. Relationship of the Parties. Nothing in this Agreement shall be construed to make the Owner an agent, a partner, or a joint venturer with the Contractor.

o. Exhibits. All Exhibits to this Agreement are adopted by reference and incorporated herein as if fully set forth in this Agreement.

p. Survival. Any obligation under this Agreement arising before such expiration or termination, shall survive the expiration or termination of this Agreement. Notwithstanding any other provision contained herein, until the Contractor's obligations pursuant to Clause 19 of this Agreement are fully satisfied, all of Contractor's obligations to insure and indemnify the Owner shall continue.

q. Capitalized Terms. Unless a contrary meaning is clearly intended, terms that begin with capitalized letters shall have the meaning provided in Clause 1 or, if not defined in Clause 1, as explained in the contract. If a term is not capitalized, it shall have the meaning attributed to the term in common usage in the context in which it is used.

END OF GENERAL CONDITIONS

# SPECIAL CONDITIONS

SC-01 **Time for Completion**: The work which the Contractor is required to perform under this Contract shall be commenced on the date stipulated by the Owner in the Notice-of-Award to the Contractor. Contractor shall have access to the project site on **May 15, 2017**.

Substantial Completion shall be achieved on, **August 15, 2017**.

SC-02 **Liquidated Damages:** Liquidated damages will be assessed in the amount of **$500.00** per day for each calendar day of delay beyond the date of Substantial Completion as stated in SC-01 or any extensions thereof which may be granted pursuant to the General Conditions.

SC-03 **Professional Liability:** This project does not require professional liability insurance.

SC-04 **Change GC 13.e.4 Builder's Risk Insurance:** All Risk Builder's Risk Insurance is not required.

SC-05 **Permits**: The Contractor shall procure and pay for all permits, licenses and approvals as per General Conditions 14.a. **The Owner will pay for Plan Review fees only.**

SC-06 **Camping:** There will be no camping or overnight stays allowed on University Property.

SC-07 **Salvage:** The Owner, at its sole option, may direct that salvage and/or surplus materials be delivered unloaded and stored on the Owner's property. Such place of storage will be within a five (5) mile radius of the project site. Surplus materials shall not be sold or transferred to University of Alaska employees.

SC-08 **Smoking:** There is to be no smoking on or in UAA Buildings.

Effective November 19, 2015 the University's policy is as follows:

*A. Prohibitions*

*Smoking and the use of all tobacco and tobacco-related products are prohibited within all university real property, buildings and vehicles. Littering an area with, or with the remains of, tobacco-related or smoking-related products is also prohibited. This prohibition applies to all university events, events held on university grounds or property and applies to all members of the university community including faculty, staff, students, friends, volunteers, patients, customers, vendors, contractors, guests and visitors.*

*B. Definitions*

*1. "contractor" means anyone contracted to do work at a university site or property.*
*2. "smoking" means inhaling, exhaling, burning, or carrying of any lighted or heated or vaporized tobacco-related product or non-tobacco plant product, or operating an electronic smoking or vaping device, instrument or apparatus which can be used to simulate the experience of smoking, or which can be used to house a liquid containing*

*nicotine for delivery in any form to the user, including but not limited to hookahs, water pipes, e-cigarettes, e-cigars, e-pipes, and vape pens.*
*3. "tobacco" and "tobacco-related products" include all forms of tobacco, including but not limited to cigarettes, cigars, pipes, kreteks, bidis, other inhalable burning substances and all smokeless tobacco and tobacco-containing products.*
*4. "tobacco use" includes inhaling, smoking, sniffing, chewing, dipping, or any other assimilation of tobacco products.*
*5. "university real property and buildings" includes buildings, trailers, facilities, campus grounds, athletic facilities, university vehicles, exterior open spaces, covered walkways, breezeways, walkways between sections of buildings, trails, exterior stairways and landings, recreational areas, university-owned parking lots, driveways, loading docks, university-owned streets, shuttle bus stops, sidewalks within all university campuses, and all property that is owned, operated, leased, occupied or controlled by the university except as specified below.*
*6. "vendor" means anyone providing goods or services on university property or grounds.*

*C. Exclusions*

*The prohibition in this regulation shall not apply in the following situations, to the extent that smoking or the use of tobacco or tobacco-related products is otherwise in conformity with applicable state, local and federal law:*

*1. Personally owned vehicles parked or being driven on the campus, provided that the vehicles are not within a university parking garage;*
*2. Public sidewalks or public rights-of-way that border a campus;*
*3. Use of a non-combustion nicotine product approved by the United States Food and Drug Administration for tobacco use cessation or harm reduction, as long as the product when used as instructed does not produce any vapors, fumes, smoke, gases, mists, particulates or other emissions in amounts significant enough to be detectable by third persons. This includes over-the-counter products (patches, gum, lozenges) and certain prescription products (nasal sprays, personal inhalers);*

*4. Areas within a fenced construction project in which the contractor has complete care, custody, and control of the job site, if the relevant contract explicitly authorizes the contractor to allow smoking within the site, provided that any smoking is to occur no less than 50 feet distant from the exterior fence.*

SC-09 **Discrepancy-Order of Precedence** In the event that any provision of one Contract Document conflicts with a provision of any other Contract Document, the provision of that Contract Document first listed shall govern, except as otherwise specifically stated:

a. This Agreement
b. Exhibits, attachments, etc. incorporated herein by reference.
c. Instructions to Bidders
d. The Special Conditions
e. Special written instructions to the Contractor, if any.
f. The General Conditions
g. Manufacturer's instructions with reference to approved materials.
h. The Technical Specifications.

i. The Contract Drawings

SC-10 **Project Management Software:** The University of Alaska (UAA) Facilties Planning and Construction (FP&C) department is currently utilizing **eBuilder**, a project management software to assist with document management. The contractor will be required to use this software. The contractor will be granted two (2 ea.) seats (users) giving them access to the software, subcontractors will not be provided seats. Training will be provided by UAA. The project management software will be used for but not limited to:

a. Architect's Supplement Instructions (ASI's)
b. Owner Change Directives
c. Requests for Information (RFI's)
d. Substitution Requests
e. Contractor's Daily Log
f. Payment Applications/Invoices
g. Potential Change Orders
h. Change Orders
i. Submittals

   Reference GC 00 70 00, Paragraph 17, Submittal Schedule. The submittal schedule will be completed on an excel document provide by UAA to the Contractor. The excel file will be submitted as outlined for review and upon approval will be imported into the project management software, which will formally establish the submittal register.

j. All other project documents

SC-11 **Parking:** The Owner will provide the GC with fifteen (15) temporary parking permits for their employees and subcontractors to park on campus from May 15th to September 7th, 2017.

SC-12 **Storage and Dumpster Areas:** The Owner has determined specific locations of where GC is to locate dumpster(s) and an area where the GC may provide a fenced off or coned off designated section for material storage or other needs. Map is attached as part of bid attachments (see Appendix A).

END SPECIAL CONDITIONS

This page intentionally left blank.

# Laborers' & Mechanics' Minimum Rates of Pay

For additional copies of this pamphlet go to:

http://labor.alaska.gov/lss/forms/pamp600-040117.pdf

Title 36. Public Contracts
AS 36.05 & AS 36.10
Wage & Hour Administration
Pamphlet No. 600

State of Alaska
Department of Labor and Workforce Development

Commissioner Heidi Drygas
Effective April 1, 2017
Issue 34

This page intentionally left blank.

# DIVISION 1

## UAA RAS WEIDNER CLASSROOM

## PROJECT NO. 17-0033

This page intentionally left blank.

# PART 1 GENERAL

## 1.01 SECTION INCLUDES

A. Description of Project

B. Owner Furnished Materials and Equipment

C. Work under other contracts

D. Assigned Contracts

E. Work Restrictions - Contractor use of premises and Owner occupancy

## 1.02 RELATED SECTIONS

A. General and Special Conditions

B. Technical Specifications Section.

## 1.03 SUBMITTALS

A. Prior to beginning work, provide a list of employees who will be working on the site.

B. Provide a list of Emergency contacts for after hour issues.

## 1.04 DESCRIPTION OF PROJECT

A. The Work includes the following items. The Contract Documents reflect the detailed scope of work.

1. General Work description: Demolition of partition walls and new construction, storefront, electrical, mechanical, and AV design.

B. The Contract Documents were prepared for the Project by:

Kumin Associates Inc.
808 E Street, Suite 200
Anchorage, AK 99501

C. The Work will be constructed under a single lump sum prime contract.

D. Contract Documents: The Contractor will be provided with one (1) set of conformed contract documents (if applicable) with the Notice to Proceed. The Contractor may, at his own expense, have additional sets reproduced from Owner's original.

1.05 OWNER SUPPLIED MATERIALS AND EQUIPMENT

A. Owner furnished equipment includes the following: None.

1.06 WORK UNDER OTHER CONTRACTS: None.

1.07 ASSIGNED CONTRACTS: None.

1.08 WORK RESTRICTIONS – CONTRACTOR USE OF PREMISES AND OWNER OCCUPANCY

A. BUILDING SECURITY: Provide for security of any area of the building turned over to the Contractor for his exclusive use. Security responsibility for areas that are partially or fully occupied by the Owner will remain with the Owner.

B. Prior to beginning work, provide a list of employees who will be working on the site.

C. Owner occupancy is described and shown on the matrix indicated on the Drawings.

D. Limit construction activities which generate noise levels in excess of NC=50, as sensed in occupied areas of the facility. Coordinate with Project Manager on occupancy periods.

E. The Owner will occupy portions of the facility during the entire period of construction for the conduct of his normal operations.

F. Maintain IBC complying access through corridors, stairways, and building exits to Owner occupied areas at all times.

G. While working in Owner occupied areas:

1. Cover and protect from dust and debris, at the start of each work day, electronic office equipment such as personal computer terminals, FAXs, copiers, printers, postage meters, monitors, etc. and electronic or sensitive research equipment. Remove protection at the end of each workday.

2. Do not use furniture, such as countertops, desks, filing cabinets, bookshelves, and tables as work surfaces or as steps to access Work.

3. At the end of each workday, move back to original location equipment and furniture moved to accommodate Work. Do not move electronic or sensitive equipment unless absolutely necessary to accomplish Work and only after obtaining approval from the Owner. Do not disconnect electronic equipment from data communications systems without Owner assistance.

4. Clean work areas, including floors with a vacuum, and remove tools, equipment, and construction material from work areas at the end of each workday.

5. Make existing systems fully operational for intended purpose during Owner occupied hours.

6. Provide temporary lighting, equal to that provided by the existing lighting system, whenever neither the existing lighting system nor the new lighting system is available to provide lighting equal to that provided by the existing system.

7. Provide temporary power, equal to that provided by the existing power system, when neither the existing power system nor the new power system is available to provide power equal to that provided by the existing power system.

8. Smoking and use of all tobacco and tobacco-related products are prohibited within all university real property and buildings. See Special Condition SC-08.

9. The use of alcohol is not permitted on University Property except in residential units by the occupants and their guests and in compliance with all state and local laws.

H. A sprinkler system serving a Work Area will not be considered to be complete until the fire alarm system supervision for that sprinkler system is also fully operational, tested and accepted.

I. It is recognized that completed work areas or work areas not yet available for construction may have to be accessed to accomplish Work associated with Work Areas currently under construction. In addition to requirements for working in Owner occupied areas stated elsewhere:

1. Coordinate access with the various trades requiring access to minimize disruption of Owner activities.
2. Schedule Work so that nearby offices and classrooms are not disrupted. Coordinate with the Owner.
3. Give written notice one week in advance of beginning Work in specific areas. Include with notice a schedule of the Work requiring access.
4. Replace ceiling tiles removed to access Work at the end of each workday.

J. Materials Storage and Protection: An area will be assigned to the Contractor for materials stored in the closest possible proximity to the project site. Providing protection and security for the area is the responsibility of the Contractor.

1. Any materials stored outside of the buildings being worked on under this contract will be kept in the designated storage area.
2. Materials will be stored in occupied buildings only in the locations as directed by the Owner.

END OF SECTION

This page intentionally left blank.

# PART 1 GENERAL

## 1.1 RELATED DOCUMENTS:

A. Drawings and general provisions of the Contract and Special Conditions and other Division 1 Specification Sections, apply to this Section.

## 1.2 SUMMARY

A. This section specifies administrative and procedural requirements for handling and processing Contract modifications.

B. Related sections include the following:

1. Division 1 Section "Product Requirements" for administration procedures for handling requests for substitutions made after Contract award.

## 1.3 MINOR CHANGES

A. Architect will issue through the Owner's representative supplemental instructions authorizing Minor Changes in the Work, not involving adjustment to the Contract Sum or the Contract Time.

## 1.4 PROPOSAL REQUESTS

A. Contractor Initiated Proposals: If latent or unforeseen conditions require modification to the Contract, Contractor may propose changes by submitting a request for change to the Owner's Representative. In addition, Contractor may prepare a request for change due to the Contract resulting from a response to a Request for Information (RFI).

1. Include a statement outlining reasons for the change and the effect of the change on the Work. Provide a complete description of the proposed change. Indicate the effect of the proposed change on the Contract Sum and the Contract Time.

2. Include a list of quantities of products required or eliminated and unit costs, with total amount of purchases and credits to be made. If requested, furnish survey data to substantiate quantities.

3. Indicate applicable taxes, delivery charges, equipment rental, and amounts of trade discounts.

4. Include costs of labor and supervision directly attributed to the change.

5. Include an updated Contractor's Construction Schedule that indicates the effect of the change, including, but not limited to, changes in activity duration, start and finish times, and activity relationship. Use available total float before requesting an extension of the Contract Time.

6. Comply with requirements on Division 1 Section "Product Requirements" if the proposed change requires substitution of one product or system for product or system specified.

B. Proposal Request Form: Use AIA Document G709 for Proposal Requests or an approved alternate form.

C. Owner-Initiated Proposal Requests: Architect through Owner's Representative will issue a detailed description of proposed changes in the Work that may require adjustment to the Contract Sum or the Contract Time. If necessary, the description will include supplemental or revised Drawings and Specifications.

1. Proposed Requests issued by Owner are for information only. Do not consider them instructions either to stop work in progress or to execute the proposed change.

2. Within time specified in Proposal Request, but not less than 20 days after receipt of Proposal Request, submit a quotation estimating cost adjustments to the Contract Sum and the Contract Time necessary to execute the change.

a. Include a list of quantities of products required or eliminated and unit costs, with total amount of purchases and credits to be made. If requested, furnish survey data to substantiate quantities.
b. Indicate applicable taxes, delivery charges, equipment rental, and amounts of trade discounts.
c. Include costs of labor and supervision directly attributed to the change.
d. Include an updated Contractor's Construction Schedule that indicates the effect of the change, including, but not limited to, changes in activity duration, start and finish times, and activity relationship. Use available total float before requesting an extension of the Contract Time.

1.5 CHANGE ORDER PROCEDURES

A. Upon Owner's approval of a Proposal Request, Owner's Representative may issue a Change Order for signature of Owner and Contractor.

1.6 CONSTRUCTION DIRECTIVE

A. Owner-Initiated Construction Directive: Owner's Representative may issue a Construction Directive (CD). Construction Directive instructs Contractor to proceed with a change in the Work, for subsequent inclusion in a Change Order.

1. Construction Directive contains a complete description of change in the Work. It also designates method to be followed to determine change in the Contract Sum or the Contract Time.

B. Documentation: Maintain detailed records on a time and material basis of work required by the Construction Directive.

1. After completion of change, submit an itemized account and supporting data necessary to substantiate cost and time adjustments to the Contract.

PART 2 PRODUCTS (Not Used)

PART 3 EXECUTION (Not Used)

END OF SECTION

This page intentionally left blank.

# PART 1 GENERAL

## 1.01 SECTION INCLUDES

A. Application for payment procedures.

## 1.02 RELATED SECTIONS

A. General Conditions

B. 01 33 00 - Submittal Procedures: Submittal requirements for the Schedule of Values.

C. 01 78 00 - Closeout Submittals: Final application for payment.

## 1.03 APPLICATION FOR PAYMENT PROCEDURES

A. Format of Periodic Estimate for Partial Payment: Use attached Periodic Estimate for Partial Payment form (included within the project manual) completed per instructions given during the pre-construction conference. An electronic version of the standard form may be prepared and used, subject to approval by the Owner.

1. Coordinate preapproved quantities and percentages with the Owner **prior** to formal submittal of the pay request. Provide a **draft** copy of the application for payment for review as a basis for prior approval.
2. Payment requests inconsistent with the preapproved quantities and percentages or that contain inaccuracies or errors, will be returned to the Contractor for correction and re-submittal.

B. Submit the following items with two (2) signed copies of the application for payment, with each of the items signed by the Contractor:

1. Project Schedule: arrow diagram (CPM) and tabulated schedules updated to show percentage completion of all work items in progress and current order of activities.
2. Certify that Project Record Documents, including As-Builts and Submittals, are current.

# PART 2 PRODUCTS (Not Used)

# PART 3 EXECUTION (Not Used)

END OF SECTION

This page intentionally left blank.

# PART 1 GENERAL

## 1.01 SECTION INCLUDES

A. Project Coordination Procedures

B. Project Meetings

1. Preconstruction Conference (by Owner)
2. Site Mobilization Meeting (by Owner)
3. Coordination Meetings (by Contractor)
4. Pre-installation Meetings
5. Monthly Progress Meetings (by Owner)
6. Safety Meetings (see Section 01 41 00, Site Safety Requirements)

C. Coordination of construction operations

D. Key checkout procedures

E. University Police Department Notifications: Alarm System Interruptions

F. Utility Interruption Notifications

G. Protection of Existing Facilities

## 1.02 RELATED DOCUMENTS AND REQUIREMENTS

A. General Conditions

## 1.03 PROJECT COORDINATION PROCEDURE:

A. The Owner shall be the Administrative Authority on this project and will issue all orders to the Contractor. The Architect/Engineer is responsible to the Owner for periodic architectural observation of the project. The Architect/Engineer is not authorized to make any changes in the Contract amount nor time for completion of the project. The Architect/Engineer may issue field memorandum to the Contractor for deficiencies in the work and for providing additional instruction and interpretation of the technical specifications and drawings. Any reference to Architect, Engineer, Contract Administrator, or any other related title shall be construed to be the designated representative as appointed by the Owner.

In pursuance of this contract, address all correspondence to the Owner's representatives in the following manner:

University of Alaska
Facilities Planning and Construction
Attn: Director
Project Name and Number
3890 University Lake Drive, Suite 110
Anchorage, Alaska 99508-4669
Telephone: 907.786.4900
Fax: 907.786.4901
E-mail: uaa_fpc@alaska.edu

B. The Architect/Engineer for this project is

Kumin Associates
808 E Street, Suite 200
Anchorage, Alaska 99501
Phone: 907.272.8833

C. Superintendence and Employees: In addition to General Condition, before starting work, the Contractor shall designate a competent authorized representative to represent and act for the Contractor, and shall inform the University in writing of the name and address of such representative, together with a clear definition of the scope of his authority to represent and act for the Contractor, and shall specify any and all limitations of such authority. Such representative shall be present or duly represented at the site of work at all times when work is actually in progress and, during periods when work is suspended, arrangements acceptable to the University shall be made for emergency work that may be required. The Contractor's authorized representative shall be supported by competent assistants, as necessary; and the authorized representative and his assistants shall be satisfactory to the University. All requirements, instructions and other Communications given to the authorized representative by the University shall be as binding if given to the Contractor.

None of the Contractor's superintendents, supervisors, or engineers shall be withdrawn from the work without due notice being given to the University; and no such withdrawal shall be made if it will jeopardize successful completion of the work.

The Contractor shall employ only competent and skilled men to perform any work. The Contractor shall be responsible for maintaining the orderly and faithful conduct of its employees.

The University may, in writing, require the Contractor to remove from the work any employee whom the University deems incompetent, careless, insubordinate, or otherwise objectionable or whose continued employment on the work is deemed by the University to be contrary to the University's interest.

The Contractor shall use local material, equipment, Subcontractors, and workers to the extent that they are reasonably available when, to do so, will not result in additional

expense to the Contractor.

1.04 PRECONSTRUCTION CONFERENCE

A. The Owner will schedule a preconstruction conference before construction starts, at a time convenient to the Owner and the Contractor, but no later than fifteen (15) days after execution of the Agreement. The conference will be held at the Project Site or another convenient location. The meeting will be conducted to review responsibilities and personnel assignments. The Owner will issue meeting minutes.

B. Attendees: Authorized representatives of the Owner, Architect, and their sub-consultants; the Contractor and its Project Superintendent; major subcontractors; and other concerned parties shall attend the conference. All participants at the conference shall be familiar with the Project.

C. Agenda: The Owner will prepare the agenda which may include the following items; (the Contractor may submit additional agenda items):

1. Designation of responsible personnel
2. Distribution of Contract Documents
3. Procedures for processing field decisions and Change Orders
4. Tentative construction schedule
5. Critical work sequencing
6. Submittal of Shop Drawings, Product Data, and Samples
7. Critical work sequencing
8. Preparation of record documents
9. Procedures for processing Applications for Payment
10. Weekly Coordination Meetings (Contractor)
11. Monthly Progress Meetings (Owner)
12. Use of the premises
13. Parking availability
14. Office, work, and storage areas
15. Equipment deliveries and priorities
16. Safety procedures
17. First aid
18. Security
19. Sexual Harassment Sensitivity
20. Housekeeping
21. Working hours

D. Meeting minutes: Owner, or the A/E under Owner direction, will document meeting; prepare and distribute meeting minutes within 48-hours of adjournment. Minutes will be typed, reflecting date, meeting number, list of attendees, and in a format to facilitate correction of previous meeting minutes. Distribution to be to all attendees and those affected by discussions or decisions made at meetings.

1.05 SITE MOBILIZATION MEETING, by Owner

A. Owner will schedule a meeting at the Project site prior to Contractor mobilization and

occupancy.

B. Attendees: Authorized representatives of the Owner, Architect, and their sub-consultants; the Contractor and its Project Superintendent, Quality Control Representative, and Safety person; major subcontractors; and other concerned parties shall attend the conference. All participants at the conference shall be familiar with the Project.

C. Agenda: The Owner will prepare the agenda, which may include the following items; (the Contractor may submit additional agenda items):

1. Use of the premises by Owner and Contractor
2. Parking availability
3. Temporary utilities provided by Owner
4. Office, work, and storage areas
5. Equipment deliveries and priorities
6. Safety procedures
7. First aid
8. Security
9. Sexual Harassment Sensitivity
10. Housekeeping
11. Working hours
12. Procedures for testing
13. Procedures for maintaining record documents
14. Requirements for start-up and commissioning
15. Inspection and acceptance of equipment put into service during construction period

D. Meeting minutes: Owner, or the A/E under Owner direction, will document meeting; prepare and distribute meeting minutes with 48-hours of adjournment.

Minutes will be typed, reflecting date, meeting number, list of attendees, and in a format to facilitate correction of previous meeting minutes. Distribution to be to all attendees and those affected by discussions or decisions made at meetings.

1.06 COORDINATION MEETINGS, by Contractor

A. Schedule and administer coordination meetings throughout progress of the Work at one-week intervals.

B. Location: Arrangements made by the Contractor at site mutually agreed upon by Contractor and Owner.

C. Attendance: Project Superintendent, major Subcontractors and Suppliers; Project Manager and others as appropriate to agenda topics for each meeting.

D. Agenda: Prepare agenda with copies for participants. Contractor shall notify the Owner's representative of any requested agenda items a minimum of 24 hours prior to meetings. Minimum Agenda to include the following:

1. Review minutes of previous meetings
2. Review of Work progress
3. Field observations, problems and decisions
4. Identification of problems which concern planned progress
5. Status of progress schedule and adjustments thereto
6. Planned progress during succeeding work period
7. Coordination of projected progress
8. Review of submittals schedule and status of submittals
9. Pending changes and substitutions
10. Review of off-site fabrication and delivery schedules
11. Status of RFI's
12. Maintenance of quality and work standards
13. Furnish copies of Safety Meeting Reports
14. Schedule and coordinate inspections
15. Utility interruptions
16. Other items affecting or relating to Work

E. Meeting minutes: Contractor to document meeting; prepare meeting minutes and distribute within 24-hours of adjournment. Minutes will be typed, reflecting date, meeting number, list of attendees, and in a format to facilitate correction of previous meeting minutes. Distribution to be to all attendees and those affected by discussions or decisions made at meetings.

1.07 PRE-INSTALLATION MEETINGS

A. Conduct a pre-installation conference at the Project Site before each construction activity that requires coordination with other construction. Definable features of work that require a Pre-Installation Meeting are listed in Section 01 40 00, Appendix A.

B. Attendees: The Installer and representatives of manufacturers and fabricators involved in or affected by the installation, and its coordination or integration with other materials and installations that have preceded or will follow, shall attend the meeting. Advise the Owner of scheduled meeting dates.

C. Review the progress of other construction activities and preparations for the particular activity under consideration at each pre-installation conference, including requirements for the following:

1. Contract Documents
2. Options
3. Related Change Orders
4. Purchases
5. Deliveries
6. Shop Drawings, Product Data, and quality-control samples
7. Review of mockups
8. Possible conflicts
9. Compatibility problems
10. Time schedules

11. Weather limitations
12. Manufacturer's recommendations
13. Warranty requirements
14. Compatibility of materials
15. Acceptability of substrates
16. Temporary facilities
17. Space and access limitations
18. Governing regulations
19. Safety
20. Inspecting and testing requirements
21. Required performance results
22. Recording requirements
23. Protection

D. Record significant discussions, agreements, and disagreements of each conference, and the approved schedule. Promptly distribute the record of the meeting to everyone concerned, including the Owner and the Architect.

E. Do not proceed with the installation if the conference cannot be successfully concluded. Initiate whatever actions are necessary to resolve impediments to performance of Work and reconvene the conference at the earliest feasible date.

1.08 MONTHLY PROGRESS MEETINGS, by Owner

A. The Owner may conduct a Progress Meeting a minimum of once each month to, among other things, review progress and arrive at approaches or solutions to problems.

B. Attendees: Project Superintendent and other key Contractor personnel, and major Subcontractors and Suppliers; Project Manager and others as appropriate to agenda topics for each meeting.

C. Agenda: Owner to prepare agenda with copies for participants. Owner's representative will notify the Contractor of any requested agenda items a minimum of 24 hours prior to meetings. Minimum Agenda may include the following:

1. Review minutes of previous meetings
2. Review of Project Schedule, as submitted by Contractor
3. Review of Periodic Estimate for Partial Payment
4. Review Quality Control plan
5. Review Safety Plan implementation
6. Identify Owner-requested changes in scope of work
7. Review Record Drawings

D. Meeting minutes: Owner, or the A/E under Owner direction, will document minutes; prepare and distribute meeting minutes with 48-hours of adjournment. Minutes will be typed, reflecting date, meeting number, list of attendees, and in a format to facilitate correction of previous meeting minutes. Distribution to be to all attendees and those affected by discussions or decisions made at meetings.

## 1.09 SAFETY MEETINGS

A. The Contractor shall conduct a Safety Meeting at least once a month for all supervisors on the project to review past activities, to plan ahead for new or changed operations, and establish safe working procedures for anticipated hazards. An outline report of each meeting shall be
submitted to the Owner.

B. The Contractor shall ensure that a weekly Safety Meeting is conducted by field supervisors, safety and health representative, or foremen for all workers. Maintain and provide copies to the Owner of an outline report of meeting giving date, time, attendance, subjects discussed and who conducted it.

## 1.10 COORDINATION OF CONSTRUCTION OPERATIONS

A. Identification of Contractor key personnel: Within two weeks of the Contract award, submit names of key Contractor and Subcontractor personnel. Key personnel are considered to include the Contractor's Project Manager; Project Superintendent; on-site Quality Control Representative; and Safety and Health person. Provide the following information:

1. Name and title
2. Duties and responsibilities
3. Resume describing experience and qualifications
4. Personal and professional references
5. Business address
6. Phone numbers - day, cellular, fax and after hours' numbers

B. Coordinate scheduling and timing of required administrative procedures with other construction activities to avoid conflicts and assure orderly progress of the Work.

C. Coordinate construction operations included in the Contract Documents to assure efficient and orderly installation of each part of the work. Coordinate the work of all the trades and subcontractors, including assigned subcontractors.

D. Where necessary, provide memoranda for coordination of Owner supplied materials and equipment or Work performed by the Owner.

## 1.11 KEY CHECKOUT PROCEDURES

A. Obtain key authorizations from the Owner's representative.

B. Pick up keys from the Owner's representative.

C. Turn in keys prior to Contract Closeout. Contractor will be assessed a fee of $500.00 for each lost key.

1.12 POLICE DEPARTMENT NOTIFICATION:

Notify the Owner's Representative a minimum of two (2) days prior to de-activating any fire detection or alarm system or any service to any building. The Owner's Representative will notify the Police Department. The Owner's Representative must also be notified when an alarm or detection system is reactivated. False alarms caused by the Contractor when proper notification has not been provided will result in a fine of no less than $250. If fire engines and personnel are dispatched, the fine will be determined by the Anchorage Fire Department based on actual costs incurred.

1.13 UTILITY INTERRUPTION NOTIFICATIONS

A. At least two weeks prior to the first outage, submit a schedule of all utility outages. Include proposed water, heat, gas, communications/data and electrical outages. The Contractor will not be bound by the entire schedule as originally submitted, but he will be expected to modify the schedule as required and, to the best of his ability, adhere to an accurate schedule as adjusted on a week-to-week basis.

B. The University reserves the right to determine the schedule of all utility outages. In general, outages will not be scheduled during normal business hours in academic, research, or administrative facilities, nor during peak load periods in housing facilities.

C. Specific written requests for utility system outages will be given as follows:

1. Communications/Data links - 4 full working days
2. Electrical and all other systems - 2 full working days.

PART 2 PRODUCTS (Not Used)

PART 3 EXECUTION

3.01 PROTECTION OF EXISTING FACILITIES

The Contractor shall include in its bid the cost to provide, and shall provide, the locating and protecting of the existing facilities of the Owner or any other public facilities whether or not such facilities be on the site of the work or in the public right-of-way.

A. The Contractor will preserve and protect all existing vegetation such as trees, shrubs, and grass on or adjacent to the site of work which is not to be removed and which does not unreasonably interfere with the construction work. Care will be taken in removing trees authorized for removal to avoid damage to vegetation to remain in place. Any lines or branches of trees broken during such operations or by the careless operation of equipment, or by workers, shall be trimmed with a clean cut and painted with an approved tree pruning compound as directed by the Contracting Officer.

B. The Contractor shall be responsible for protection of the foundations from frost and subsequent heaving of foundations. The Contractor shall provide grading, drainage, compaction and interior heat as may be required to protect foundations from frost heave and freezing damage.

C. The Contractor shall provide such temporary enclosures of the work and such space heating as may be required to protect work from damage due to freezing temperatures, snow, rain, and to allow orderly coordinated progress of all work.

D. The Contractor will protect from damage all existing improvements or utilities at or near the site of the work, the location of which is made known to him, and will repair or restore any damage to such facilities resulting from failure to comply with the requirements of this contract or the failure to exercise reasonable care in the performance of the work. If the Contractor fails or refuses to repair any such damages promptly, the Contracting Officer may have the necessary work performed and charge the cost thereof to the Contractor.

E. The Contractor shall coordinate the relocation of existing Public Utilities and associated infrastructure with the Municipality, Borough or Local Agencies.

END OF SECTION

This page intentionally left blank.

# PART 1 GENERAL

## 1.01 RELATED DOCUMENTS

A. Drawings and general provisions of the Contract, including General and Special Conditions and other Division 1 Specifications, apply to this Section.

## 1.02 SUMMARY

A. This Section includes administrative and procedural requirements for instructing Owner's personnel, including the following:

1. Preliminary Contractor Schedules
2. Contractors Construction Schedule.
3. Submittals Schedule.
4. Daily construction reports.
5. Material location reports.
6. Field condition reports.
7. Special reports.

B. Related Sections include the following:

1. Division 1 Section 01 29 00 "Payment Procedures" for submitting the Schedule of Values.
2. Division 1 Section 01 31 00 "Project Management and Coordination" for submitting and distributing meeting and conference minutes.
3. Division 1 Section 01 33 00 "Submittal Procedures" for submitting schedules and reports,
4. Division 1 Section 01 40 00 "Quality Control" for submitting a schedule of tests and inspections.

## 1.03 DEFINITIONS

A. Activity: A discrete part of a project that can be identified for planning, scheduling, monitoring, and controlling the construction project. Activities included in a construction schedule consume time and resources.

B. Cost Loading: The allocation of the Schedule of Values for the completion of an activity as scheduled. The sum of costs for all activities must equal the total Contract Sum, unless otherwise approved by Architect.

C. CPM: Critical path method, which is a method of planning and scheduling a construction project where activities are arranged based on activity relationships. Network calculations determine when activities can be performed and the critical path of Project.

D. Critical Path: The longest connected chain of interdependent actives through the network schedule that establishes the minimum overall Project duration and contains no float.

E. Float: The measure of leeway in starting and completing an activity.

1. Free float is the amount of time an activity can be delayed without adversely affecting the early start of the successor activity.
2. Total float is the measure of leeway in starting or completing an activity without element affecting the planned Project completion date.

F. Major Area: A story of construction, a separate building, or a similar significant construction element.

G. Milestone: A key or critical point in time for reference or measurement.

H. Network Diagram: A graphic diagram of a network schedule, showing activities and activity relationships.

1.04 SUBMITTALS

A. Submittal Schedule: Submit three copies of schedule. Arrange the following information in a tabular format:

1. Scheduled date for first submittal.
2. Specification Section number and title.
3. Submittal category (action or informational).
4. Name of subcontractor.
5. Description of the Work covered.

B. Preliminary Construction Schedule: Submit three opaque copies.

1. Approval of cost-loaded preliminary construction schedule will not constitute approval of Schedule of Values for cost-loading activities.

C. Contractor's Construction Schedule: Submit three opaque copies of initial schedule, large enough to show entire schedule for entire construction period.

D. Daily Construction Reports: Submit electronic copies at weekly intervals.

E. Material Location Report: Submit electronic copies at monthly intervals.

F. Field Conditions Report: Submit electronic copies at time of discovery of differing conditions.

G. Special Reports: Submit electronic copies at time of unusual event.

1.05 COORDINATION

A. Coordinate preparation and processing of schedules and reports with performance of construction activities and with scheduling and reporting of separate contractors.

B. Coordinate Contractor's Construction Schedule with the Schedule of Values, lists of subcontracts, Submittal Schedule, progress reports, payment requests, and other required schedules and reports.

1. Secure time commitments for performing critical elements of the Work from parties involved.
2. Coordinate each construction activity in the network with other activities and schedule them in proper sequence.

PART 2 PRODUCTS

2.01 SUBMITTALS SCHEDULE

A. Preparation: Submit a schedule of submittals, arranged in chronological order by dates required by construction schedule. Include time required for review, resubmittal, ordering, manufacturing, fabrication, and delivery when establishing dates.

1. Coordinate Submittals Schedule with list of subcontractors, the Schedule of Values, and Contractor's Construction Schedule.
2. Initial Submittal: Submit within 15 days of the Notice to Proceed. Include submittals required during the first 60 days of construction. List those required to maintain orderly progress of the Work and those required early because of long lead time for manufactured of fabrication.

   a. At Contractor's option, show submittals on the Preliminary Construction Schedule, instead of tabulating them separately.

3. Final Submittal: Submit concurrently with the first complete submittal of Contractor's Construction Schedule.

2.02 CONTRACTOR'S CONSTRUCTION SCHEDULE, GENERAL

A. Procedures: Comply with procedures contained in AGC's "Construction Planning & Scheduling."

B. Time Frame: Extend schedule from date established for the Notice to Proceed to date of Final Completion.

1. Contract completion date shall not be changed by submission of a schedule that shows an early completion date, unless specifically authorized by Change Order.

C. Activities: Treat each story or separate area as a separate numbered activity for each principal element of the Work. Comply with the following:

1. Activity Duration: Define activities so no activity is longer than 15 days, unless specifically allowed by Architect.
2. Procurement Activities: Include procurement process activities for the following long lead items and major items, requiring a cycle of more than 60 days, as separate activities in schedule. Procurement cycle activities include, but are not limited to,

submittals, approvals, purchasing, fabrication, and delivery.

3. Submittal Review Time: Include review and resubmittal times indicated in Division 1 Section "Submittal Procedures" in schedule. Coordinate submittal review times in Contractor's Construction Schedule with Submittals Schedule.
4. Startup and Testing Time: Include not less than 30 days for startup and testing.
5. Substantial Completion: Indicate completion in advance of date established for Substantial Completion, and allow time for Architects and Owner's Representative administrative procedures necessary for certification of Substantial Completion.

D. Constraints: Include constraints and work restrictions indicated in the Contract Documents and as follows in schedule, and show how the sequence of Work is affected.

1. Phasing: Arrange list of activities on schedule by phase.
2. Work by Owner: Include a separate activity for each portion of the Work performed by Owner.
3. Owner-Furnished Products: Include a separate activity for each product. Include delivery date indicated in Division 1 Section "Summary." Delivery dates indicated stipulate the earlier possible delivery date.
4. Work Restrictions: Show the effect of the following items on the schedule.

    a. Coordination with existing construction.
    b. Limitations of continued occupancies.
    c. Uninterruptible services.
    d. Partial occupancy before Substantial Completion.
    e. Use of premises restrictions.
    f. Provisions for future construction.
    g. Seasonal variations.
    h. Environmental control.

5. Work Stages: Indicate important stages of construction for each major portion of the Work, including, but not limited to, the following:

    a. Submittals.
    b. Mockups.
    c. Fabrication.
    d. Sample testing.
    e. Tests and inspections.
    f. Provisions for future construction.
    g. Seasonal variations.
    h. Environmental control.

E. Milestones: Include milestones indicated in the Contract Documents in schedule, including, but not limited to, the Notices to Proceed, Substantial Completion, and Final Completion, and the following interim milestones:

1. Phasing Milestones.
2. Building enclosure (Dried-In)

F. Cost Correlation: At the head of schedule, provide a cost correlation line, indicating

planned and actual costs. On the line, show dollar volume of the Work performed as of dates used for preparation of payment requests.

1. Refer to Divisions 1 Section "Payment Procedures: for cost reporting and payment procedures.
2. Contractor shall assign cost to construction activities on the CPM schedule. Costs shall not be assigned to submittal activates unless specified otherwise but may, with Architect's approval, be assigned to fabrication and delivery activities. Costs shall be under required principal subcontracts for testing and commissioning activities, operation and maintenance manuals, punch list activities, Project Record Documents, and demonstration and training (if applicable), in the amount of 5 percent of the Contract Sum.
3. Each activity cost shall reflect an accurate value subject to approval by Architect.
4. Total costs assigned to activities shall equal the total Contract Sum.

G. Contract Modifications: For each proposed contract modification and concurrent with its submission, prepare a time-impact analysis to demonstrate the effect of the proposed change on the overall project schedule.

2.03 PRELIMINRY CONSTRUCTION SCHEDULES

A. 60-Day Preliminary Schedule: Prior to any work conducted on-site a preliminary work schedule for the first 60 days of the planned activities, covering the initial work on-site. Schedule shall include mobilization, submittals, and all related start-up activities.

B. Two (2) Week Look-Ahead Schedule: Contractor shall prepare a two (2) week look ahead schedule for coordination of work and review by the Owner's Representative. Submit this schedule in conjunction with the bi-weekly progress meeting, and continue this submittal throughout the duration of construction. Submit in Bar-Chart format.

2.04 CONTRACTOR'S CONSTRUCTION SCHEDULE (CPM SCHEDULE)

A. General: Prepare network diagrams using AON (activity-on-node) format.

B. CPM Schedule: Prepare Contractor's Construction Schedule using a computerized, time-scaled CPM network analysis diagram for the Work.

1. Develop network diagram in sufficient time to submit CPM schedule so it can be accepted for use no later than 30 days after date established for the Notice to Proceed.

    a. Failure to include any work item required for performance of the Contract shall not excuse Contractor from completing all work within applicable completion dates, regardless of Architect's approval of schedule.

2. Establish procedures for monitoring and updating CPM schedule and for reporting progress. Coordinate procedures with progress meeting and payment request dates.
3. Use "one workday" as the unit of time. Include lists of nonworking days and holidays incorporated into the schedule.

C. CPM Schedule Preparation: Prepare a list of all activities required to complete the Work. Using the preliminary network diagram, prepare a skeleton network to identify probable critical paths.

1. Activities: Indicate the estimated time duration, sequence requirements, and relationship of each activity in relation to other activities. Include estimated time frames for the following activities.

    a. Preparation and processing of submittals.
    b. Mobilization and demobilization.
    c. Delivery.
    d. Fabrication.
    e. Utility interruptions.
    f. Installation.
    g. Work by Owner that may affect or be affected by Contractor's activities.
    h. Testing and commissioning.

2. Critical Path Activities: Identify critical path activities, including those for interim completion dates. Scheduled start and completion dates shall be consistent with Contract milestone dates.
3. Processing: Process data to produce output data on a computer-drawn, time-scaled network. Revise data, reorganize activity sequences, and reproduce as often as necessary to produce the CPM schedule within the limitations of the Contract Time.
4. Format: Mark the critical path. Locate the critical near center of network; locate paths with most float near the edges.

    a. Sub-networks on separate sheets are permissible for activities clearly off the critical path.

D. Initial Issue of Schedule: Prepare initial network diagram from a list of straight "early start-total float" sort. Identify critical activities. Prepare tabulated reports showing the following:

1. Contractor or subcontractor and the Work or activity.
2. Description of activity.
3. Principal events of activity.
4. Immediate preceding and succeeding activities.
5. Early and late start dates.
6. Early and late finish dates.
7. Activity duration in workdays.
8. Total float or slack time.
9. Average size of workforce.

E. Schedule Updating: Concurrent with making revisions to schedule, prepare tabulated reports showing the following:

1. Identification of activities that have changed.
2. Changes in early and late start dates.

3. Changes in early and late finish dates.
4. Changes in activity durations in workdays.
5. Changes in the critical path.
6. Changes in total float or slack time.
7. Changes in the Contract Time.

2.05 REPORTS

A. Daily Construction Reports: Prepare a daily construction report recording the following information concerning events ant Project site:
1. List of subcontractors at Project site.
2. List of separate contractors at Project site.
3. Approximate count of personnel at Project site.
4. Equipment at Project site.
5. Material deliveries.
6. High and low temperature and general weather conditions.
7. Accidents.
8. Meetings and significant decisions.
9. Unusual events (refer to special reports).
10. Stoppages, delays, shortages, and losses.
11. Emergency procedures.
12. Orders and requests of authorities having jurisdiction.
13. Change Orders received and implemented.
14. Construction Change Directives received and implemented.
15. Services connected and disconnected.
16. Equipment or system tests and startups.
17. Partial Completions and occupancies.
18. Substantial Completions authorized.

B. Material Location Reports: At monthly intervals, prepare and submit a comprehensive list of materials delivered to and stored at Project site. List shall be cumulative, showing materials previously reports plus items recently delivered. Include with list a statement of progress on the delivery dates form materials or items of equipment fabricated or stored away from Project site.

C. Field Conditions Reports: Immediately on discovery of a difference between field conditions and the Contract Documents, prepare and submit a detailed report. Submit with a request for interpretation.

PART 3 EXECUTION

3.01 CONTRACTOR'S CONSTRUCTION SCHEDULE

A. Contractor's Construction Schedule Updating: At monthly intervals, update schedule to reflect actual construction progress of activities. Issue schedule before each regularly scheduled progress meeting.

1. Revise schedule immediately after each meeting or other activity where revisions have been recognized or made. Issue updated schedule concurrently with the report

of each such meeting.

2. Include a report with updated schedule that indicates every change, including, but not limited to, changes in logic, durations, actual starts and finishes, and activity durations.
3. As the Work progresses, indicate Actual Completion percentages for each activity.

B. Distribution: Distribute copies of approved schedule to Architects, and Owner's Representative, separate contractors, testing and inspecting agencies, and other parties identified by Contractor with a need-to-know schedule responsibility.

1. Post copies in Project meeting rooms and temporary field offices.
2. When revisions are made, distribute updated schedules to the same parties and post in the same locations.

END OF SECTION

# PART 1 GENERAL

## 1.01 SECTION INCLUDES

A. General submittal requirements

B. Administrative Submittals

1. Project Schedule
2. Schedule of Values
3. Submittal Schedule and Shop Drawing Record
4. Contractor key personnel with afterhours contact numbers
5. Certified payrolls
6. Meeting minutes
7. Safety Plan and Reports

C. Certifications

D. Shop Drawings, Product Data and Samples

## 1.02 RELATED SECTIONS

A. General Conditions

B. Section 01 29 00 - Payment Procedures

C. Section 01 60 00 - Product Requirements and Substitutions

D. Section 01 78 00 - Closeout Submittals

## 1.03 GENERAL SUBMITTAL REQUIREMENTS

A. Review submittals for completeness and accuracy prior to submittal.

B. Submit a minimum of six identical submittals for review and acceptance by the Owner unless otherwise noted. Five copies will be retained by the Owner; three copies will be returned to the Contractor with comments or approval.

C. Submittals will be reviewed by the Owner and will be marked with one of the following:

1. No Exceptions Taken: Submittal conforms with information given in the Contract Documents.
2. Exceptions as noted: Submittal with the additional notations and corrections conforms with information given in the Contract Documents.
3. Revise and Resubmit: Submittal is incomplete or does not conform with information given in the Contract Documents. Resubmit in accordance with notations and corrections.
4. Rejected: Submittal is not in accordance with Contract Documents. Resubmit.
5. Information Only: Owner review of the submittal is not required. Owner will

return submittal without review.

1.04 ADMINISTRATIVE SUBMITTALS: Submittal summary sheets are not required for administrative submittals.

A. Schedule: Submit one pdf copy.

B. Schedule of Values (Bid Breakdown): Coordinate items with the Project Schedule. Coordinate subcontracted work, assigned contracts and allowances. Submit one pdf copy.

C. Submittal Schedule: Review the "Submittal Schedule and Shop Drawings Record" provided in this section for completeness against the original bid documents, add/delete submittal requirements required by addenda, and enter required submittal data. Submit one pdf copy.

1. Method for numeral identification for tracking and filing submittals shall be as follows:

a. Submittal numbers shall coordinate with specification sections.
b. Each submittal shall have a submittal number, i.e. "02830-1".
c. If submittal numbers are added to the schedule, use the next submittal number in the appropriate section.
d. Re-submittals shall be numbered as "02830-1A".

2. Substitutions SHALL be indicated as such in the "Remarks" column.

D. Contractor key personnel: Submit one copy of names and other information, for key personnel within thirty (30) days of Notice-of-award.

E. Contact Persons: Submit a list of emergency contact persons for the Contractor and Subcontractors, with normal-hours and after-hours phone numbers.

F. Certified payrolls: Submit one copy of the certified payrolls to Alaska Department of Labor.

G. Meeting minutes: Submit one copy of meeting minutes for meetings where the Contractor is identified as being responsible for that task. Submit meeting minutes to the Owner within 24-hours of the meeting.

H. Submit one copy of the Project Superintendent name and experience record.

1.05 TEST REPORTS AND CERTIFICATIONS:

Submit one copy of test reports and certifications in accordance with this section and the individual technical section. Test reports and certifications will not be returned to the Contractor.

## 1.06 SHOP DRAWINGS, PRODUCT DATA AND SAMPLES

A. Submittals are required for all materials of construction and all equipment specified and/or indicated on the drawings. Additionally, any item that is incorporated in the project work, whether or not listed on the submittal schedule, shall be submitted for review and approval when so requested by the Owner. A list of minimum submittals required is provided in each section and summarized in the "Submittal Schedule and Shop Drawing Record". These lists are not necessarily complete or all-inclusive and the Contractor is responsible for reviewing and correcting the Submittal Schedule and Shop Drawing Record and for complete submittals. Include materials and equipment indicated on the drawings but not listed in the specifications in the submittal volume of the most closely related division.

B. Coordinate submittals with requirements of work and of contract documents in such sequence to avoid delay in the work or work of other contracts. Submittals, which, in the opinion of the Owner, require examination with reference to other submittals not yet delivered may, at the Owner's discretion, not be examined until the undelivered submittals are received.

C. Review submittal prior to transmission; determine and verify field measurements, field construction criteria, manufacturer's catalog numbers, and conformance and completeness of submittal with requirements of contract documents.

D. The Contractor shall certify on the submittal that the information is complete and accurate and the proposed component service conforms to the contract. Failure to review and certify the submittal may be cause for the Owner to return the submittal without review.

E. The Contractor shall maintain at the work site one (1) reviewed and corrected copy of each submittal arranged in accordance with the specification format. Failure to maintain current reviewed and corrected submittals may be cause for Owner to not accept partial pay requests.

F. Do not fabricate products or begin work which requires submittals until the return of the submittal with the Owner's acceptance.

## 1.07 BINDING/ORGANIZATION

A. All electrical and mechanical submittals shall be bound in 3-ring slant "D" presentation ring binders, maximum 11-5/8" high and 11-1/4" deep. The spine, front and back shall be heavy virgin vinyl sealed over heavy board. The binders shall be provided with clear, full size pockets on the spine and front cover. The thickness of the contents shall not exceed 75% of the binder manufacturer's stated capacity.

B. All binders shall be blue in color and clearly and permanently labeled on the spine with:

Project Name
Project No.: _____
Submittal, Volume ___ of ___

Division No(s): _____
Building Name: _____
Building No.: _____

All binders shall be clearly and permanently labeled on the front cover with the following:

Project Name
Project No.: _____
Contractor: (Name, address, phone number)
Consultant:
Submittal, Volume ___ of ___
Discipline:_____
Specification Division(s): _____
Date: _____
Building Name: _____
Building No.: _____

C. All pages shall be 8 1/2" x 11" or 11" x 17" folded to 8 1/2" x 11" in such a way as to permit unfolding without removal from the binder.

D. The Electrical and Mechanical submittals shall be organized into the following five categories as a minimum:

1. Division 15
2. Division 16 (includes AV work)
3. Direct Digital Controls (DDC)
4. Fire Alarm
5. Sprinkler System

E. When separate volumes are required, the Contractor shall not separate a division into different volumes. (Exception: If a single Division binder would exceed 3 inches in width, it shall be further divided into multiple volumes.)

F. Simultaneous submittal of all volumes is not required. Unless otherwise indicated, further division of the submittal into separate volumes is not permitted.

G. Each volume shall contain the "Submittal Schedule & Shop Drawing Record" as an Index.

H. Each volume shall be sequentially tabbed consistent with the Index, identified on both sides of the plastic index tabs on heavy stock divider sheets.

I. Precede each item with a Submittal Summary Sheet (form provided by Owner). Each Submittal Summary Sheet shall be signed and dated by the Contractor to indicate review and compliance with specifications.

1.08 PRODUCT DATA

A. Submit only pages, which are pertinent; mark each copy of standard printed data to

identify pertinent products, referenced to specification section and paragraph number. Show reference standards, performance characteristics, and capacities; and required clearances.

B. Modify manufacturer's standard schematic drawings and diagrams to supplement standard information and to provide information specifically applicable to the Work. Delete information not applicable.

C. Material submitted shall indicate the specific item(s) proposed for this project.

D. Marking of items shall be by means of a black arrow. Highlighting is not acceptable.

1.09 SHOP DRAWINGS

A. Present in a clear and thorough manner. Label each drawing with Owner project name and project number. Identify each element of drawings by reference to sheet number and detail, schedule, or specification number of contract documents.

B. Shop drawings are required for any product which is not a standard commercial catalog product and which must be fabricated for or by the Contractor.

C. Shop drawings shall be clear, precise and with sufficient detail that the product can be fairly evaluated by the engineer.

D. The Contractor is responsible for the field fit and compatibility of the fabricated product. Identify field dimensions, show relationship to adjacent or critical features of work or products.

E. Furnish physical and performance data, including materials, manufacturers' name, model numbers, weights, sizes, capacities, finishes, colors, accessories and other data required to completely describe equipment and to indicate compliance with specifications and drawings.

F. Shop drawings shall include installation instructions.

G. Shop drawings shall be submitted for all major deviations from design. Major deviations shall be determined by the Owner.

H. Shop drawings shall be provided on transparencies, minimum 4-mil thickness. Drawing size shall be 8 1/2" x 11", 11" x 17", or 22" x 34".

1.10 SAMPLES

A. Submit full range of manufacturers' standard colors, textures, and patterns for selection by Owner. Do NOT submit samples that are not available. All samples become Owner's property; wiring and piping diagrams and controls; component parts; finishes; dimensions.

B. Submit samples to illustrate functional characteristics of the product with integral parts and attachment devices. Coordinate submittal of different categories for interfacing work.

C. Include identification on each sample, giving full information.

1.11 RESUBMITTALS

A. Submit a minimum of six identical copies of the re-submittal for review and acceptance by the Owner. Three copies of each re-submittal will be retained by the Owner; three will be returned to the Contractor with comments or approval.

B. Re-submittal to consist of three fully collated volumes plus five complete "inserts" to update the five volumes retained by Owner. Inserts to consist of complete submittal tab section, including an updated "Submittal Summary Sheet". All revisions for any one volume shall be resubmitted complete and at one time.

C. Update the "Submittal Schedule & Shop Drawings Record" (Index) with each re-submittal. Include a complete summary of all changes and additions made to the equipment review submittal since the previous submittal. Only those items included in the summary will be reviewed with the resubmitted package.

D. Each re-submittal of each volume shall be complete and shall contain all previously submitted material except that being replaced by new or revised material, which shall be removed. (Partial or improperly indexed or tabbed re-submittals shall be rejected without review or comment.)

PART 2 PRODUCTS (Not Used)

PART 3 EXECUTION (Not Used)

END OF SECTION

# PART 1 GENERAL

## 1.01 INTRODUCTION

A. The Contractor shall manage his operations in such a manner as to control the quality of all the work being performed to meet his obligation under the terms of this contract. He shall submit his Quality Control Plan for the system he proposes to use to effect this control within ten (10) days after the Notice of Award of the contract is received. Failure to have an accepted Quality Control Plan in place may be cause for the Owner to not accept the first Periodic Estimate for Partial Payment for execution. No construction is to be started until the plan has been accepted, unless specific written authority is granted by the Owner's Representative. Acceptance is conditional and will be predicated on satisfactory performance during construction.

B. Quality Control Coordination Meeting: Before start of work on the project, the Contractor shall meet with the Owner's Representative(s) and discuss the Contractor's Quality Control System. During the meeting, a mutual understanding of the system details shall be developed, including the forms for recording the Contractor quality control operations, control activities, testing, administration of the system for both on-site and off-site work, and the Owner's Quality Assurance Program. Minutes of the meeting shall be prepared by the Contractor within three working days. The minutes shall become a part of the contract file. There may also be occasion when subsequent conferences will be called to reconfirm mutual understandings.

## 1.02 QUALITY CONTROL (QC) PLAN

A. The QC Plan shall include as a minimum the following:

1. Description of the quality control organization, including lines of authority, responsibilities and coordinating procedures, of on-site/off-site quality control personnel, including those QC personnel not under direct control of the Contractor.
2. List of personnel designated by the Contractor to accomplish the quality control functions required by the contract. The Contractor shall designate a specific on-site Quality Control Representative, and submit his qualifications with the QC Plan along with a copy of the letter of delegation that defines delegated duties, authority and responsibilities.
3. Contractor's operational plan for accomplishing and reviewing work controls, fabrication controls, certifications, and documentation of quality control operations, inspections, and test records, including those for subcontractors.
4. An appendix with a copy of each checklist, form, report format, and similar record to be used in the implementation of the QC Plan.
5. Nondestructive testing requirements.
6. Identification of independent certifying and testing laboratories.

## 1.03 QUALITY CONTROL SYSTEM

A. Contractor's Quality Control System shall provide documentation ensuring that quality provisions of contract schedule, specifications, and drawings have been performed.

B. Contractor shall designate an individual within the on-site organization as the Quality Control Representative.

C. Control: Quality Control is the means by which the Contractor assures itself that its work complies with the requirements of the contract plans and specifications. Quality Control shall include at least one phase of control for all definable features of work. Definable features of the work for the project are attached as Appendix "A" to this Section.

NOTE to Manager: prepare Appendix "A" to assure that you get this level of QC on specific elements of work.

D. Preparatory Phase: The Contractor shall be required to convene a preparatory phase meeting three (3) days prior to beginning any definable feature of work. It shall include a review of contract requirements; a check to assure that all materials and/or equipment have been tested; a check to assure that provisions have been made to provide required testing; examination of the work area to ascertain that all preliminary work has been completed; and a physical examination of materials, equipment, and sample work to assure that they conform to submittal data and that all materials and/or equipment are on hand. The Owner's Representative or designee shall be notified at least 24-hours in advance of beginning any of the required action of the preparatory phase. The results of the preparatory phase actions shall be documented by separate record prepared by the Contractor's Quality Control Representative and forwarded to the Owner's Representative.

1.04 QUALITY CONTROL RECORDS

A. Contractor shall maintain a complete file of Quality Control records, and provide records to the Owner of each inspection and test performed throughout the life of the contract. Records shall include, but not be limited to, checklists, completed forms and reports and other factual evidence that the required inspections or tests have been performed, including type and number of inspections or tests involved, identification of operators and inspectors, result of inspections or tests, nature of defects, causes for rejection, proposed remedial action, and corrective actions taken. Quality Control records shall be available for examination by the Owner's Representative or his designee. Periodic Estimates for Partial Payment may be withheld if the Owner determines that the Contractor has failed to maintain Quality Control records as required.

B. Contractor shall ensure each record is identified and traceable to specific requirements in the specifications and drawings.

1.05 SPECIAL INSPECTIONS

A. Owner shall be responsible for all Special Inspections required by the Uniform Building Code. Contractor may utilize an independent Special Inspector at no additional cost to the contract.

1.06 QUALITY ASSURANCE

A. This program is the Owner's responsibility. Generally, the Owner will oversee the accepted Quality Control Plan to assure that it is being followed and properly implemented. Defects in the QC program shall be rectified immediately.

PART 2 PRODUCTS (NOT USED)

PART 3 EXECUTION (NOT USED)

END OF SECTION

This page intentionally left blank.

# PART 1 GENERAL

## 1.01 SUMMARY

A. This section establishes a **general** guide for preparation of the Contractors site safety work plan for this project. This guide is not intended to be inclusive of all necessary items to be included in the Contractors safety plan. In conjunction with these general requisite items, comply with all conditions of the pertinent provisions of federal OSHA safety standards and state specific standards adopted by the State of Alaska Department of Labor (ADOL). If there are any instances in this specification section that conflict or differ from those issued by the ADOL, ADOL will apply. This specification does not relieve the contractor in any way of any other reporting, documentation, verification, adherence or other requirements of the State of Alaska Dept. of Labor or federal OSHA standards.

B. Safety of Contractor's employees and persons on site is and shall remain the sole responsibility of the Prime Contractor for this project.

C. Related Sections:

1. General Conditions

## 1.02 SUBMITTALS

A. Submit at the time of the pre-construction conference the name and safety qualifications of the Contractor's safety and health person.

B. Submit Contractor's written accident prevention plan within 14 days of Notice of Award and prior to commencement of any work on the site.

C. Submit an outline agenda 5 working days preceding the supervisor's monthly safety meeting and meeting minutes within 5 days after the meeting.

D. Submit outline report of weekly safety meeting within 5 working days after the meeting.

E. Submit identified safety and health deficiencies and corrective measures weekly.

F. Submit a copy of the Contractor’s Lockout /Tagout procedures prior to implementation under this contract and in accordance with 29 CFR 1910.147(f)(2)(i). The purpose of this information is to educate UAA employees on the methodologies and equipment used by the contractor with regard towards hazardous energy control and isolation.

## 1.03 ACCIDENT PREVENTION AND SAFETY PLAN

A. No person shall be required to work in surroundings or under working conditions which are unsafe or dangerous to his/her health.

B. The Contractor shall be responsible for initiating and maintaining a safety and health

program, which will comply with the standards adopted by ADOL.

C. Prior to commencement of work at a job site and no later than 14 days after Notice of Award of contract, an acceptable accident prevention plan written by the prime contractor for the specific work and implementing in detail the pertinent requirements of the OSHA, will be reviewed for information only by the Owner. On contract operations, the contractor's plan will be job specific and will include work to be performed by subcontractors, and measures to be taken by the contractor to control hazards associated with materials, services, or equipment provided by suppliers. Consideration will also be made to cover the prevention of alcohol/drug abuse on the job.

D. The accident prevention plan shall provide for frequent and regularly scheduled safety inspections of the work sites, material, and equipment by the competent person. Identified safety and occupational health deficiencies and corrective measures shall be recorded and forwarded to the Owner weekly.

E. Each individual employee is responsible for complying with applicable safety requirements, wearing prescribed safety equipment, and preventing avoidable accidents and property damage.

1.04 INSTRUCTION AND TRAINING

A. Each employee shall be provided initial instruction and such continued safety training to enable them to perform their work in a safe manner.

B. Base instruction and training on the safety program of the contractor or university agency and shall include, but not be limited to:

1. General safety policy.
2. Requirements for employee and project safety.
3. Employee's responsibilities for property and safety of others.
4. Employee's responsibilities for reporting all accidents.
5. Medical facilities and required treatment.
6. Procedures for reporting or correcting unsafe conditions or practices.
7. Safe clearance procedures.
8. Firefighting and other emergency procedures.
9. Job hazard and activity hazard analyses and accident prevention plan.
10. Alcohol/drug abuse policy.
11. Segregation of vehicular and pedestrian traffic.

C. Provide further instruction and training sessions as required by the ADOL or OSHA for specific job tasks. Notify the Owner a minimum of three (3) working days in advance of the training so that they may attend.

1.05 ON THE JOB

A. Designate, to cover all hours of work at the project site(s), at least one competent or qualified safety and health person on site to manage the Contractor's Safety Program. The principal safety and health person shall report to and work directly for the contractor's top on-site manager, corporate safety office, or other high-level official of equivalent position. The safety and health person(s) shall have the authority to take immediate steps to correct unsafe or unhealthful conditions. The employment of a safety and health person(s) shall not abrogate the safety and health responsibilities of other personnel. This safety and health person shall be intimately familiar with and be responsible for direct input on the generation of the Contractor's written accident prevention plan. The safety and health person shall be the point of contact with the Owner for all matters regarding job site safety.

B. A "Competent" or "Qualified" person means one who can identify existing and predictable hazards in the working environment which are dangerous to personnel and has the authority to promptly eliminate them. This person is one who, by degree, certificate, professional standing, or extensive knowledge, training and experience has demonstrated his/her ability to resolve safety problems related to the work site.

C. Hold regularly scheduled safety meetings at least once a month for all supervisors on the project to review past activities, to plan ahead for new or changed operations, and establish safe working procedures for anticipated hazards. An outline report of each meeting shall be submitted to the Owner.

D. Hold at least one safety meeting weekly conducted by field supervisors, safety and health representative, or foremen for all workers. Maintain and provide copies to the Owner of an outline report of meeting giving date, time, attendance, subjects discussed and who conducted it.

1.06 ACCIDENT REPORTING AND RECORDKEEPING

A. All accidents which occur incident to an operation, project, or facility shall be immediately reported to the Owner.

On contract operations, the prime contractor shall be responsible for recording and reporting all accident exposure and experience incident to the work. (This includes exposure and experience of the prime contractor and of his subcontractors.) As a minimum, these records shall include exposure work-hours and a log of occupational injuries and illnesses. <u>All injuries and diagnosed occupational illnesses that result in a fatality or lost workday shall be reported to the Owner</u>.

Part 2 PRODUCTS (Not Used)

Part 3 EXECUTIONS (Not Used)

END OF SECTION

This page intentionally left blank.

# PART 1 GENERAL

## 1.01 SECTION INCLUDES

A. Power, Water, and Heat

B. Temporary Utilities

C. Temporary Enclosures and Space Heating

D. Parking

E. Pedestrian and Vehicle Traffic Control and Safety

F. Storage

## 1.02 RELATED DOCUMENTS AND REQUIREMENTS

A. General Conditions and Special Conditions

## 1.03 POWER, WATER, AND HEAT (PAID BY OWNER)

A. Electricity and water required for the performance of this Contract will be made available at no cost to the Contractor. The Owner cannot guarantee the point of connection to be in close proximity to the site of the work.

B. All temporary water connections, power connections, pipe, hose, cables, cords, etc., shall comply with current OSHA standards and pertinent safety directives and will be supplied and maintained by the Contractor. Provide all equipment, materials, and labor to connect, maintain, and disconnect temporary service.

C. Provide temporary equipment and fuel (if required) of sufficient number and size to maintain the temperature and ventilation requirements for Work, or a minimum temperature of 50 °F, whichever is higher.

D. Electric heaters are not permitted.

E. Non-vented or open flame heating/ventilating equipment are not permitted.

F. Conservation efforts must be exercised when utilizing Owner's water and power. If excessive waste is apparent, the use of Owner supplied utilities will be curtailed.

## 1.04 TEMPORARY OPERATION OF FACILITY'S NEW AND EXISTING MECHANICAL SYSTEMS

A. The facility's new and existing mechanical systems may be utilized for temporary heat and ventilation. The system or parts of the system utilized shall be complete in all respects prior to consideration of use.

B. Install indicated filters in all air-handling equipment, including cabinet unit heaters, placed in operation during construction. Install new filters during air balancing and again before acceptance of substantial completion by the Owner. The filters installed at the time of acceptance of substantial completion by the Owner may be those that were used during the air balancing process if these filters are removed once the balancing has been completed and the construction filters are reinstalled.

C. Install temporary one (1) inch thick roll filter media over all return and exhaust air intake grills and openings and over all fan intakes. Change filters as required and leave in place until the rooms or areas receive final cleaning for inspection.

D. When each piece of equipment is initially placed in service measure the motor current draw. If it exceeds the nameplate amperage (not service factor amperage), adjust fan and/or motor sheaves or pump balancing cocks to bring motor current draw below the full load current rating. If that is not possible, stop operation and notify the Owner.

E. Test, clean, and flush liquid systems prior to utilization.

F. Clean, repair, and lubricate piping, ductwork, equipment and accessories as required to return the systems to like new condition prior to substantial completion.

G. The Contractor retains all responsibility for providing required maintenance until acceptance of substantial completion by the Owner. Fuel and power consumed during temporary use of the facility's new mechanical systems will be paid for by the Owner. Take steps to conserve energy.

1.05 TEMPORARY UTILITIES

A. Temporary Ventilation: Provide temporary ventilation of enclosed areas to cure materials, to disperse humidity, and to prevent accumulation of dust, fumes, vapors and gases.

B. Site Lighting: Provide site lighting as required.

C. Construction Area Lighting – Provide general construction area lighting wherever work is in progress and wherever lighting is required for the safety of any person employed on the site.

D. Toilets and Sewage Disposal: There is no toilet or utility available on the site or available from the Owner. The Contractor shall include in its bid the cost of providing, and shall provide, all necessary toilets, including the cost of maintaining and cleaning them and dispensing of the effluent, and shall provide
such toilets to all personnel on the site. All sewage from whatever source shall be disposed of through the public sewage collection system, if available, or shall be discharged into holding tanks and then hauled from the site. The effluent from toilets shall not be discharged onto or into the ground.

E. Telephone: There is no telephone service available on the site or available from university facilities. The Contractor shall include in its bid the cost of providing, and shall provide, a separate single-party, non-coin operated telephone in his on-site office. Such telephone service shall be available until the work is completed. Each party using a telephone shall pay his own toll charges.

1.06 TEMPORARY ENCLOSURES AND SPACE HEATING:

Provide such temporary enclosure of the work and such space heating as may be required to protect the work from damage due to freezing temperatures, snow, rain and wind and to allow orderly, coordinated progress of work.

1.07 PARKING

The Contractor and his employees may park their vehicles in the University parking areas, on a space available basis. There will be no authorized parking in fire lanes and delivery lanes unless authorized by the Owner and then only for loading and unloading materials and debris for and from the project.

1.08 PEDESTRIAN AND VEHICLE TRAFFIC CONTROL AND SAFETY

A. The Contractor shall include in its bid the cost to provide, and shall provide, such barricades, signaling devices, signalmen, temporary signs, and all other facilities as may be necessary or required to control and/or accommodate pedestrian and vehicular traffic through or around the work of the Contractor on the campus or other property of the Owner.

B. The Contractor shall erect firm barricades around work on the campus or other property of the Owner restricting pedestrian traffic from the area. Lath and light plastic flagging are not acceptable. All materials of construction shall be within the barricades so established by the Contractor or the storage area assigned to him.

C. The Contractor shall protect building entrances from overhead dangers.

1.09 STORAGE

A. Site and Off-Site Storage: the Contractor shall include in its bid the cost to provide, and shall provide, such special security measures and warehousing as may be necessary to accomplish the work for which he is contractually responsible.

END OF SECTION

This page intentionally left blank.

# PART 1 GENERAL

## 1.01 SECTION INCLUDES

A. Product delivery, storage and handling

B. Product list submittal

C. Substitution requests

## 1.02 RELATED DOCUMENTS AND REQUIREMENTS

A. UA General Conditions

B. Section 01 33 00 - Submittal Procedures

C. UAA Forms – Substitution Request

## 1.03 PRODUCT DELIVERY, STORAGE AND HANDLING

A. Deliver, store, and handle products according to the manufacturer's recommendations, using means and methods that will prevent damage, deterioration and loss, including theft.

B. Schedule delivery to minimize long-term storage at the site and to prevent overcrowding of construction spaces.

C. Coordinate delivery with installation time to assure minimum holding time for items that are flammable, hazardous, easily damage, or sensitive to deterioration, theft, and other losses.

D. Deliver products to the site in an undamaged condition in the manufacturer's original sealed container or other packaging system, complete with labels and instructions for handling, storing, unpacking, protecting, and installing.

E. Inspect products upon delivery to ensure compliance with the Contract Documents and to ensure that products are undamaged and properly protected.

F. Store products at the site in a manner that will facilitate inspection and measurement of quantity or counting of units.

G. Store heavy materials away from the Project structure in a manner that will not endanger the supporting construction.

H. Store products subject to damage by the elements above ground, under cover in a weather-tight enclosure, with ventilation adequate to prevent condensation
Maintain temperature and humidity within range required by manufacturer's instructions.

1.04 SUBSTITUTION REQUESTS

A. Substitutions will only be considered after bid opening when deemed by the Owner to be in its sole interest. The Substitution Request Form is to be submitted for Owner consideration prior to inclusion in the formal submittal process. Include the following information:

1. Complete technical data and information to indicate product provides performance that will meet the specification.
2. Indicate if design changes will be required to incorporate product into the Work.
3. Impacts on other trades.
4. Cost proposal indicating cost savings.

B. The Owner will consider the request for substitution and advise the Contractor if the proposed substitution is accepted for formal submittal review. Items accepted will then be reviewed for technical compliance in the formal submittal review process. Substitutions will only be considered when submitted on the provided Substitution Request Form.

C. Substitutions SHALL be indicated as "Substitution" in the remarks column on the Submittal Schedule and Shop Drawing Record.

PART 2 PRODUCTS (Not Used)

PART 3 EXECUTION (Not Used)

END OF SECTION

# PART 1 GENERAL

## 1.01 SECTION INCLUDES

A. General Requirements

B. Structural Work

C. Operating Systems

D. Visual Requirements

E. Existing Warranties

## 1.02 RELATED DOCUMENTS

A. General Conditions and Special Conditions

## 1.03 GENERAL REQUIREMENTS

A. Repairs and Patching: The Contractor shall repair or patch all areas as required by his demolition and/or moving of materials and equipment. All patching and repairs shall match adjacent areas in texture, color, materials, and quality of workmanship. Refer to other Sections for specific requirements and limitations applicable to cutting and patching individual parts of the work.

B. SUBMITTALS

1. Cutting and Patching Proposal: Submit a proposal describing procedures well in advance of the time cutting and patching will be performed if the Owner requires approval of these procedures before proceeding. Request approval to proceed. Include the following information, as applicable, in the proposal:

a. Describe the extent of cutting and patching required. Show how it will be performed and indicate why it cannot be avoided.
b. Describe anticipated results in terms of changes to existing construction. Include changes to structural elements and operating components as well as changes in the building's appearance and other significant visual elements.
c. List products to be used and firms or entities that will perform Work.
d. Indicate dates when cutting and patching will be performed.

C. Utilities: List utilities that cutting and patching procedures will disturb or affect. List utilities that will be relocated and those that will be temporarily out-of-service. Indicate how long service will be disrupted.

D. Structural: Where cutting and patching involves adding reinforcement to structural elements, submit details and engineering calculations showing integration of

reinforcement with the original structure.

E. Roofing, Exterior Systems: When existing is under warranty, Owner to obtain written approval under the warranty, based on the submittal prepared by the Contractor. Work shall be performed by an authorized installer.

F. Approval by the Owner to proceed with cutting and patching does not waive the Owner's right to later require complete removal and replacement of unsatisfactory work.

1.04 STRUCTURAL WORK

A. Requirements for Structural Work: Do not cut and patch structural elements in a manner that would change their load-carrying capacity or load-deflection ratio.

B. Obtain approval of the cutting and patching proposal before cutting and patching the following structural elements:

1. Foundation construction.
2. Bearing and retaining walls.
3. Structural concrete.
4. Structural steel.
5. Lintels.
6. Timber and primary wood framing.
7. Structural decking.
8. Stair systems.
9. Miscellaneous structural metals.
10. Exterior curtain-wall construction.
11. Equipment supports.
12. Piping, ductwork, vessels, and equipment.
13. Structural systems of special construction in Division 13 Sections.

C. Operational Limitations: Do not cut and patch operating elements or related components in a manner that would result in reducing their capacity to perform as intended. Do not cut and patch operating elements or related components in a manner that would result in increased maintenance or decreased operational life or safety.

1.05 OPERATIONAL SYSTEMS

A. Obtain approval of the cutting and patching proposal before cutting and patching the following operating elements or safety related systems:

1. Primary operational systems and equipment.
2. Air or smoke barriers.
3. Water, moisture, or vapor barriers.
4. Membranes and flashings.

5. Fire protection systems.
6. Noise and vibration control elements and systems.
7. Control systems.
8. Communication systems.
9. Conveying systems.
10. Electrical wiring systems.
11. Operating systems of special construction in Division 13 Sections.

1.06 VISUAL REQUIREMENTS: Do not cut and patch construction exposed on the exterior or in occupied spaces in a manner that would, in the **Owner's** opinion, reduce the building's aesthetic qualities. Do not cut and patch construction in a manner that would result in visual evidence of cutting and patching. Remove and replace construction cut and patched in a visually unsatisfactory manner.

A. If possible retain the original installer or fabricator to cut and patch the exposed Work listed below. If it is impossible to engage the original installer or fabricator, engage another recognized experienced and specialized firm.

1. Processed concrete finishes.
2. Stonework and stone masonry.
3. Ornamental metal.
4. Matched-veneer woodwork.
5. Preformed metal panels.
6. Fire-stopping.
7. Window wall system.
8. Stucco and ornamental plaster.
9. Acoustical ceilings.
10. Terrazzo.
11. Finished wood flooring.
12. Fluid-applied flooring.
13. Carpeting.
14. Aggregate wall coating.
15. Wall covering.
16. Swimming pool finishes.
17. HVAC enclosures, cabinets, or covers.

1.07 WARRANTY

A. Existing Warranties: Replace, patch and repair material and surfaces cut or damaged by methods and with materials in such a manner as not to void any warranties required or existing. Roofing work shall be done by an installer authorized by the entity issuer.

PART 2 PRODUCTS

2.01 Materials, General: Use materials identical to existing materials. For exposed surfaces, use materials that visually match existing adjacent surfaces to the fullest extent possible if identical

materials are unavailable or cannot be used. Use materials whose installed performance will equal or surpass that of existing materials.

PART 3 EXECUTION

3.01 INSPECTION

A. Examine surfaces to be cut and patched and conditions under which cutting and patching is to be performed before cutting. If unsafe or unsatisfactory conditions are encountered, take corrective action before proceeding.

1. Before proceeding, meet at the Project Site with parties involved in cutting and patching, including mechanical and electrical trades. Review areas of potential interference and conflict. Coordinate procedures and resolve potential conflicts before proceeding.

B. PREPARATION

1. Temporary Support: Provide temporary support of work to be cut.
2. Protection: Protect existing construction during cutting and patching to prevent damage. Provide protection from adverse weather conditions for portions of the Project that might be exposed during cutting and patching operations.
3. Avoid interference with use of adjoining areas or interruption of free passage to adjoining areas.
4. Avoid cutting existing pipe, conduit, or ductwork serving the building but scheduled to be removed or relocated until provisions have been made to bypass them.

C. PERFORMANCE

1. General: Employ skilled workers to perform cutting and patching. Proceed with cutting and patching at the earliest feasible time and complete without delay.
2. Cut existing construction to provide for installation of other components or performance of other construction activities and the subsequent fitting and patching required to restore surfaces to their original condition.
3. Cutting: Cut existing construction using methods least likely to damage elements retained or adjoining construction. Where possible review proposed procedures with the original installer comply with the original installer's recommendations.
4. In general, where cutting, use hand or small power tools designed for sawing or grinding, not hammering and chopping. Cut holes and slots as small as possible, neatly to the size required, and with minimum disturbance of adjacent surfaces. Temporarily cover openings when not in use.
5. To avoid marring existing finished surfaces, cut or drill from the exposed or finished side into concealed surfaces.
6. Cut through concrete and masonry using a cutting machine, such as a Carborundum saw or a diamond-core drill.

7. Comply with requirements of applicable Division 2 Sections where cutting and patching requires excavating and backfilling.
8. Where services are required to be removed, relocated, or abandoned, by-pass utility services, such as pipe or conduit, before cutting. Cut off pipe or conduit in walls or partitions to be removed. Cap, valve, or plug and seal the remaining portion of pipe or conduit to prevent entrance of moisture or other foreign matter after bypassing and cutting.
9. Patching: Patch with durable seams that are as invisible as possible. Comply with specified tolerances.
10. Where feasible, inspect and test patched areas to demonstrate integrity of the installation.
11. Restore exposed finishes of patched areas and extend finish restoration into retained adjoining construction in a manner that will eliminate evidence of patching refinishing.
12. Where removing walls or partitions extends one finished area into another, patch and repair floor and wall surfaces in the new space. Provide an even surface of uniform color and appearance. Remove existing floor and wall coverings and replace with new materials if necessary, to achieve uniform color and appearance.
13. Where patching occurs in a smooth painted surface, extend final paint coat over entire unbroken surface containing the patch after the area has received primer and second coat.
14. Patch, repair, or re-hang existing ceilings as necessary to provide an even-plane surface of uniform appearance.

D. CLEANING

1. Clean areas and spaces where cutting and patching are performed. Completely remove paint, mortar, oils, putty, and similar items. Thoroughly clean piping, conduit, and similar features before applying paint or other finishing materials. Restore damaged pipe covering to its original condition.

END OF SECTION

This page intentionally left blank.

# PART 1 GENERAL

## 1.01 SECTION INCLUDES

A. Environmental Requirements

B. Dust Control and Road, Sidewalk Cleanup

C. Work Site Clean-Up/Occupied Building

D. Work Site Clean-Up

## 1.02 RELATED DOCUMENTS AND REQUIREMENTS

A. General Conditions and Special Conditions

## 1.03 ENVIORNMENTAL REQUIREMENTS

The Contractor shall include in its bid the cost of complying, and shall comply, and shall require each of its Subcontractors to comply, with this section and all Local, State, and Federal Environmental Law and Regulation.

# PART 2 PRODUCTS (Not Used)

# PART 3 EXECUTION

## 3.01 DUST CONTROL AND ROAD, SIDEWALK CLEANUP

A. The Contractor shall be responsible for dust control on the project site. The Contractor is responsible to prevent dust being generated from his operation to enter into any part of the existing facility. The only allowable exception is the area on the construction site of any temporary dust proof partitioning.
Should the site produce visible dust, the Contractor shall, when directed by the Owner, forthwith, apply a palliative, which prevents the dust from drifting or being wind-driven off the site.

B. The Contractor shall be responsible for dust control on all roads used by the Contractor and dust control on the project site. Frequent watering may be necessary to comply with this requirement.

1. In addition, sweep and clean roadways and sidewalks of dirt and debris immediately after any construction operation. In the event it rains before this can be performed, walkway shall <u>immediately</u> be washed clean. Roadways with six (6) feet or more of ditch or shoulder dirt may be swept without pickup. On roadways with less than six (6) feet of shoulder and ditch or where there are curbs, the dirt shall not be projected off the road but shall be picked up and the roadway left clean. Any major spill of earthwork, concrete or debris shall be immediately picked up from all roadways and the roadway cleaned.

2. No liquids may be discharged on sidewalks, parking lots, roadways, or lawns in winter or any other time without the express approval of and in accordance with methods prescribed by the Owner. Liquids of a toxic or flammable nature shall be contained and disposed of in accordance with laws governing their disposal. The Contractor shall be responsible for the immediate clean up of any liquid discharge to the requirements herein set forth.

3.02 WORK SITE CLEAN UP of an OCCUPIED BUILDING

A. Clean up frequently and as often and in such a manner as the Owner shall direct. If the Contractor fails to maintain an orderly construction site, the Owner may cause the clean up to be performed by others and back charge the cost of the clean up to the Contractor. The building will be occupied during the duration of construction.

END OF SECTION

# PART 1 GENERAL

## 1.01 SECTION INCLUDES

A. Starting systems.

B. Demonstration and instructions.

C. Testing, adjusting, and balancing.

## 1.02 RELATED SECTIONS

A. Section 01 77 00 - Closeout Procedures: System operation and maintenance data and extra materials.

## 1.03 STARTING SYSTEMS

A. Coordinate schedule for start-up of various equipment and systems.

B. Notify Owner of schedule seven days prior to start-up of each item.

C. Verify that each piece of equipment or system has been checked for proper lubrication, drive rotation, belt tension, control sequence, or for other conditions which may cause damage.

D. Verify that tests, meter readings, and specified electrical characteristics agree with those required by the equipment or system manufacturer.

E. Verify wiring and support components for equipment are complete and tested.

F. Execute start-up under supervision of applicable manufacturer's representative in accordance with manufacturers' instructions.

G. When specified in individual specification Sections, require manufacturer to provide authorized representative to be present at site to inspect, check, and approve equipment or system installation prior to start-up, and to supervise placing equipment or system in operation.

H. Submit a written report that equipment or system has been properly installed and is functioning correctly.

## 1.04 DEMONSTRATION AND INSTRUCTIONS

A. Demonstrate operation and maintenance of Products to Owner's personnel two weeks prior to date of Substantial Completion.

B. In a classroom environment located at the Project site, demonstrate and provide

instruction for the Project equipment by a manufacturer's representative who is knowledgeable about the Project.

C. For equipment or systems requiring seasonal operation, schedule demonstration for other season(s). Demonstration to occur within nine months.

D. Utilize operation and maintenance manuals as basis for instruction. Review contents of manual with Owners' personnel in detail to explain all aspects of operation and maintenance.

E. Demonstrate start-up, operation, control, adjustment, trouble-shooting, servicing, maintenance, and shutdown of each item of equipment at agreed time, at equipment location.

F. Prepare and insert additional data in operations and maintenance manuals when need for additional data becomes apparent during instruction.

G. The amount of time required for instruction on each item of equipment and system is that specified in individual sections.

PART 2 PRODUCTS (Not Used)

PART 3 EXECUTION (Not Used)

END OF SECTION

# PART 1 GENERAL

## 1.01 SECTION INCLUDES

A. Substantial Completion inspection requirements

B. Instructions to Owner

C. Replacement Materials

D. Final cleaning

E. Final inspection requirements

## 1.02 RELATED DOCUMENTS AND REQUIREMENTS

A. General Conditions and Special Conditions

B. 01 78 00 - Record Documents; Operation and Maintenance Manuals; Warranties

## 1.03 SUBSTANTIAL COMPLETION INSPECTION REQUIREMENTS

A. Closeout requirements for specific construction activities are included in Sections in Divisions 2 through 16.

B. Before requesting a Substantial Completion inspection complete the following:

1. Approved Operation and Maintenance Manuals in accordance with Section 01 78 00.
2. Updated Project Record Documents in accordance with Section 01 78 00.
3. Electrical, mechanical and life safety systems are in place, balanced, tested, commissioned, and accepted for proper operation.
4. Complete training and instruction of Owner's personnel.
5. Deliver replacement materials, spare parts and similar items.
6. Make final changeover of permanent locks and transmit keys to Owner.

C. Submit a request in writing that the work is Substantially Complete and available for inspection at least ten (10) days prior to the desired date of the inspection. Include a detailed list of uncompleted items and the schedule for their completion.

## 1.04 INSTRUCTIONS TO OWNER

The Contractor will instruct the Owner or the maintenance personnel of the Owner in the operation and maintenance of all equipment prior to substantial completion. This will include actual demonstration of operation and written instructions.

A. The Contractor shall provide a minimum of **<u>two</u> (2)** hours of actual training unless a longer period is specified elsewhere in the contract.

1.05 FINAL CLEANING

A. General: The General Conditions require general cleaning during construction.

B. Clean all surfaces in accordance with manufacturer's recommendations.

C. Complete the following items prior to Final Inspection:

1. Remove labels that are not permanent labels.
2. Clean mirrors and glass in doors and windows.
3. Clean exposed exterior and interior hard-surfaced finishes to a dust-free condition, free of stains, films and similar foreign substances. Leave concrete floors broom clean. Vacuum carpeted surfaces.
4. Wipe surfaces of mechanical and electrical equipment. Remove excess lubrication and other substances. Clean plumbing fixtures to a sanitary condition. Clean light fixtures and lamps.
5. Clean the site, including landscape development areas, temporary facilities locations, and staging areas. Sweep paved areas broom clean; remove stains, excess concrete, and other foreign deposits.

1.06 FINAL INSPECTION REQUIREMENTS

A. Submit the following prior to Final Inspection:

1. Approved Project Record Documents.
2. Waiver of Release and Liens (forms provided)
3. Consent of Surety to Final Payment (form provided)
4. Final Application for payment.

B. Remove temporary facilities and controls.

C. Submit a written request for final inspection ten (10) days prior to the desired date for final inspection. Written request to certify that all items identified for correction during the Substantial Completion inspection have been corrected, and must be accompanied by an item for item list documenting each punch list item is corrected.

PART 2 PRODUCTS (Not Used)

PART 3 EXECUTION (Not Used)

END OF SECTION

# PART 1 GENERAL

## 1.01 SECTION INCLUDES

A. Project Record Documents

B. Operation and maintenance manuals submittal requirements.

## 1.02 RELATED DOCUMENTS

A. General Conditions and Special Conditions

B. Section 01 77 00 - Closeout Procedures

C. UAA CAD Standards ( Available on request)

## 1.03 PROJECT RECORD DOCUMENTS

Make and maintain the following records of the as-built condition of the project:

A. One complete set of conformed specifications and one complete set of conformed drawings on which all changes of materials, equipment, or dimensions shall be recorded and kept current on a daily basis. Include the entire scope of the project, including the work of all subcontractors. No work is to be permanently concealed until required as-built information has been recorded.

B. Drawing notations are to be orderly, neat and legible, of quality sufficient for photocopying, and shall include as a minimum:

1. applicable contract Change Orders (CO's)
2. applicable design clarifications/corrections (RFI's)
3. field changes of dimension and detail
4. details not in original contract drawings
5. location of all valves and sensors with appropriate tag identification
6. measured depths of elements of foundation in relation to finish first floor datum
7. measured horizontal and vertical locations of underground utilities and appurtenances, referenced to permanent surface improvements
8. measured locations of internal utilities and appurtenances concealed in construction, references of visible and accessible features of constructions

C. The as-built drawings are to be available to the Owner at all times for review or duplication. The Owner may elect to inspect the record documents on a weekly or an as-needed basis.

D. Progress payments may be withheld if the Owner determines that the Contractor has failed to keep the as-built drawings as specified.

E. Before backfilling of buried work the Contractor shall record the as-built condition

describing the type, dimensions, and horizontal and vertical locations of all buried work, including piping, conduits, and foundations.

F. As a condition precedent to receiving periodic payment, the contractor shall furnish an as-built drawing of buried work satisfactory to the Owner and certified by the Contractor. The drawing shall be referenced to the as-built project lines and shall include buried work both inside and outside building lines.

G. Two weeks prior to substantial completion inspection, submit as-built drawings to the Owner for review.

H. Owner will provide the Contractor with a complete set of electronic conformed drawings. **Contractor shall transfer all as-built conditions from redline drawings to electronic drawing files and produce As-Built Drawings in accordance with UAA CAD Standards.** The electronic as-built files, Contractor's red-line drawings and printed drawings shall be submitted to the Owner. Final drawings shall have "As-Built" printed on them and be signed by contractor's authorized agent. Submit corrected electronic drawing files and final printed drawings to the Owner one-week prior to final inspection.

I. The electronic conformed drawings shall consist of the project's CAD documents delivered in AutoCAD dwg file format and a PDF version of each drawing sheet. Electronic files shall be submitted on CD-ROM or DVD.

J. The currently supported AutoCAD version in use within Facilities Planning and Construction is AutoCAD 2012. The University will accept file formats down-ward compatible to version AutoCAD 2004.

1.04 OPERATION AND MAINTENANCE MANUALS

A. General Requirements, in addition to information required in General Condition 38 and 41:

1. All O&M manuals shall be bound in 3-ring slant "D" presentation ring binders, maximum 11-5/8" high and 11-1/4" deep. The spine, front and back, shall be heavy virgin vinyl sealed over heavy board. The binders shall be provided with clear, full size pockets on the spine and front cover. The thickness of the contents shall not exceed 75% the binder manufacturer's stated capacity. In addition, two (2) CD-Roms shall be provided containing the same information.

2. All binders shall be black in color and clearly labeled on the spine with project name and number, building and volume, and all of the following on the front cover:

Weidner Classroom Remodel
Project No.: 17-0033
Building Name: Rasmuson Hall
Building No.: 105
Contractor: (Name, address, phone number)
Consultant: Kumin & Assoc.

Operational and Maintenance Manual, Volume ___ of ___
Discipline:_____
Date: _____

4. All pages shall be 8 1/2" x 11" or 11" x 17" folded to 8 1/2" x 11" in such a way as to permit unfolding without removal from the binder.
5. The manuals shall be organized into the following **six** categories:

    a. Divisions 2 through 13
    b. Division 14
    c. Division 15
    d. Division 16 (includes AV equipment)
    e. Direct Digital Controls (DDC)
    f. Fire Alarm System

6. When separate volumes are required, Contractor shall not separate a division into different volumes unless a single division binder would exceed 3 inches in width; that division may be in multiple volumes.
7. Each volume shall contain a directory listing names, addresses and telephone number of:

    a. Contractor
    b. Subcontractor
    c. Suppliers

8. Each volume shall contain an Index giving:

    a. Tab Number
    b. Contents
    c. Specification Reference

9. Each volume shall be sequentially tabbed consistent with Index Tab Number and contents, identified on both sides of the plastic tab.
10. Precede each item with an O&M Data Sheet.
11. Each O&M Data Sheet shall be signed and dated by the Contractor.

B. Architectural Materials and Finishes

1. For each item provide (on O&M Data Sheet) names, addresses and telephone numbers of suppliers providing guarantee or warranty service and source of replacement part.
2. Building products, applied materials and finishes: Include product data, with catalog number, size, composition, color, and texture designations. Provide information for re-ordering custom manufactured products.
3. Instructions for care and maintenance: Include manufacturer's recommendation for cleaning agents and methods, precautions against detrimental agents and methods, and recommended schedule for cleaning and maintenance.
4. Moisture-protection and weather-exposed products: Include product data listing

applicable reference standards, chemical composition, and details of installation. Provide recommendations for inspections, maintenance and repair.

C. Mechanical Equipment and Systems

1. Shall include a manufacturer's recommended Preventive Maintenance Inspection (PMI) schedule to improve operation and prolong service life.
2. Provide written operating procedures for the systems and equipment supplies. The procedures shall include requirements for start-up, adjustment, testing, normal operation, shutdown, and emergency shutdown."
3. Include pipe and duct identification schedules.
4. Include a directory of all equipment indicating designation, location, manufacturers' name, model number, serial number, accessories, complete ordering number, electrical characteristics, primary control switch location, and normal position of switch.
5. Include exploded parts diagrams (if available from manufacturer) and complete listings of repair and replacement parts for all equipment and accessories, and names and addresses of the suppliers from which the equipment was obtained.
6. Include valve directory indicating valve number, size, location, function, service type and normal position.
7. Include shop drawing as-builts.
8. Include approved air and hydronic systems test and balance (TAB) report.
9. Include warranties.

D. Electrical Equipment and Systems

1. Include (if available from manufacturer) exploded parts diagrams and equipment and accessories, complete listings of repair and replacement parts for all equipment, and names and addresses of the suppliers from which the equipment was obtained.
2. Include complete listing of all equipment which may require periodic servicing, with recommended schedules and complete instructions for performing said servicing. Service instructions shall include complete English-language narrative descriptions and illustrations as necessary to thoroughly describe all service operations. Illustrations with just multi-language skeleton instructions are not acceptable.
3. Provide written operating procedures for the systems and equipment supplied. The procedures shall include requirements for start-up, adjustment, testing, normal operation, shutdown, and emergency shutdown.
4. Include a listing of the correct size, type, location, and equipment protected for each fuse application in the project.
5. Include "one-line" diagram showing the as-built condition of the service and distribution system. For this purpose, a digital .dwg file of the one-line diagram from the Contract Drawings may be obtained from the Owner to be edited with any as-built modifications by the Contractor.
6. Include wiring diagrams for all supplied equipment showing the internal control and power wiring configuration.
7. Include warranties.

PART 2 PRODUCTS (Not Used)

PART 3 EXECUTION (Not Used)

END OF SECTION

This page intentionally left blank.

# PART 1 GENERAL

## 1.01 RELATED DOCUMENTS

A. Drawings and general provisions of the Contract, including General and Special Conditions and other Division 1 Specifications, apply to this Section.

## 1.02 SUMMARY

A. This Section includes administrative and procedural requirements for instructing Owner's personnel, including the following:

1. Demonstrations of operation of systems, subsystems and equipment.
2. Training in operation and maintenance of systems, subsystems and equipment.
3. Demonstration and training videotapes.

B. Related Sections include the following:

1. All other Specification Sections for specific requirements for demonstration and training for products in those Sections.

## 1.03 SUBMITTALS

A. Instruction Program:

B. Demonstration and Training Videotapes: Submit two copies within seven (7) days of each training module.

1. Identification: On each copy, provide an applied label with the following information:
    a. Name of Project.
    b. Name and address of photographer.
    c. Name of Contractor.
    d. Date Videotape was recorded.
    e. Description of vantage point, indicating location, direction (by compass point), and elevation or story of construction.

## 1.04 QUALITY ASSURANCE

A. Instructor Qualifications:

# PART 2 PRODUCTS (Not Used)

# PART 3 EXECUTION (Not Used)

END OF SECTION

This page intentionally left blank.

# APPENDIX

## UAA RAS WEIDNER CLASSROOM

## PROJECT NO. 17-0033

This page intentionally left blank.

# APPENDIX A

This page intentionally left blank.

**MOBILIZATION MAP**

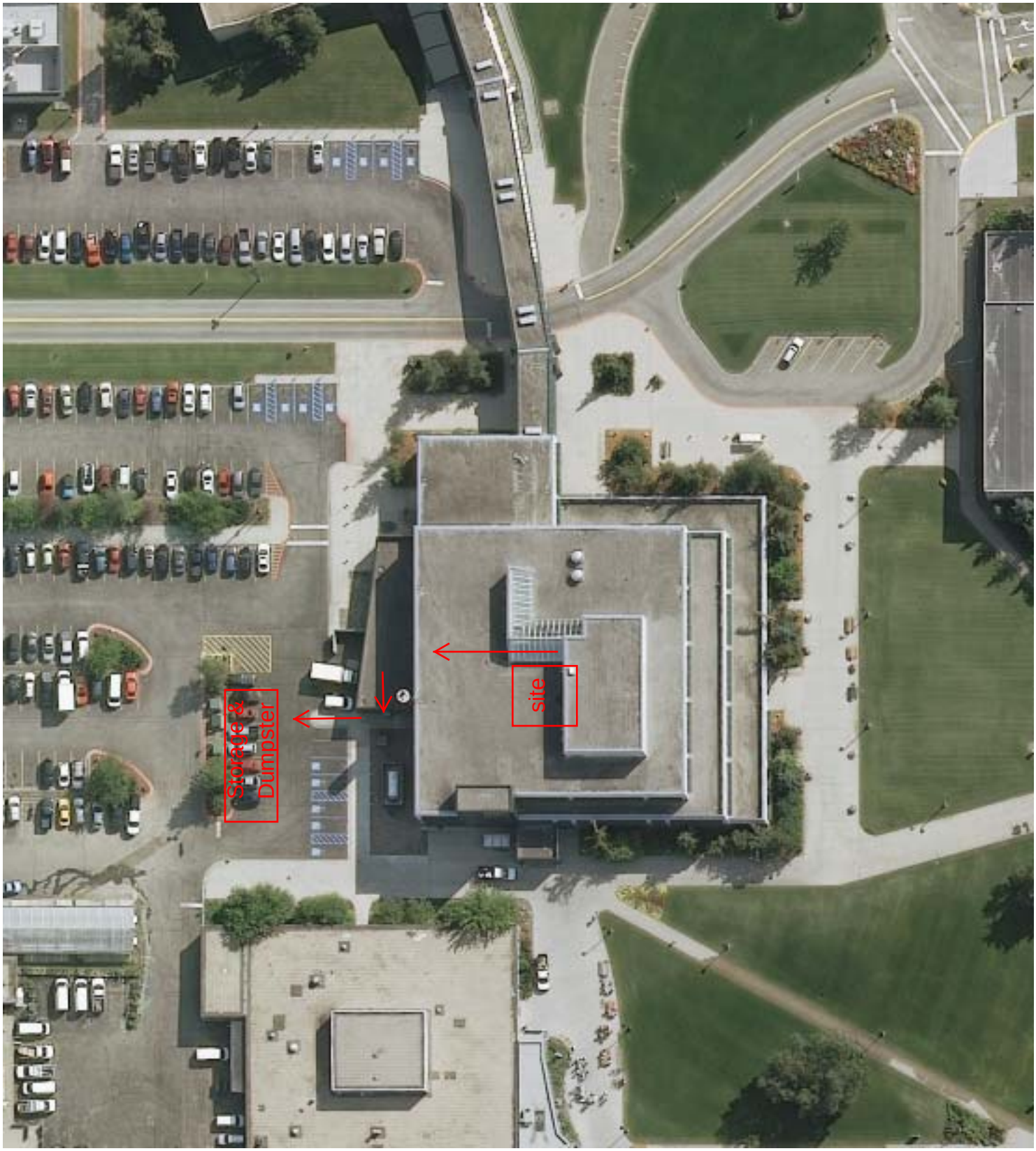

This page intentionally left blank.

# APPENDIX B

This page intentionally left blank.

# Cable Pull Schedule

Modified: 2/24/2017

## UAA - RH 111

| | | | FROM | | | TO | | |
|---|---|---|---|---|---|---|---|---|
| **OK** | **Cable Description** | **Cable ID** | **Location** | **Manufacturer - Model** | **Component ID** | **Location** | **Manufacturer - Model** | **Component ID** |
| RH 111: Table Location 1 | | | | | | | | |
| | AUDIX CBLM325 | CAT7-001 | Ceiling Above Table Location 1 | AUDIX M3W | MICROPHONE-001 | Rack Location | EXTRON DMP 128 PLUS C | DSP-001 |
| | Chariot CTRL 4C22 NONPLENUM | CTRL-001 | Projector Location Table 1 | EXTRON DTP HDMI 4K 230 RX | DTP_RX-001 | Projector Location Table 1 | EPSON PowerLite 585W | PROJECTOR-001 |
| | Chariot XTP DTP 24 PLENUM | DTP-001 | RH 111: Table Location 1 | EXTRON DTP T HD2 4K 230 | DTP_TX-001 | Rack Location | DTP HDMI 4K 230 RX | DTP_RX-100 |
| | EXTRON HDMI ULTRA/6 | HDMI-100 | RH 111: Table Location 1 | EXTRON DTP HDMI 4K 230 RX | DTP_RX-001 | Projector Location Table 1 | EPSON PowerLite 585W | PROJECTOR-001 |
| | EXTRON HDMI ULTRA/12 | HDMI-101 | RH 111: Table Location 1 | CLIENT-PROVIDED CPU | 1 | RH 111: Table Location 1 | EXTRON SW8 HDMI | SWITCHER-001 |
| | EXTRON HDMI ULTRA/12 | HDMI-102 | RH 111: Table Location 1 | CLIENT-PROVIDED CPU | 2 | RH 111: Table Location 1 | EXTRON SW8 HDMI | SWITCHER-001 |
| | EXTRON HDMI ULTRA/12 | HDMI-103 | RH 111: Table Location 1 | CLIENT-PROVIDED CPU | 3 | RH 111: Table Location 1 | EXTRON SW8 HDMI | SWITCHER-001 |
| | EXTRON HDMI ULTRA/12 | HDMI-104 | RH 111: Table Location 1 | CLIENT-PROVIDED CPU | 4 | RH 111: Table Location 1 | EXTRON SW8 HDMI | SWITCHER-001 |
| | EXTRON HDMI ULTRA/12 | HDMI-105 | RH 111: Table Location 1 | CLIENT-PROVIDED CPU | 5 | RH 111: Table Location 1 | EXTRON SW8 HDMI | SWITCHER-001 |
| | EXTRON HDMI ULTRA/12 | HDMI-106 | RH 111: Table Location 1 | CLIENT-PROVIDED CPU | 6 | RH 111: Table Location 1 | EXTRON SW8 HDMI | SWITCHER-001 |
| | EXTRON HDMI ULTRA/12 | HDMI-107 | RH 111: Table Location 1 | CLIENT-PROVIDED CPU | 7 | RH 111: Table Location 1 | EXTRON SW8 HDMI | SWITCHER-001 |
| | EXTRON HDMI ULTRA/6 | HDMI-111 | RH 111: Table Location 1 | EXTRON SW8 HDMI | SWITCHER-001 | RH 111: Table Location 1 | EXTRON DTP T HD2 4K 230 | DTP_TX-001 |
| | EXTRON HDMI ULTRA/12 | HDMI-112 | RH 111: Table Location 1 | EXTRON DTP T HD2 4K 230 | DTP_TX-001 | Projector Location Table 1 | EPSON PowerLite 585W | PROJECTOR-001 |
| | Chariot CTRL 2C22 NONPLENUM | CTRL-007 | RH 111: Table Location 1 | EXTRON MAAP CC SWITCH | 1 | RH 111: Table Location 1 | EXTRON SW8 HDMI | SWITCHER-001 |
| | Chariot CTRL 2C22 NONPLENUM | CTRL-008 | RH 111: Table Location 1 | EXTRON MAAP CC SWITCH | 2 | RH 111: Table Location 1 | EXTRON SW8 HDMI | SWITCHER-001 |
| | Chariot CTRL 2C22 NONPLENUM | CTRL-009 | RH 111: Table Location 1 | EXTRON MAAP CC SWITCH | 3 | RH 111: Table Location 1 | EXTRON SW8 HDMI | SWITCHER-001 |
| | Chariot CTRL 2C22 NONPLENUM | CTRL-010 | RH 111: Table Location 1 | EXTRON MAAP CC SWITCH | 4 | RH 111: Table Location 1 | EXTRON SW8 HDMI | SWITCHER-001 |
| | Chariot CTRL 2C22 NONPLENUM | CTRL-011 | RH 111: Table Location 1 | EXTRON MAAP CC SWITCH | 5 | RH 111: Table Location 1 | EXTRON SW8 HDMI | SWITCHER-001 |
| | Chariot CTRL 2C22 NONPLENUM | CTRL-012 | RH 111: Table Location 1 | EXTRON MAAP CC SWITCH | 6 | RH 111: Table Location 1 | EXTRON SW8 HDMI | SWITCHER-001 |

| | | | FROM | | | TO | | |
|---|---|---|---|---|---|---|---|---|
| **OK** | **Cable Description** | **Cable ID** | **Location** | **Manufacturer - Model** | **Component ID** | **Location** | **Manufacturer - Model** | **Component ID** |
| | Chariot CTRL 2C22 NONPLENUM | CTRL-013 | RH 111: Table Location 1 | EXTRON MAAP CC SWITCH | 7 | RH 111: Table Location 1 | EXTRON SW8 HDMI | SWITCHER-001 |
| RH 111: Table Location 2 | | | | | | | | |
| | AUDIX CBLM325 | CAT7-002 | Ceiling Above Table Location 2 | AUDIX M3W | MICROPHONE-002 | Rack Location | EXTRON DMP 128 PLUS C | DSP-001 |
| | Chariot CTRL 4C22 NONPLENUM | CTRL-002 | RH 111: Table Location 2 | EXTRON DTP HDMI 4K 230 RX | DTP_RX-002 | Projector Location Table 2 | EPSON PowerLite 585W | PROJECTOR-002 |
| | Chariot XTP DTP 24 PLENUM | DTP-002 | RH 111: Table Location 2 | EXTRON DTP T HD2 4K 230 | DTP_TX-002 | Rack Location | DTP HDMI 4K 230 RX | DTP_RX-200 |
| | EXTRON HDMI ULTRA/12 | HDMI-211 | RH 111: Table Location 2 | EXTRON SW8 HDMI | SWITCHER-002 | RH 111: Table Location 2 | EXTRON DTP T HD2 4K 230 | DTP_TX-001 |
| | EXTRON HDMI ULTRA/12 | HDMI-212 | RH 111: Table Location 2 | EXTRON DTP T HD2 4K 230 | DTP_TX-002 | Projector Location Table 2 | EPSON PowerLite 585W | PROJECTOR-002 |
| | EXTRON HDMI ULTRA/6 | HDMI-200 | Projector Location Table 2 | EXTRON DTP HDMI 4K 230 RX | DTP_RX-002 | Projector Location Table 2 | EPSON PowerLite 585W | PROJECTOR-002 |
| | EXTRON HDMI ULTRA/12 | HDMI-201 | RH 111: Table Location 2 | CLIENT-PROVIDED CPU | 1 | RH 111: Table Location 2 | EXTRON SW8 HDMI | SWITCHER-002 |
| | EXTRON HDMI ULTRA/6 | HDMI-202 | RH 111: Table Location 2 | CLIENT-PROVIDED CPU | 2 | RH 111: Table Location 2 | EXTRON SW8 HDMI | SWITCHER-002 |
| | EXTRON HDMI ULTRA/12 | HDMI-203 | RH 111: Table Location 2 | CLIENT-PROVIDED CPU | 3 | RH 111: Table Location 2 | EXTRON SW8 HDMI | SWITCHER-002 |
| | EXTRON HDMI ULTRA/12 | HDMI-204 | RH 111: Table Location 2 | CLIENT-PROVIDED CPU | 4 | RH 111: Table Location 2 | EXTRON SW8 HDMI | SWITCHER-002 |
| | EXTRON HDMI ULTRA/12 | HDMI-205 | RH 111: Table Location 2 | CLIENT-PROVIDED CPU | 5 | RH 111: Table Location 2 | EXTRON SW8 HDMI | SWITCHER-002 |
| | EXTRON HDMI ULTRA/12 | HDMI-206 | RH 111: Table Location 2 | CLIENT-PROVIDED CPU | 6 | RH 111: Table Location 2 | EXTRON SW8 HDMI | SWITCHER-002 |
| | Chariot CTRL 2C22 NONPLENUM | CTRL-015 | RH 111: Table Location 2 | EXTRON MAAP CC SWITCH | 1 | RH 111: Table Location 2 | EXTRON SW8 HDMI | SWITCHER-002 |
| | Chariot CTRL 2C22 NONPLENUM | CTRL-016 | RH 111: Table Location 2 | EXTRON MAAP CC SWITCH | 2 | RH 111: Table Location 2 | EXTRON SW8 HDMI | SWITCHER-002 |
| | Chariot CTRL 2C22 NONPLENUM | CTRL-017 | RH 111: Table Location 2 | EXTRON MAAP CC SWITCH | 3 | RH 111: Table Location 2 | EXTRON SW8 HDMI | SWITCHER-002 |
| | Chariot CTRL 2C22 NONPLENUM | CTRL-018 | RH 111: Table Location 2 | EXTRON MAAP CC SWITCH | 4 | RH 111: Table Location 2 | EXTRON SW8 HDMI | SWITCHER-002 |
| | Chariot CTRL 2C22 NONPLENUM | CTRL-019 | RH 111: Table Location 2 | EXTRON MAAP CC SWITCH | 5 | RH 111: Table Location 2 | EXTRON SW8 HDMI | SWITCHER-002 |
| | Chariot CTRL 2C22 NONPLENUM | CTRL-020 | RH 111: Table Location 2 | EXTRON MAAP CC SWITCH | 6 | RH 111: Table Location 2 | EXTRON SW8 HDMI | SWITCHER-002 |
| RH 111: Table Location 3 | | | | | | | | |
| | AUDIX CBLM325 | CAT7-003 | Ceiling Above Table Location 3 | AUDIX M3W | MICROPHONE-003 | Rack Location | EXTRON DMP 128 PLUS C | DSP-001 |

| | | | FROM | | | TO | | |
|---|---|---|---|---|---|---|---|---|
| **OK** | **Cable Description** | **Cable ID** | **Location** | **Manufacturer - Model** | **Component ID** | **Location** | **Manufacturer - Model** | **Component ID** |
| | Chariot CTRL 4C22 NONPLENUM | CTRL-003 | Projector Location Table 3 | EXTRON DTP HDMI 4K 230 RX | DTP_RX-003 | Projector Location Table 3 | EPSON PowerLite 585W | PROJECTOR-003 |
| | Chariot XTP DTP 24 PLENUM | DTP-003 | RH 111: Table Location 3 | EXTRON DTP T HD2 4K 230 | DTP_TX-003 | Rack Location | DTP HDMI 4K 230 RX | DTP_RX-300 |
| | EXTRON HDMI ULTRA/6 | HDMI-300 | Projector Location Table 3 | EXTRON DTP HDMI 4K 230 RX | DTP_RX-003 | Projector Location Table 3 | EPSON PowerLite 585W | PROJECTOR-003 |
| | EXTRON HDMI ULTRA/12 | HDMI-301 | RH 111: Table Location 3 | CLIENT-PROVIDED CPU | 1 | RH 111: Table Location 3 | EXTRON SW8 HDMI | SWITCHER-003 |
| | EXTRON HDMI ULTRA/12 | HDMI-302 | RH 111: Table Location 3 | CLIENT-PROVIDED CPU | 2 | RH 111: Table Location 3 | EXTRON SW8 HDMI | SWITCHER-003 |
| | EXTRON HDMI ULTRA/12 | HDMI-303 | RH 111: Table Location 3 | CLIENT-PROVIDED CPU | 3 | RH 111: Table Location 3 | EXTRON SW8 HDMI | SWITCHER-003 |
| | EXTRON HDMI ULTRA/12 | HDMI-304 | RH 111: Table Location 3 | CLIENT-PROVIDED CPU | 4 | RH 111: Table Location 3 | EXTRON SW8 HDMI | SWITCHER-003 |
| | EXTRON HDMI ULTRA/12 | HDMI-305 | RH 111: Table Location 3 | CLIENT-PROVIDED CPU | 5 | RH 111: Table Location 3 | EXTRON SW8 HDMI | SWITCHER-003 |
| | EXTRON HDMI ULTRA/12 | HDMI-306 | RH 111: Table Location 3 | CLIENT-PROVIDED CPU | 6 | RH 111: Table Location 3 | EXTRON SW8 HDMI | SWITCHER-003 |
| | EXTRON HDMI ULTRA/6 | HDMI-311 | RH 111: Table Location 3 | EXTRON SW8 HDMI | SWITCHER-003 | RH 111: Table Location 3 | EXTRON DTP T HD2 4K 230 | DTP_TX-003 |
| | EXTRON HDMI ULTRA/12 | HDMI-312 | RH 111: Table Location 3 | EXTRON DTP T HD2 4K 230 | DTP_TX-003 | Projector Location Table 3 | EPSON PowerLite 585W | PROJECTOR-003 |
| | Chariot CTRL 2C22 NONPLENUM | CTRL-022 | RH 111: Table Location 3 | EXTRON MAAP CC SWITCH | 1 | RH 111: Table Location 3 | EXTRON SW8 HDMI | SWITCHER-003 |
| | Chariot CTRL 2C22 NONPLENUM | CTRL-023 | RH 111: Table Location 3 | EXTRON MAAP CC SWITCH | 2 | RH 111: Table Location 3 | EXTRON SW8 HDMI | SWITCHER-003 |
| | Chariot CTRL 2C22 NONPLENUM | CTRL-024 | RH 111: Table Location 3 | EXTRON MAAP CC SWITCH | 3 | RH 111: Table Location 3 | EXTRON SW8 HDMI | SWITCHER-003 |
| | Chariot CTRL 2C22 NONPLENUM | CTRL-025 | RH 111: Table Location 3 | EXTRON MAAP CC SWITCH | 4 | RH 111: Table Location 3 | EXTRON SW8 HDMI | SWITCHER-003 |
| | Chariot CTRL 2C22 NONPLENUM | CTRL-026 | RH 111: Table Location 3 | EXTRON MAAP CC SWITCH | 5 | RH 111: Table Location 3 | EXTRON SW8 HDMI | SWITCHER-003 |
| | Chariot CTRL 2C22 NONPLENUM | CTRL-027 | RH 111: Table Location 3 | EXTRON MAAP CC SWITCH | 6 | RH 111: Table Location 3 | EXTRON SW8 HDMI | SWITCHER-003 |
| RH 111: Table Location 4 | | | | | | | | |
| | AUDIX CBLM325 | CAT7-004 | Ceiling Above Table Location 4 | AUDIX M3W | MICROPHONE-004 | Rack Location | EXTRON DMP 128 PLUS C V | DSP-002 |
| | Chariot CTRL 4C22 NONPLENUM | CTRL-004 | Projector Location Table 4 | EXTRON DTP HDMI 4K 230 RX | DTP_RX-004 | Projector Location Table 4 | EPSON PowerLite 585W | PROJECTOR-004 |
| | Chariot XTP DTP 24 PLENUM | DTP-004 | RH 111: Table Location 4 | EXTRON DTP T HD2 4K 230 | DTP_TX-004 | Rack Location | EXTRON DTP HDMI 4K 230 RX | DTP_RX-400 |
| | EXTRON HDMI ULTRA/6 | HDMI-400 | Projector Location Table 4 | EXTRON DTP HDMI 4K 230 RX | DTP_RX-004 | Projector Location Table 4 | EPSON PowerLite 585W | PROJECTOR-004 |

| | | | FROM | | | TO | | |
|---|---|---|---|---|---|---|---|---|
| **OK** | **Cable Description** | **Cable ID** | **Location** | **Manufacturer - Model** | **Component ID** | **Location** | **Manufacturer - Model** | **Component ID** |
| | EXTRON HDMI ULTRA/12 | HDMI-401 | RH 111: Table Location 4 | CLIENT-PROVIDED CPU | 1 | RH 111: Table Location 4 | EXTRON SW8 HDMI | SWITCHER-004 |
| | EXTRON HDMI ULTRA/12 | HDMI-402 | RH 111: Table Location 4 | CLIENT-PROVIDED CPU | 2 | RH 111: Table Location 4 | EXTRON SW8 HDMI | SWITCHER-004 |
| | EXTRON HDMI ULTRA/12 | HDMI-403 | RH 111: Table Location 4 | CLIENT-PROVIDED CPU | 3 | RH 111: Table Location 4 | EXTRON SW8 HDMI | SWITCHER-004 |
| | EXTRON HDMI ULTRA/12 | HDMI-404 | RH 111: Table Location 4 | CLIENT-PROVIDED CPU | 4 | RH 111: Table Location 4 | EXTRON SW8 HDMI | SWITCHER-004 |
| | EXTRON HDMI ULTRA/12 | HDMI-405 | RH 111: Table Location 4 | CLIENT-PROVIDED CPU | 5 | RH 111: Table Location 4 | EXTRON SW8 HDMI | SWITCHER-004 |
| | EXTRON HDMI ULTRA/12 | HDMI-406 | RH 111: Table Location 4 | CLIENT-PROVIDED CPU | 6 | RH 111: Table Location 4 | EXTRON SW8 HDMI | SWITCHER-004 |
| | EXTRON HDMI ULTRA/6 | HDMI-411 | RH 111: Table Location 4 | EXTRON SW8 HDMI | SWITCHER-004 | RH 111: Table Location 4 | EXTRON DTP T HD2 4K 230 | DTP_TX-004 |
| | EXTRON HDMI ULTRA/12 | HDMI-412 | RH 111: Table Location 4 | EXTRON DTP T HD2 4K 230 | DTP_TX-004 | Projector Location Table 4 | EPSON PowerLite 585W | PROJECTOR-004 |
| | Chariot CTRL 2C22 NONPLENUM | CTRL-029 | RH 111: Table Location 4 | EXTRON MAAP CC SWITCH | 1 | RH 111: Table Location 4 | EXTRON SW8 HDMI | SWITCHER-004 |
| | Chariot CTRL 2C22 NONPLENUM | CTRL-030 | RH 111: Table Location 4 | EXTRON MAAP CC SWITCH | 2 | RH 111: Table Location 4 | EXTRON SW8 HDMI | SWITCHER-004 |
| | Chariot CTRL 2C22 NONPLENUM | CTRL-031 | RH 111: Table Location 4 | EXTRON MAAP CC SWITCH | 3 | RH 111: Table Location 4 | EXTRON SW8 HDMI | SWITCHER-004 |
| | Chariot CTRL 2C22 NONPLENUM | CTRL-032 | RH 111: Table Location 4 | EXTRON MAAP CC SWITCH | 4 | RH 111: Table Location 4 | EXTRON SW8 HDMI | SWITCHER-004 |
| | Chariot CTRL 2C22 NONPLENUM | CTRL-033 | RH 111: Table Location 4 | EXTRON MAAP CC SWITCH | 5 | RH 111: Table Location 4 | EXTRON SW8 HDMI | SWITCHER-004 |
| | Chariot CTRL 2C22 NONPLENUM | CTRL-034 | RH 111: Table Location 4 | EXTRON MAAP CC SWITCH | 6 | RH 111: Table Location 4 | EXTRON SW8 HDMI | SWITCHER-004 |
| RH 111: Table Location 5 | | | | | | | | |
| | AUDIX CBLM325 | CAT7-005 | Ceiling Above Table Location 5 | AUDIX M3W | MICROPHONE-005 | Rack Location | EXTRON DMP 128 PLUS C V | DSP-002 |
| | Chariot CTRL 4C22 NONPLENUM | CTRL-005 | Projector Location Table 5 | EXTRON DTP HDMI 4K 230 RX | DTP_RX-005 | Projector Location Table 5 | EPSON PowerLite 585W | PROJECTOR-005 |
| | Chariot XTP DTP 24 PLENUM | DTP-005 | RH 111: Table Location 5 | EXTRON DTP T HD2 4K 230 | DTP_TX-005 | Rack Location | EXTRON DTP HDMI 4K 230 RX | DTP_RX-500 |
| | EXTRON HDMI ULTRA/6 | HDMI-500 | Projector Location Table 5 | EXTRON DTP HDMI 4K 230 RX | DTP_RX-005 | Projector Location Table 5 | EPSON PowerLite 585W | PROJECTOR-005 |
| | EXTRON HDMI ULTRA/12 | HDMI-501 | RH 111: Table Location 5 | CLIENT-PROVIDED CPU | 1 | RH 111: Table Location 5 | EXTRON SW8 HDMI | SWITCHER-005 |
| | EXTRON HDMI ULTRA/12 | HDMI-502 | RH 111: Table Location 5 | CLIENT-PROVIDED CPU | 2 | RH 111: Table Location 5 | EXTRON SW8 HDMI | SWITCHER-005 |
| | EXTRON HDMI ULTRA/12 | HDMI-503 | RH 111: Table Location 5 | CLIENT-PROVIDED CPU | 3 | RH 111: Table Location 5 | EXTRON SW8 HDMI | SWITCHER-005 |

| | | | FROM | | | TO | | |
|---|---|---|---|---|---|---|---|---|
| **OK** | **Cable Description** | **Cable ID** | **Location** | **Manufacturer - Model** | **Component ID** | **Location** | **Manufacturer - Model** | **Component ID** |
| | EXTRON HDMI ULTRA/12 | HDMI-504 | RH 111: Table Location 5 | CLIENT-PROVIDED CPU | 4 | RH 111: Table Location 5 | EXTRON SW8 HDMI | SWITCHER-005 |
| | EXTRON HDMI ULTRA/12 | HDMI-505 | RH 111: Table Location 5 | CLIENT-PROVIDED CPU | 5 | RH 111: Table Location 5 | EXTRON SW8 HDMI | SWITCHER-005 |
| | EXTRON HDMI ULTRA/12 | HDMI-506 | RH 111: Table Location 5 | CLIENT-PROVIDED CPU | 6 | RH 111: Table Location 5 | EXTRON SW8 HDMI | SWITCHER-005 |
| | EXTRON HDMI ULTRA/6 | HDMI-511 | RH 111: Table Location 5 | EXTRON SW8 HDMI | SWITCHER-005 | RH 111: Table Location 5 | EXTRON DTP T HD2 4K 230 | DTP_TX-005 |
| | EXTRON HDMI ULTRA/12 | HDMI-512 | RH 111: Table Location 5 | EXTRON DTP T HD2 4K 230 | DTP_TX-005 | Projector Location Table 5 | EPSON PowerLite 585W | PROJECTOR-005 |
| | Chariot CTRL 2C22 NONPLENUM | CTRL-036 | RH 111: Table Location 5 | EXTRON MAAP CC SWITCH | 1 | RH 111: Table Location 5 | EXTRON SW8 HDMI | SWITCHER-005 |
| | Chariot CTRL 2C22 NONPLENUM | CTRL-037 | RH 111: Table Location 5 | EXTRON MAAP CC SWITCH | 2 | RH 111: Table Location 5 | EXTRON SW8 HDMI | SWITCHER-005 |
| | Chariot CTRL 2C22 NONPLENUM | CTRL-038 | RH 111: Table Location 5 | EXTRON MAAP CC SWITCH | 3 | RH 111: Table Location 5 | EXTRON SW8 HDMI | SWITCHER-005 |
| | Chariot CTRL 2C22 NONPLENUM | CTRL-039 | RH 111: Table Location 5 | EXTRON MAAP CC SWITCH | 4 | RH 111: Table Location 5 | EXTRON SW8 HDMI | SWITCHER-005 |
| | Chariot CTRL 2C22 NONPLENUM | CTRL-040 | RH 111: Table Location 5 | EXTRON MAAP CC SWITCH | 5 | RH 111: Table Location 5 | EXTRON SW8 HDMI | SWITCHER-005 |
| | Chariot CTRL 2C22 NONPLENUM | CTRL-041 | RH 111: Table Location 5 | EXTRON MAAP CC SWITCH | 6 | RH 111: Table Location 5 | EXTRON SW8 HDMI | SWITCHER-005 |
| | **RH 111: Ceiling** | | | | | | | |
| | Chariot CTRL 4C22 PLENUM | STP-001 | Rack Location | EXTRON PS 1220EB | PWRSUPPLY-001 | RH 111: Table Location 1 (daisy-chained to Table Locations 2-5) | EXTRON EPB 106 D | KEYPAD-001 |
| | **RH 111: Display Wall Location** | | | | | | | |
| | EXTRON HDMI ULTRA/6 | HDMI-016 | RH 111: Display Wall Location | EXTRON DTP HDMI 4K 230 RX | DTP_RX-006 | RH 111: Display Wall Location | EPSON BrightLink Pro 1430Wi | INT_PROJ-006 |
| | C2G USB A-B/M-M 1M BK | USB-001 | RH 111: Display Wall Location | NTI USB-C5-LC | USB_RX-001 | RH 111: Display Wall Location | EPSON BrightLink Pro 1430Wi | INT_PROJ-006 |
| | Chariot CAT6 UTP PLENUM | UTP-001 | RH 111: Display Wall Location | NTI USB-C5-LC | USB_TX-001 | RH 111: Display Wall Location | C2G USB A-B/M-M 1M BK | USB-001 |
| | Chariot CTRL 4C22 NONPLENUM | CTRL-006 | RH 111: Display Wall Location | EXTRON DTP HDMI 4K 230 RX | DTP_RX-006 | RH 111: Display Wall Location | EPSON BrightLink Pro 1430Wi | INT_PROJ-006 |
| | **RH 111: Rack Location** | | | | | | | |
| | Chariot XTP DTP 24 PLENUM | DTP-006 | Rack Location | EXTRON DTP HDMI 4K 230 TX | | RH 111: Display Wall Location | EXTRON DTP HDMI 4K 230 RX | DTP_RX-006 |
| | EXTRON HDMI ULTRA/6 | HDMI-001 | Rack Location | EXTRON DTP HDMI 4K 230 RX | DTP_RX-100 | Rack Location | EXTRON DXP 88 HD 4K | VID_MATRIX-001 |
| | EXTRON HDMI ULTRA/6 | HDMI-002 | Rack Location | EXTRON DTP HDMI 4K 230 RX | DTP_RX-200 | Rack Location | EXTRON DXP 88 HD 4K | VID_MATRIX-001 |

| | | | FROM | | | TO | | |
|---|---|---|---|---|---|---|---|---|
| **OK** | **Cable Description** | **Cable ID** | **Location** | **Manufacturer - Model** | **Component ID** | **Location** | **Manufacturer - Model** | **Component ID** |
| | EXTRON HDMI ULTRA/6 | HDMI-003 | Rack Location | EXTRON DTP HDMI 4K 230 RX | DTP_RX-300 | Rack Location | EXTRON DXP 88 HD 4K | VID_MATRIX-001 |
| | EXTRON HDMI ULTRA/6 | HDMI-004 | Rack Location | EXTRON DTP HDMI 4K 230 RX | DTP_RX-400 | Rack Location | EXTRON DXP 88 HD 4K | VID_MATRIX-001 |
| | EXTRON HDMI ULTRA/6 | HDMI-005 | Rack Location | EXTRON DTP HDMI 4K 230 RX | DTP_RX-500 | Rack Location | EXTRON DXP 88 HD 4K | VID_MATRIX-001 |
| | EXTRON HDMI ULTRA/6 | HDMI-007 | Rack Location | EXTRON DTP HDMI 4K 230 RX | DTP_RX-700 | Rack Location | EXTRON DXP 88 HD 4K | VID_MATRIX-001 |
| | EXTRON HDMI ULTRA/6 | HDMI-008 | Rack Location | EXTRON DXP 88 HD 4K | VID_MATRIX-001 | Rack Location | EXTRON DTP HDMI 4K 230 TX | DTP_TX-008 |
| | EXTRON HDMI ULTRA/6 | HDMI-009 | Rack Location | EXTRON DXP 88 HD 4K | VID_MATRIX-001 | Rack Location | EXTRON DTP HDMI 4K 230 TX | DTP_TX-009 |
| | EXTRON HDMI ULTRA/6 | HDMI-010 | Rack Location | EXTRON DXP 88 HD 4K | VID_MATRIX-001 | Rack Location | EXTRON DTP HDMI 4K 230 TX | DTP_TX-010 |
| | EXTRON HDMI ULTRA/6 | HDMI-011 | Rack Location | EXTRON DXP 88 HD 4K | VID_MATRIX-001 | Rack Location | EXTRON DTP HDMI 4K 230 TX | DTP_TX-011 |
| | EXTRON HDMI ULTRA/6 | HDMI-012 | Rack Location | EXTRON DXP 88 HD 4K | VID_MATRIX-001 | Rack Location | EXTRON DTP HDMI 4K 230 TX | DTP_TX-012 |
| | EXTRON HDMI ULTRA/6 | HDMI-013 | Rack Location | EXTRON DXP 88 HD 4K | VID_MATRIX-001 | Rack Location | EXTRON DTP HDMI 4K 230 TX | DTP_TX-013 |
| | | | | | | | | |
| | EXTRON HDMI ULTRA/6 | HDMI-600 | RH 111: Lectern | OFE ROOM PC | CPU_PC-001 | RH 111: Lectern | CLIENT-PROVIDED MONITOR | |
| | EXTRON HDMI ULTRA/6 | HDMI-612 | RH 111: Lectern | OFE ROOM PC | CPU_PC-001 | RH 111: Lectern | EXTRON DTP T USW 233 | DTP_TX-007 |
| | Chariot CTRL 4C22 NONPLENUM | CTRL-014 | Rack Location | EXTRON IPCP PRO 550 | CONTROLLER-001 | RH 111: Lectern | EXTRON DTP T USW 233 | DTP_TX-007 |
| | Chariot AUD 2C22 NONPLENUM | AUD-001 | Rack Location | SHURE SLX14/85 | MICROPHONE-006 | Rack Location | EXTRON DMP 128 PLUS C V | DSP-002 |
| | Chariot AUD 2C22 NONPLENUM | AUD-002 | Rack Location | EXTRON DXP 88 HD 4K | VID_MATRIX-001 | Rack Location | EXTRON DMP 128 PLUS C V | DSP-002 |
| | Chariot AUD 2C22 NONPLENUM | AUD-003 | Rack Location | EXTRON DMP 128 PLUS C V | DSP-002 | Rack Location | EXTRON MPA 401 | AUD_AMP-001 |
| | Chariot AUD 2C22 PLENUM | AUD-004 | Rack Location | EXTRON DMP 128 PLUS C V | DSP-002 | RH 111: Lectern | OFE ROOM PC | CPU_PC-001 |
| | Chariot SPKR 2C18 PLENUM | SPK-001 | Rack Location | EXTRON MPA 401 | AUD_AMP-001 | RH 111: Ceiling | EXTRON SF 26CT | CEIL_SPKR-001 |
| | Chariot SPKR 2C18 PLENUM | SPK-002 | RH 111: Ceiling | EXTRON SF 26CT | CEIL_SPKR-001 | RH 111: Ceiling | EXTRON SF 26CT | CEIL_SPKR-002 |
| | Chariot SPKR 2C18 PLENUM | SPK-003 | RH 111: Ceiling | EXTRON SF 26CT | CEIL_SPKR-001 | RH 111: Ceiling | EXTRON SF 26CT | CEIL_SPKR-003 |

| | | | FROM | | | TO | | |
|---|---|---|---|---|---|---|---|---|
| **OK** | **Cable Description** | **Cable ID** | **Location** | **Manufacturer - Model** | **Component ID** | **Location** | **Manufacturer - Model** | **Component ID** |
| | Chariot SPKR 2C18 PLENUM | SPK-004 | RH 111: Ceiling | EXTRON SF 26CT | CEIL_SPKR-002 | RH 111: Ceiling | EXTRON SF 26CT | CEIL_SPKR-004 |
| | Chariot CAT6 UTP PLENUM | UTP-006 | RH 111 | EXTRON XTP PI 100 | POE_INJ-001 | RH 111: Lectern | EXTRON TLP PRO 1022T | TOUCHPANEL-002 |
| | Chariot CAT6 UTP PLENUM | UTP-007 | RH 111 | CLIENT LAN | LAN-001 | RH 111: Rack | EXTRON IPCP PRO 550 | CONTROLLER-001 |
| | Chariot CAT6 UTP PLENUM | *unamed | RH 111 | CLIENT LAN | LAN-001 | RH 111: Rack | EXTRON XTP PI 100 | POE_INJ-001 |
| | Chariot CAT6 UTP PLENUM | *unamed | RH 111 | CLIENT LAN | LAN-001 | RH 111: Lectern | OFE ROOM PC | CPU_PC-001 |
| | Chariot CAT6 UTP PLENUM | *unamed | RH 111 | CLIENT LAN | LAN-001 | RH 111: Rack | EXTRON DMP 128 PLUS C | DSP-001 |
| | Chariot CAT6 UTP PLENUM | *unamed | RH 111 | CLIENT LAN | LAN-001 | RH 111: Rack | EXTRON DXP 88 HD 4K | VID_MATRIX-001 |
| | Chariot CAT6 UTP PLENUM | VOIP | RH 111 | CLIENT LAN | LAN-001 | RH 111: Rack | EXTRON DMP 128 PLUS C V | DSP-002 |
| RH 111: Lectern | | | | | | | | |
| | EXTRON RETRACTOR XL/2 VGA-A | *integrated cable | | RH 111: Lectern | | RH 111: Lectern | EXTRON DTP T USW 233 | DTP_TX-007 |
| | EXTRON RETRACTOR XL/2 HDMI | *integrated cable | | RH 111: Lectern | | RH 111: Lectern | EXTRON DTP T USW 233 | DTP_TX-007 |
| | VADDIO INCLUDED USB A-B/M-M/6 | USB-002 | RH 111: Lectern | VADDIO QC USB | VID_CONVER-001 | RH 111: Lectern | OFE ROOM PC | CPU_PC-001 |
| | VADDIO INCLUDED USB A-B/M-M/6 | USB-003 | RH 111: Lectern | VADDIO QC USB | VID_CONVER-002 | RH 111: Lectern | OFE ROOM PC | CPU_PC-001 |
| | Chariot XTP DTP 24 PLENUM | DTP-013 | RH 111: Lectern | EXTRON DTP T USW 233 | DTP_TX-007 | RH 111: Rack | EXTRON DTP HDMI 4K 230 RX | DTP_RX-700 |
| | Chariot CAT6 UTP PLENUM | UTP-002 | RH 111: Lectern | VADDIO ROBOSHOT 12 | CAMERA-001 | RH 111: Lectern | VADDIO QC USB | VID_CONVER-001 |
| | Chariot CAT6 UTP PLENUM | UTP-003 | RH 111: Lectern | VADDIO ROBOSHOT 12 | CAMERA-001 | RH 111: Lectern | VADDIO QC USB | VID_CONVER-001 |
| | Chariot CAT6 UTP PLENUM | UTP-004 | RH 111: Lectern | VADDIO ROBOSHOT 12 | CAMERA-002 | RH 111: Lectern | VADDIO QC USB | VID_CONVER-002 |
| | Chariot CAT6 UTP PLENUM | UTP-005 | RH 111: Lectern | VADDIO ROBOSHOT 12 | CAMERA-002 | RH 111: Lectern | VADDIO QC USB | VID_CONVER-002 |

This page intentionally left blank.

# APPENDIX C

This page intentionally left blank.

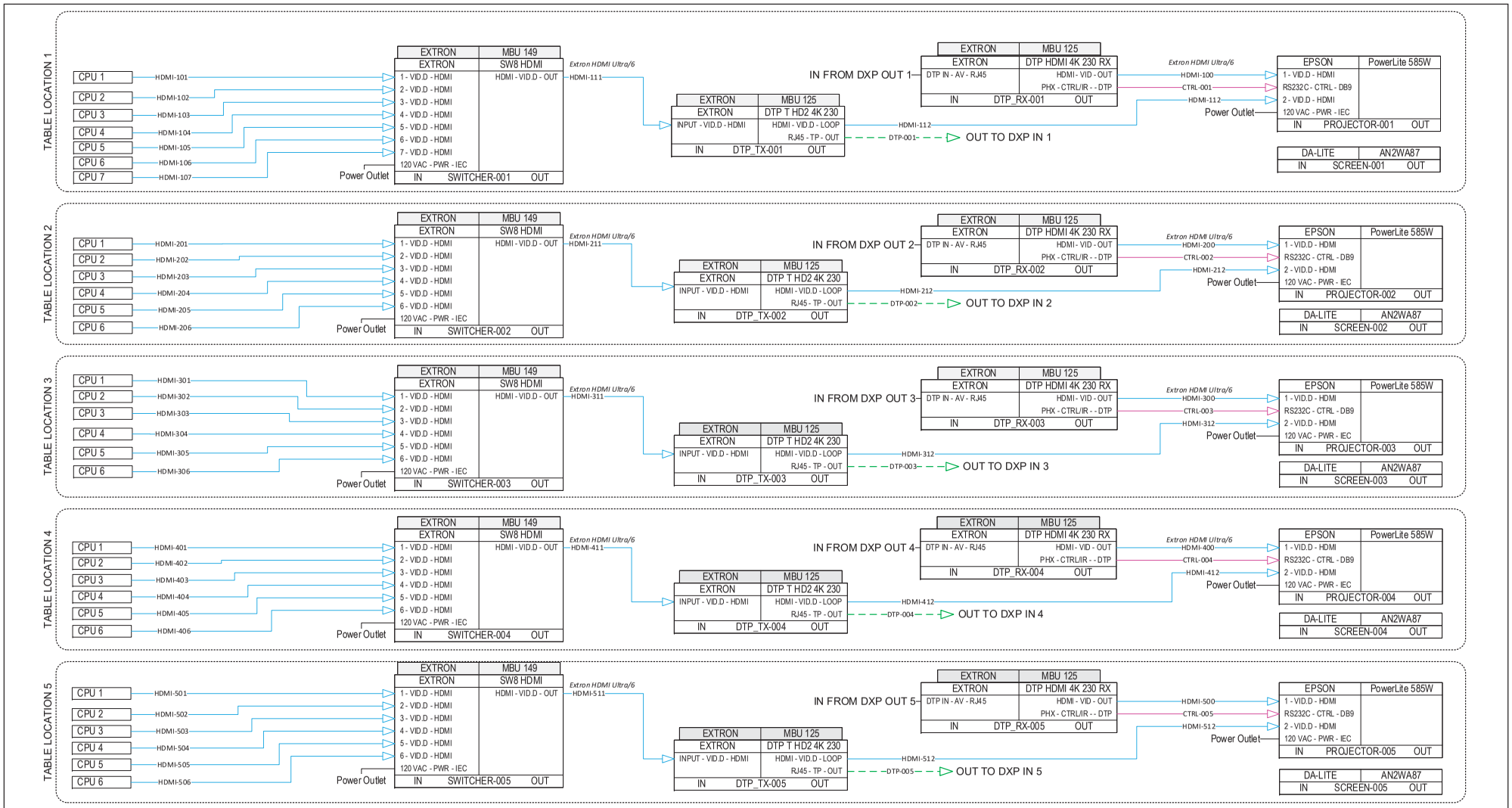


THE CHARIOT GROUP
907.222.5300
www.chariotgroup.com
Connecting People and Ideas...

| Revision No. | A | B | C | |
|---|---|---|---|---|
| Description: | Issued For Review | Issued For Coordination | Issued For Coordination | |
| Drawn By: | J. Brisson 2-23-17 | J. Brisson 2-24-17 | J. Brisson 3-14-17 | |
| Reviewed: | | D. Johnson 2-24-17 | D. Johnson 3-14-17 | |
| Approved: | | | | |
| Approved: | | | | |

**Notes:**

HDMI cables shall be Extron 12' HDMI Ultra, except where noted
CTRL cable shall be 4C22 control cable

Drawing Type: **Video**
Page: **1**
Status: **IFC**

Project Number: **17-017**

Project Name: **UAA Rasmuson Hall - Rm 111**

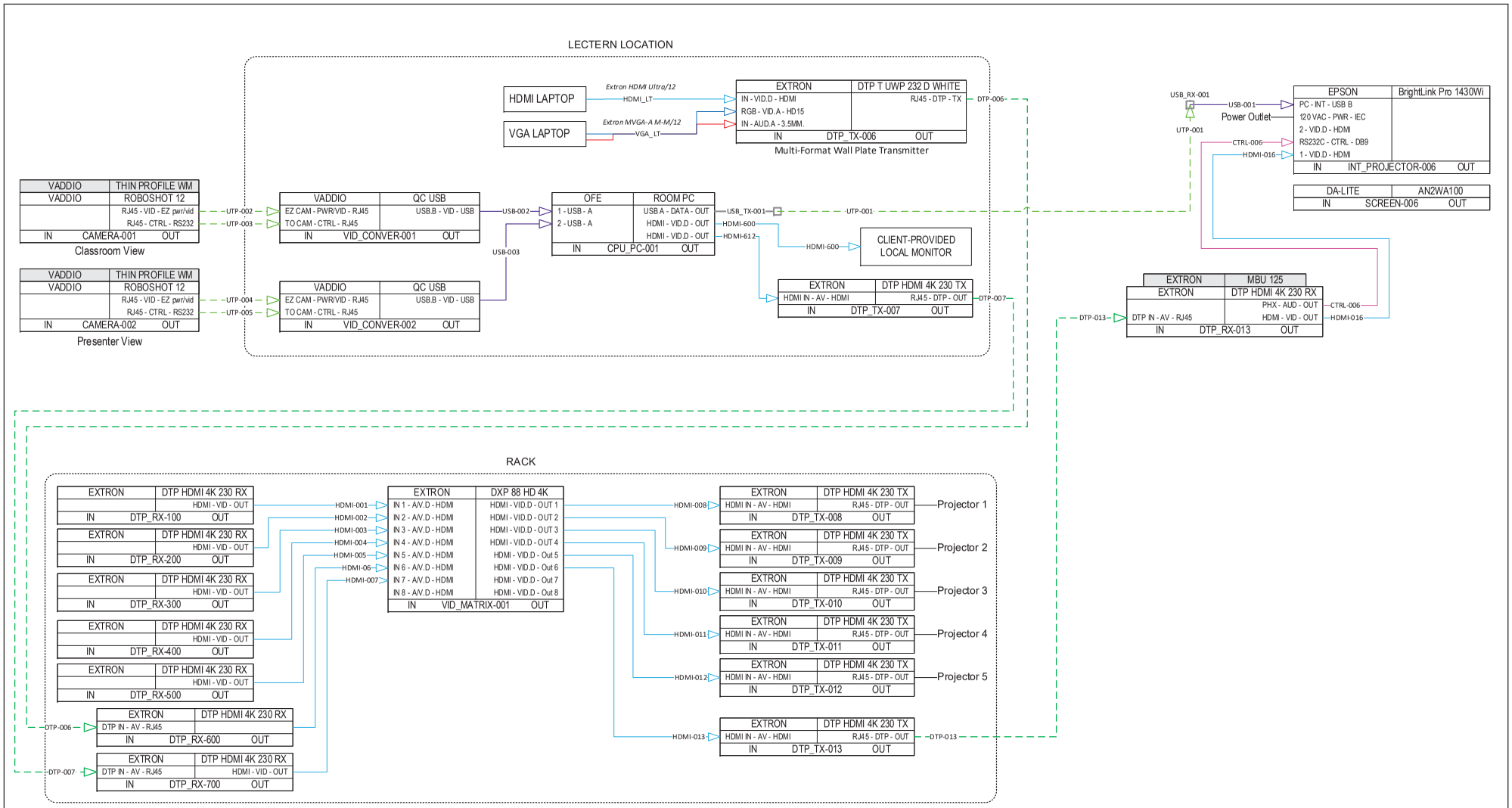


THE CHARIOT GROUP
907.222.5300
www.chariotgroup.com
Connecting People and Ideas...

| Revision No. | A | B | C | |
|---|---|---|---|---|
| Description: | Issued For Review | Issued For Coordination | Issued For Coordination | |
| Drawn By: | J. Brisson 2-23-17 | J. Brisson 2-24-17 | J. Brisson 3-14-17 | |
| Reviewed: | | D. Johnson 2-24-17 | D. Johnson 3-14-17 | |
| Approved: | | | | |
| Approved: | | | | |

**Notes:**

HDMI cables shall be Extron 6' HDMI Ultra, except where noted
USB Extender: NTI USB-C5-LC or equiv.
USB 2.0 cable shall be A-type M to B-type M
DTP cable shall be Extron XTP DTP 24 plenum
UTP cable shall be Cat5e or Cat6 plenum
CTRL cable shall be 4C22 control cable

Drawing Type: **Video Continued**
Page: **2**
Status: **IFC**

Project Number: **17-017**

Project Name: **UAA Rasmuson Hall - Rm 111**

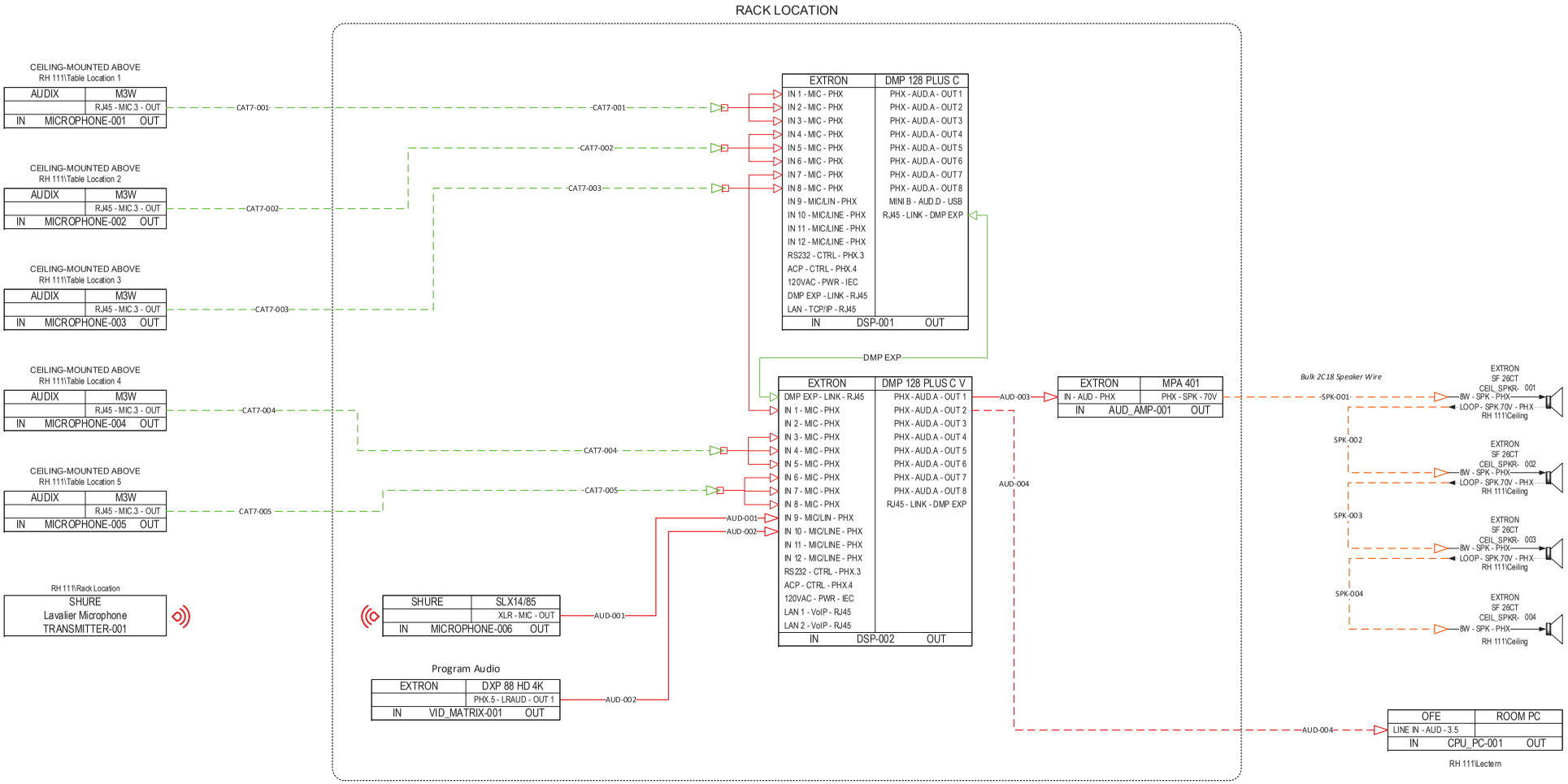


THE CHARIOT GROUP
907.222.5300
www.chariotgroup.com
Connecting People and Ideas...

| Revision No. | A | B | C | |
|---|---|---|---|---|
| Description: | Issued For Review | Issued For Coordination | Issued For Coordination | |
| Drawn By: | J. Brisson 2-23-17 | J. Brisson 2-24-17 | J. Brisson 3-14-17 | |
| Reviewed: | | D. Johnson 2-24-17 | D. Johnson 3-14-17 | |
| Approved: | | | | |
| Approved: | | | | |

**Notes:**

AUD cable shall be 2C22 shielded audio cable, except where noted

CAT7 shall be Audix SFTP M3 Interface Cable

USB 2.0 cable shall be Mini-B M to A-type M

Drawing Type: **Audio**

Page: **3**

Status: **IFC**

Project Number: **17-017**

Project Name: **UAA Rasmuson Hall - Rm 111**

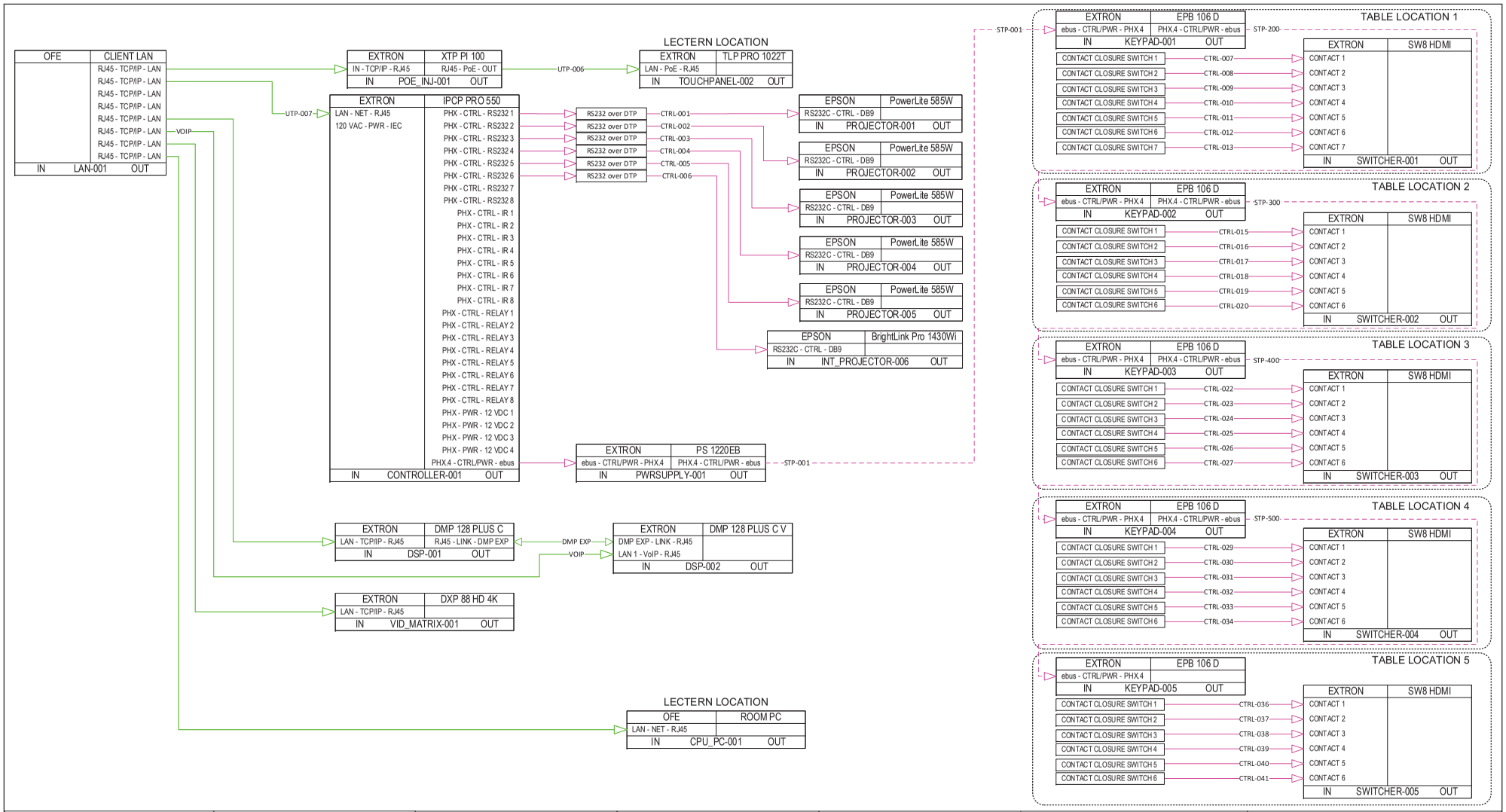


THE CHARIOT GROUP
907.222.5300
www.chariotgroup.com
Connecting People and Ideas...

| Revision No. | A | B | C | |
|---|---|---|---|---|
| Description: | Issued For Review | Issued For Coordination | Issued For Coordination | |
| Drawn By: | J. Brisson 2-23-17 | J. Brisson 2-24-17 | J. Brisson 3-14-17 | |
| Reviewed: | | D. Johnson 2-24-17 | D. Johnson 3-14-17 | |
| Approved: | | | | |
| Approved: | | | | |

**Notes:** EAO CONTACT CLOSURE SWITCH TYPICAL of all user control buttons

UTP cable shall be Cat6 patch cables
CTRL cable shall be 4C22 control cable

Drawing Type: **Control**
Page: **4**
Status: **IFC**

Project Number: **17-017**

Project Name: **UAA Rasmuson Hall - Rm 111**

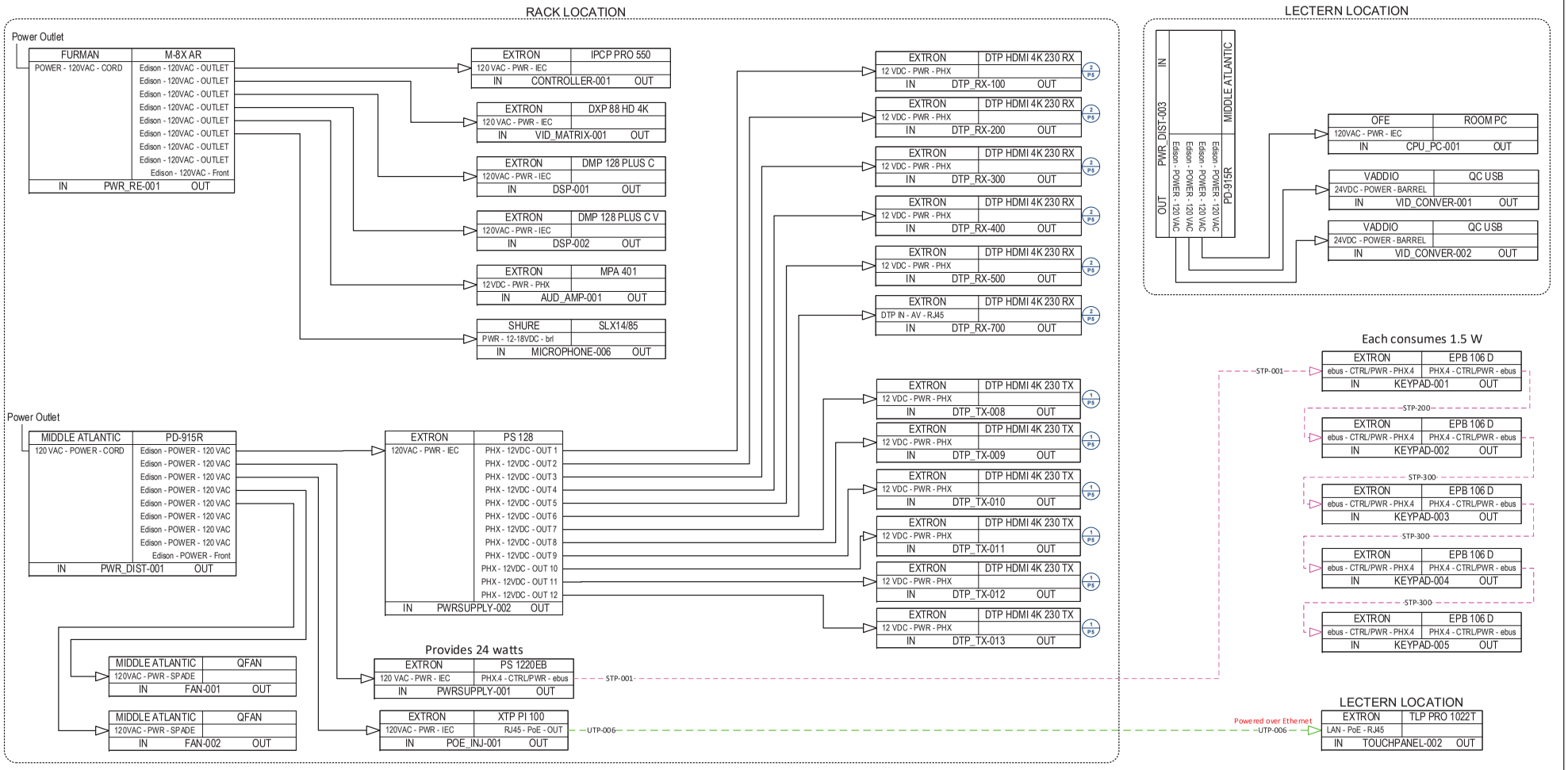


THE CHARIOT GROUP
907.222.5300
www.chariotgroup.com
Connecting People and Ideas...

| Revision No. | A | B | C | |
|---|---|---|---|---|
| Description: | Issued For Review | Issued For Coordination | Issued For Coordination | |
| Drawn By: | J. Brisson 2-23-17 | J. Brisson 2-24-17 | J. Brisson 3-14-17 | |
| Reviewed: | | D. Johnson 2-24-17 | D. Johnson 3-14-17 | |
| Approved: | | | | |
| Approved: | | | | |

**Notes:**

1 PS — DTP HDMI 4K 230 TX (transmitters) supply power to end point receivers over DTP.

2 PS — DTP HDMI 4K 230 RX (receivers) supply power to end point transmitters over DTP.

STP cable shall be Extron STP20-2

Drawing Type: **Power**
Page: **5**
Status: **IFC**

Project Number: **17-017**

Project Name: **UAA Rasmuson Hall - Rm 111**

CONTACT CLOSURE SWITCH 1

| EXTRON | PS 128 |
|---|---|
| | PHX - 12VDC - OUT 1 |
| IN PWRSUPPLY-003 OUT | |

Black/Red
CTRL-007

| EAO | SWITCH |
|---|---|
| PWR - 12VDC - solder tab | solder tab - CTRL - RELAY |
| IN CTRL_RELAY-001 OUT | |

White/Green
CTRL-007

| EXTRON | SW8 HDMI |
|---|---|
| contact - CTRL - PHX.8 | |
| IN SWITCHER-001 OUT | |

EAO Illuminated PUSHBUTTON, 19mm, STAINLESS STEEL RING, 12VDC, MOMENTARY, ROUND, BLUE LED

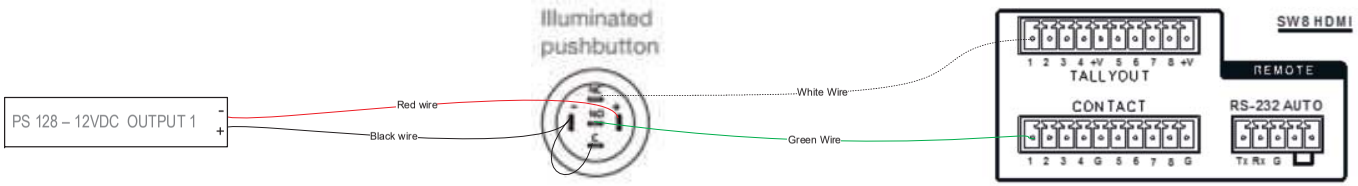


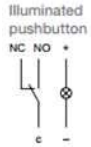


THE CHARIOT GROUP
907.222.5300
www.chariotgroup.com
Connecting People and Ideas...

| Revision No. A | Revision No. B | Revision No. C | Revision No. |
|---|---|---|---|
| Description: Issued For Review | Description: Issued For Coordination | Description: Issued For Coordination | Description: |
| Drawn By: J. Brisson 2-23-17 | Drawn By: J. Brisson 2-24-17 | Drawn By: J. Brisson 3-14-17 | Drawn By: |
| Reviewed: | Reviewed: D. Johnson 2-24-17 | Reviewed: D. Johnson 3-14-17 | Reviewed: |
| Approved: | Approved: | Approved: | Approved: |
| Approved: | Approved: | Approved: | Approved: |

**Notes:**

TYPICAL of all contact closure switches
*Wiring shall be 4C22 control cable

Drawing Type: **Switch Detail**
Page: **6**
Status: **IFC**

Project Number: **17-017**

Project Name: **UAA Rasmuson Hall - Rm 111**

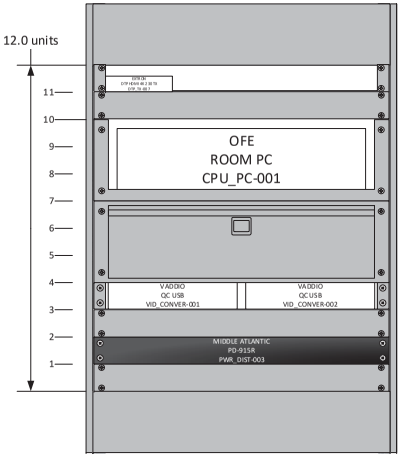


CLIENT-PROVIDED
DEWEY LECTERN
LECTERN-001

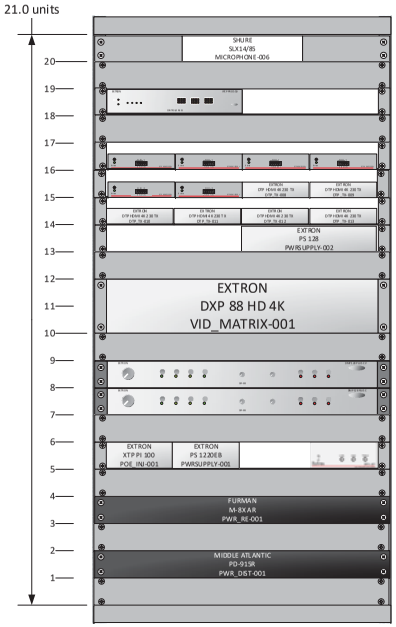


CLIENT-PROVIDED
DEWEY MEDIA CABINET
RACK-001

THE CHARIOT GROUP
907.222.5300
www.chariotgroup.com
Connecting People and Ideas...

| Revision No. A | Revision No. B | Revision No. C | Revision No. |
|---|---|---|---|
| **Description:** Issued For Review | **Description:** Issued For Coordination | **Description:** Issued For Coordination | **Description:** |
| Drawn By: J. Brisson 2-23-17 | Drawn By: J. Brisson 2-24-17 | Drawn By: J. Brisson 3-14-17 | Drawn By: |
| Reviewed: | Reviewed: D. Johnson 2-24-17 | Reviewed: D. Johnson 3-14-17 | Reviewed: |
| Approved: | Approved: | Approved: | Approved: |
| Approved: | Approved: | Approved: | Approved: |

**Notes:**

Install (2) Middle Atlantic QFAN's in rear of rack cabinet for air exhaust and thermal management.

Drawing Type: **Rack Elevation**
Page: **7**
Status: **IFC**

Project Number: **17-017**

Project Name: **UAA Rasmuson Hall - Rm 111**

This page intentionally left blank.