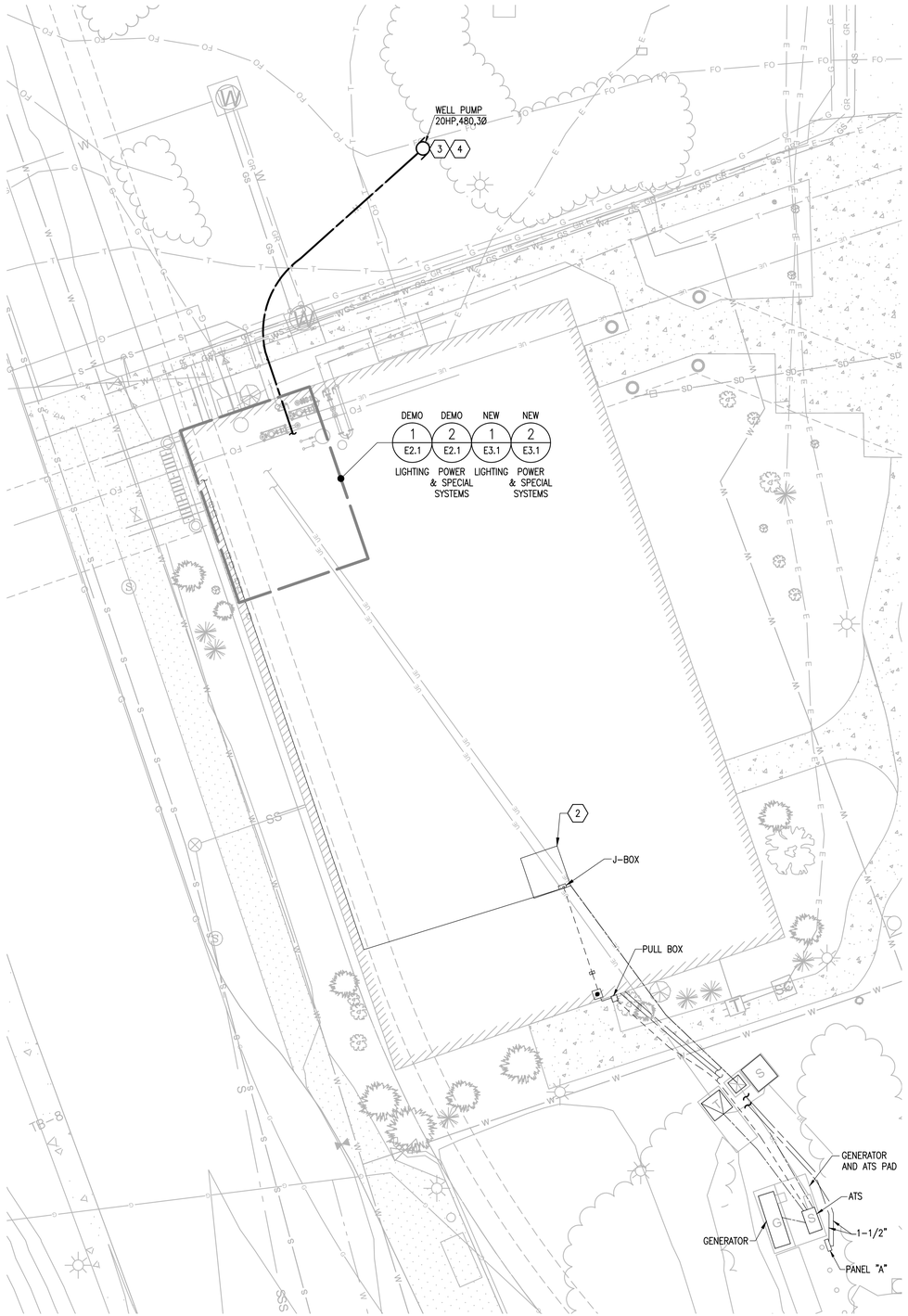

1 E1.0 SITE PLAN

SCALE: 1/16" = 1'-0"

0 8' 16' 32' 48'

NOTIFICATION OF POTENTIAL HAZARD

ASBESTOS CONTAINING MATERIAL (ACM) IS PRESENT IN THE BUILDING THAT MAY IMPACT THE WORK OF ALL TRADES. THE CONTRACTOR SHALL REQUIRE THEIR PERSONNEL AND ALL SUBCONTRACTOR PERSONNEL TO COORDINATE WITH OTHER TRADES AND CONDUCT THEIR WORK TO PREVENT WORKER EXPOSURE OR SITE CONTAMINATION. REFER TO DIVISION 01 AND 02 SPECIFICATIONS FOR SPECIFIC INFORMATION CONCERNING REMOVING AND DISPOSING OF THESE MATERIALS AND THE INSTALLATION OF NEW MATERIALS AND COMPONENTS. THIS NOTIFICATION IS PROVIDED IN ACCORDANCE WITH EPA AND OSHA REQUIREMENTS.

SHEET NOTES

1. SITE INFORMATION INCLUDING EQUIPMENT LOCATIONS, CONDUIT, FEEDER LOCATIONS, AND ROUTING BASED UPON AS-BUILT DOCUMENTATION. FIELD VERIFY ALL. COORDINATE WITH UAA TO PERFORM LOCATES.

(2) APPROXIMATE LOCATION OF EXISTING ELECTRICAL ROOM ON THE LOWER LEVEL. UPPER LEVEL ELECTRICAL ROOM IS DIRECTLY ABOVE LOWER ELECTRICAL ROOM.

(3) LOCATION OF EXTERIOR WELL PUMP. REFER TO SHEET E3.1 FOR LOCATION OF VSD. PROVIDE OUTPUT FILTER/REACTOR FOR VSD BASED ON DISTANCE TO WELL PUMP.

(4) REFER TO DETAIL 2/E1.0 AND CIVIL DRAWINGS FOR TRENCH DETAIL AT WELL PUMP.

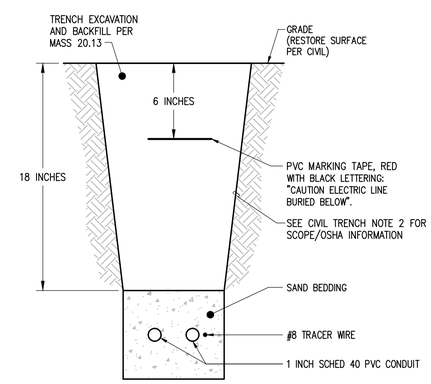

2 E1.0 DETAIL – WELL PUMP TRENCH – 2@ 1 INCH DUCT

SCALE: NONE

AMC ENGINEERS
www.amc-engineers.com
Adams, Morgenthaler & Co., Inc.
CoA No. C0342 - 907.257.9100
701 E. Tudor Rd. Suite 250
Anchorage, AK 99503

STATE OF ALASKA 49TH
John E. Hood
03/06/2017
EE-13361
REGISTERED PROFESSIONAL ENGINEER
© 16601

UAA UNIVERSITY of ALASKA ANCHORAGE

NSB EM-2 MECHANICAL SYSTEMS CONVERSION/UPGRADE

Revisions

No.	Date	Description

Design:	JEH
Drawn:	MPL
UAA Project No.:	16-0103
Date:	02/17/2017

Sheet Title
SITE PLAN

Sheet Number
E1.0

100% CONSTRUCTION DOCUMENTS

FILE NAME: X:\16601 NSBBOIL\Dwgs\Edwg\Sheet Files\16601 – E1.0.dwg
PLOTTED: MPL 03/06/2017 11:02:16 AM