INVITATION TO BID

McLaughlin Youth Center AHU Upgrades
ANC 15-04C

Bidders are invited to submit sealed bids, in single copy, to: Provide all labor, supervision, equipment, materials and permits to replace/upgrade the air handling units in the probation wing and detention court areas as outlined in the specifications and drawings. We are requesting quotes for the Basic Bid and three (3) additive alternates. Construction is scheduled to begin Spring 2015.

A Pre-Bid walk through is scheduled for Thursday, August 14, 2014 at 9:00 am at the Facility

Project related questions or clarifications: Mark Moon, Project Manager at 269-7812.

Bids will be opened publicly at 2:00 pm local time September 3, 2014 at 3601 C Street, Room 578, Anchorage, AK.

Bids, modifications or withdrawals transmitted by mail must be received no later than 30 minutes prior to the scheduled time of bid opening.

Linda Kush at 3601 C Street, Suite 578 Anchorage AK must receive hand-delivered bids, modifications or withdrawals prior to the scheduled time of bid opening.

Faxed bid modifications must be addressed to:
DHSS/FMS/Facilities - ATTN: Linda Kush - Fax number: (907) 334-2689

The Engineer's Estimate: Less than $675,000

The Project completion date: September 30, 2015

Plans and Specifications may be printed by the Bidder from:

- the State of Alaska website (www.state.ak.us) Public Notices Online button, click on the More Public Notices button, Browse Active Public Notice button, then Health & Social Services, and Procurement

OR

- the Bidder may forward the project website location/address information to the print shop of their choice for printing – all associated printing costs are payable by the Bidder

Bidders are responsible for checking this website for addenda. Not acknowledging addenda at the time of bid will deem the Bidder non-responsive.

Issued: August 8, 2014

McLaughlin Youth Center Air Handling Unit Upgrades
Anchorage, AK
PROJECT NO. ANC 15-04C

TABLE OF CONTENTS

BIDDING AND CONTRACT REQUIREMENTS - STATE FUNDED PROJECTS

McLaughlin Youth Center Air Handling Unit Upgrades
Anchorage, AK
PROJECT NO. ANC 15-04C

TABLE OF CONTENTS CONTINUED

McLaughlin Youth Center Air Handling Unit Upgrades
Anchorage, AK
PROJECT NO. ANC 15-04C

DIVISION 16 - ELECTRICAL

End of Table of Contents

STATE OF ALASKA
DEPARTMENT OF HEALTH & SOCIAL SERVICES

INVITATION TO BID

for Construction Contract

Date August 8, 2014

McLaughlin Youth Center AHU Upgrades – ANC 15-04C

Project Name and Number

Location of Project: 2600 Providence Drive Anchorage, Alaska

Contracting Officer: Jennifer Klein

Issuing Office: Dept. of Health & Social Services, Office of the Commissioner, Finance & Management Services

State Funded [X] Federal Aid [ ]

Description of Work:
Provide all labor, supervision, equipment, materials and permits to replace/upgrade the air handling units in the probation wing and detention court areas as outlined in the specifications and drawings. This project replaces three air handling units in the Probation Wing subfloor utility space, the installation of a Glycol system, and a replacement of various reheat coils in the facility.

Additive Alternate # 1: Conversion of Johnson Controls DDC Graphics to Siemens DDC System and additional DDC points for heat exchanger pumps. **Additive Alternate # 2**: Installing mechanical cooling in the air handlers serving the Probation Wing. **Additive Alternate # 3:** Detention core lights and receptacles.

Construction scheduled to begin Spring 2015.

A Pre-bid walk through is scheduled for August 14, 2014 at 9:00 am at the Facility. Bidders are encouraged to attend.

The Engineer's Estimate is: Less than $675,000.00

All work shall be completed by **September 30, 2015**.
Interim Completion dates, if applicable, will be shown in the Special Provisions.

Bidders are invited to submit sealed bids, in single copy, for furnishing all labor, equipment, and materials and for performing all work for the project described above. **Bids will be opened publicly at 2:00 pm local time, at 3601 C Street, Suite 578 Anchorage, AK 99503 on the 3rd day of September, 2014.**

SUBMISSION OF BIDS

ALL BIDS INCLUDING ANY AMENDMENTS OR WITHDRAWALS MUST BE RECEIVED PRIOR TO BID OPENING. BIDS SHALL BE SUBMITTED ON THE FORMS FURNISHED AND MUST BE IN A SEALED ENVELOPE MARKED AS FOLLOWS:

Bid for Project: **ANC 15-04C MYC AHU Upgrades**	**ATTN: Linda Kush** **State of Alaska** **Department of Health and Social Services** **Finance & Management Services, Facilities Office** **3601 C Street, Suite 578 Anchorage, AK 99503**

Bids, amendments or withdrawals transmitted by mail must be received in the above specified post office box no later than **30 minutes** prior to the scheduled time of bid opening. Hand-delivered bids, amendments or withdrawals must be received at **3601 C Street, Suite 578 Anchorage, AK** prior to the scheduled time of bid opening. Faxed bid amendments must be addressed to **Linda Kush**. Fax number: (907) 334-2689.

A bid guaranty is required with each bid in the amount of 5% of the amount bid. (Alternate bid items as well as supplemental bid items appearing on the bid schedule shall be included as part of the total amount bid when determining the amount of bid guaranty required for the project.)

The Department hereby notifies all bidders that it will affirmatively insure that in any contract entered into pursuant to this Invitation, Disadvantaged Business Enterprises (DBEs) will be afforded full opportunity to submit bids and will not be discriminated against on the grounds of race, color, national origin, or sex in consideration for an award.

NOTICE TO BIDDERS

Bidders are hereby notified that data to assist in preparing bids is available as follows: N/A

Plans and Specifications may be printed by the Bidder from:

- the State of Alaska website (www.state.ak.us) Public Notices Online button, click on the More Public Notices button, Browse Active Public Notice button, then Health & Social Services, and Procurement

OR

- the Bidder may forward the project website location/address information to the print shop of their choice for printing – all associated printing costs are payable by the Bidder

---

All questions relating to technical aspects of the project should be directed to the following. Bidders requesting assistance in viewing the project must make arrangements at least 48 hours in advance with:

Project Manager: Mark Moon

Fax: (907) 334-2689 Phone: (907) 269-7812 Email: mark.moon@alaska.gov

---

All questions concerning bidding procedures should be directed to:

DHSS/Division of Finance & Management Services, Facilities
3601 C Street, Suite Anchorage, AK 99503
ATTN: Linda Kush
Phone: (907) 269-7813
Email: linda.kush@alaska.gov

Other Information:

Alaska Veterans Preference
To qualify for the Veterans Preference (per AS 36.30.175), the bidder must:

1. Qualify for the Alaska Bidder's Preference
2. Add value by actually performing the services or have prior experience in selling the supplies
3. Qualify as an Alaska Veteran & Complete/sign Alaska Veterans Affidavit (06D-17, dated 4/12)
4. The value of the preference cannot exceed $5,000.

STATE OF ALASKA
DEPARTMENT OF HEALTH & SOCIAL SERVICES

INFORMATION TO BIDDERS

The Department is concerned over the manner in which bids are submitted. Bidders are requested to study and follow the bid assembly instructions as to the method and form for submitting bids so there will be no reason to reject a bid.

EXAMINATION OF CONTRACT REQUIREMENTS

Bidders are expected to examine carefully the plans, specifications and all other documents incorporated in the contract to determine the requirements thereof before preparing bids.

Any explanation desired by bidders regarding the meaning or interpretation of drawings and specifications must be requested in writing and with sufficient time allowed for a reply to reach them before the submission of their bids. Oral explanations or instructions given before the award of the contract will not be binding. Any interpretation made will be in the form of an addendum to the specifications or drawings and will be furnished to all bidders and its receipt by the bidder shall be acknowledged.

CONDITIONS AT SITE OF WORK

Bidders are expected to visit the site to ascertain pertinent local conditions such as the location, accessibility and character of the site, labor conditions, the character and extent of the existing work within or adjacent thereto, and any other work being performed thereon.

PREPARATION OF BIDS

(a) Bids shall be submitted on the forms furnished, and must be manually signed in ink. If erasures or other changes appear on the forms, each such erasure or change must be initialed by the person signing the proposal.

(b) The bid schedule will provide for quotation of a price or prices for one or more pay items which may include unit price or lump sum items and alternative, optional or supplemental price schedules or a combination thereof which will result in a total bid amount for the proposed construction.

Where required on the bid form, bidders must quote on all items and THEY ARE WARNED that failure to do so will disqualify them. When quotations on all items are not required, bidders should insert the words "no bid" in the space provided for any item not requiring a quotation and for which no quotation is made.

(c) The bidder shall specify the price or prices bid in figures. On unit price contracts the bidder shall also show the products of the respective unit prices and quantities written in figures in the column provided for the purpose and the total amount of the proposal obtained by adding the amounts of the several items. All the figures shall be in ink or typed.

(d) Neither conditional nor alternative bids will be considered unless called for.

(e) Unless specifically called for, telegraphic or telefacsimile bids will not be considered.

(f) Bid Schedule form should be enclosed in a separate sealed envelope and enclosed with all other bidding forms required at the opening.

BID SECURITY

All bids shall be accompanied by a bid security in the form of an acceptable Bid Bond (Form 06D-14), or a certified check, cashier's check or money order made payable to the State of Alaska. The amount of the bid security is specified on the Invitation to Bid.

Bid Bonds must be accompanied by a legible Power of Attorney.

If the bidder fails to furnish an acceptable bid security with the bid, the bid shall be rejected as non-responsive. Telegraphic notification of execution of Bid Bond does not meet the requirement of bid security accompanying the bid. An individual surety will not be accepted as a bid security.

The bid securities of the two lowest bidders will be held by the Department until the Contract has been executed, after which such bid securities will be returned. All other bid securities will be returned as soon as practicable. If all bids are rejected, all bid securities will be returned as soon as practicable.

BIDDERS QUALIFICATIONS

Before a bid is considered for award, the bidder may be requested by the Department to submit a statement of facts, in detail, as to his previous experience in performing comparable work, his business and technical organization, financial resources, and plant available to be used in performing the contemplated work.

SUBMISSION OF BIDS

Bids must be submitted as directed on the Invitation for Bids. Do not include in the envelope any bids for other work.

ADDENDA REQUIREMENTS

The bid documents provide for acknowledgement individually of all addenda to the drawings and/or specifications on the signature page of the Proposal. All addenda shall be acknowledged on the Proposal or by telegram prior to the scheduled time of bid opening. If no addenda are received by the bidder, the word "None" should be shown as specified.

Every effort will be made by the Department to insure that Contractors receive all addenda when issued. Addenda will be issued to the individual or company to whom bidding documents were issued. Addenda may be issued by any reasonable method such as hand delivery, mail, telefacsimile, telegraph, email, internet download, courier and in special circumstances by phone. Addenda will be issued to the address, telefacsimile number or phone number as stated on the planholder's list unless picked up in person or included with the bid documents. It is the bidder's responsibility to insure that he has received all addenda affecting the Invitation for Bids. No claim or protest will be allowed based on the bidder's allegation that he did not receive all of the addenda

for an Invitation for Bids. The Department is not responsible for issuing addenda to non-registered bidders.

WITHDRAWAL OR REVISION OF BIDS

A bidder may withdraw or revise a bid after it has been deposited with the Department, provided that the request for such withdrawal or revision is received by the designated office, in writing, by telegram, or by telefacsimile, before the time set for opening of bids.

Telegraphic or telefacsimile modifications shall include both the modification of the unit bid price and the total modification of each item modified, but shall not reveal the amount of the total original or revised bids. Form 06D-16 shall be used to submit such modifications.

RECEIPT AND OPENING OF BIDS

(a) All bids, including any amendment or withdrawal must be received by the Department prior to the scheduled time of bid opening. Any bid, amendment, or withdrawal that has not been actually received by the Department prior to the time of the scheduled bid opening will not be considered.

(b) No responsibility will be attached to any officer or employee of the Department for the premature opening of, or failure to open, a bid improperly addressed or identified.

(c) The Department reserves the right to waive any technicality in bids received when such waiver is in the interest of the State.

BIDDERS PRESENT

At the time fixed for bid opening, bids will be publicly opened and read for the information of bidders and others properly interested, who may be present either in person or by representative. The amount of the bid and the name of the bidder shall be compiled and distributed as soon as possible after bid opening. Bids are not open for public inspection until after the Notice of Intent to Award is issued.

BIDDERS INTERESTED IN MORE THAN ONE BID

If more than one bid is offered by any one party, by or in the name of his or their clerk or partner, all such bids will be rejected. A party who has quoted prices to a bidder is not thereby disqualified from quoting prices to other bidders or from submitting a bid directly for the work.

REJECTION OF BIDS

The Department reserves the right to reject any and all bids when such rejection is in the best interest of the State; to reject the bid of a bidder who has previously failed to perform properly, or complete on time, contracts of a similar nature; to reject the bid of a bidder who is not, in the opinion of the Contracting Officer, in a position to perform the contract; and to reject a bid as non-responsive where the bidder fails to furnish the required documents, fails to complete required documents in the manner directed, or makes unauthorized alterations to the bid documents.

AWARD OF CONTRACT

(a) The letter of award, if the contract is to be awarded, will be issued to the lowest responsible and responsive bidder as soon as practical and usually within 40 calendar days after opening of proposals.

(b) The successful bidder will be notified of the Department's intent to award the contract and requested to execute certain documents, including the contract form and bonds.

(c) The contract will be awarded to the successful bidder following receipt by the Department of all required documents, properly executed, within the time specified in the intent to award. Failure to enter into a contract within the specified time shall be grounds for forfeiture of the bid security and consideration of the second low bidder for award.

END OF SECTION

STATE OF ALASKA
DEPARTMENT OF HEALTH & SOCIAL SERVICES

SUPPLEMENTARY INFORMATION TO BIDDERS

This document modifies or adds to the provisions of Department of Health & Social Services form 06D-3, INFORMATION TO BIDDERS.

Following subparagraph (c) under subject area "PREPARATION OF BIDS", add the following subparagraph:

"(C-1) When provided within the supplements to the bid schedule the Bidder shall specify those Alaska bidder and product preferences applicable to their bid. All entries made by the Bidder and designating applicable preferences must conform to the requirements of AS 36.30 and the instructions on the forms to warrant consideration."

Following subject area "REJECTION OF BIDS", add the following subject area:

"CONSIDERATION OF PROPOSALS

After the Proposals are opened and read, they will be compared on the basis identified on the bid schedule and the apparent low Bidder announced. The apparent low Bidder shall, within 5 working days following identification as the apparent low Bidder, submit a list of all firms with which the prime CONTRACTOR intends to execute subcontracts for the performance of the Contract. The list shall include the name, business address, Alaska business license number and contractor's registration number of each proposed Subcontractor.

Upon confirmation of the contents of the proposal the low Bidder will be identified by the DEPARTMENT by telephone and in writing. If the low Bidder differs from the apparent low Bidder then the requirements for Subcontractor listing, as noted above, shall become effective upon the low Bidder at the time of identification.

If a Bidder fails to list a Subcontractor or lists more than one Subcontractor for the same portion of Work and the value of that Work is in excess of one-half of one percent of the total bid, the Bidder agrees that it shall be considered to have agreed to perform that portion of Work without the use of a Subcontractor and to have represented that the Bidder is qualified to perform the Work.

A Bidder who attempts to circumvent the requirements of this section by listing as a Subcontractor another contractor who, in turn, sublets the majority of the Work required under the Contract, violates this section.

If a Contract is awarded to a Bidder who violates this section, the Bidder agrees that the Contracting Officer may:

(1) cancel the Contract without any damages accruing to the State; or

(2) after notice and a hearing, assess a penalty on the Bidder in an amount that does not exceed 10 percent of the value of the Subcontract at issue.

A Bidder may replace a listed Subcontractor who:

(1) fails to comply with AS 08.18;

(2) files for bankruptcy or becomes insolvent;

(3) fails to execute a contract with the Bidder involving performance of the Work for which the Subcontractor was listed and the Bidder acted in good faith;

(4) fails to obtain bonding;

(5) fails to obtain insurance acceptable to the State;

(6) fails to perform the Contract with the Bidder involving Work for which the Subcontractor was listed;

(7) must be substituted in order for the prime CONTRACTOR to satisfy required State and Federal affirmative action requirements;

(8) refuses to agree or abide with the bidder's labor agreement; or

(9) is determined by the Contracting Officer to be non-responsive."

Modify subject area "AWARD OF CONTRACT" as follows:

Subparagraph (a) substitute the word "generally" for the phrase "as soon as practical and"

Subparagraph (b) delete and substitute the following:

"All Bidders will be notified of the DEPARTMENT's intent to Award the Contract and the successful Bidder will be requested to execute certain documents, including the Contract form and bonds."

STATE OF ALASKA
DEPARTMENT OF HEALTH & SOCIAL SERVICES

REQUIRED DOCUMENTS

State Funded Contracts

McLaughlin Youth Center Air Handling Unit Upgrades – ANC 15-04C

REQUIRED FOR BID. Bids will not be considered if the following documents are not completely filled out and submitted at the time of bidding:

1. **Bid Form (Form 06D-9)**
2. **Bid Schedule**
3. **Bid Bond (Form 06D-14)**
4. Any bid revisions must be submitted by the bidder prior to bid opening on the following form**:**

   Bid Modification (Form 06D-16)

REQUIRED AFTER NOTICE OF APPARENT LOW BIDDER. The apparent low bidder is required to complete and submit the following document within 5 working days after receipt of written notification:

1. **Subcontractor List (Form 06D-5)**

REQUIRED FOR AWARD. In order to be awarded the contract, the successful bidder must completely fill out and submit the following documents within the time specified in the intent to award letter:

1. **Contract (Form 06D-10A)**
2. **DD Form 214 or NGB Form 22 (if claiming Alaska Veterans Preference under AS 36.30.175(d))**
3. **Payment Bond (Form 06D-12)**
4. **Performance Bond (Form 06D-13)**
5. **Contractor's Questionnaire (Form 06D-8)**
6. **Contractor's Certification of Subcontractors (Form 05)**
7. **Certificate of Insurance** (from carrier)
8. D**ept. of Labor – Notice of Work Form –** *HSS/FMS Facilities will file the project with Labor first. Labor will then assign their file number for the project and email the information to both HSS FMS/Facilities and Contractor. Contractor will then file their information with Labor shortly thereafter.*

STATE OF ALASKA
DEPARTMENT OF HEALTH & SOCIAL SERVICES

ALASKA VETERAN'S PREFERENCE AFFIDAVIT

In response to the Invitation to Bid for:

McLaughlin Youth Center Air Handling Unit Upgrades – ANC 15-04C,

I certify under penalty of perjury that _____
(Name) qualifies for the Alaska Veteran's Preference under the following conditions:

(a) If a bidder qualifies under AS 36.30.170(b) as an Alaska bidder and is a qualifying entity, a five percent bid preference shall be applied to the bid price (preference may not exceed $5,000). In this subsection, "qualifying entity" means a:

(1) Sole proprietorship owned by an Alaska Veteran;
(2) Partnership under AS 32.06 or AS 32.11 if a majority of the members are Alaska Veteran's;
(3) Limited Liability Company organized under AS 10.50 if a majority of the individuals are Alaska Veterans.

(b) To qualify for a preference under this section, a bidder must add value by the bidder itself actually performing, controlling, managing and supervising a significant part of the services provided, or the bidder must have sold supplies of the general nature solicited to other state agencies, governments, or the general public.

(c) In this section, "Alaska Veteran" means an individual who is a:

(1) Resident of this state; and
(2) Veteran; means an individual who:

(A) Served in the:

(i) Armed Forces of the United States, including a reserve unit of the United States armed forces; or
(ii) Alaska Territorial Guard, the Alaska Army National Guard, the Alaska Air National Guard, or the Alaska Naval Militia; and

(B) Was separated from the service under a condition that was not dishonorable.

_____
Authorized Signature

_____ _____
Printed Name Date

STATE OF ALASKA
DEPARTMENT OF HEALTH & SOCIAL SERVICES

BID FORM

for

McLaughlin Youth Center Air Handling Unit Upgrades – ANC 15-04C

Project Name and Number

By

Company Name

Company Address (Street or PO Box, City, State, Zip)

To the CONTRACTING OFFICER,
DEPARTMENT OF HEALTH & SOCIAL SERVICES

In compliance with your Invitation for Bids dated_____, 2014, the Undersigned proposes to furnish and deliver all the materials and do all the work and labor required in the construction of the above-referenced Project, located at or near **Anchorage, Alaska**, according to the plans and specifications and for the amount and prices named herein as indicated on the Bid Schedule consisting of 1 sheet, which is made a part of this Bid.

The Undersigned declares that he has carefully examined the contract requirements and that he has made a personal examination of the site of the work; that he understands that the quantities, where such are specified in the Bid Schedule or on the plans for this project, are approximate only and subject to increase or decrease, and that he is willing to perform increased or decreased quantities of work at unit prices bid under the conditions set forth in the Contract Documents.

The Undersigned hereby agrees to execute the said contract and bonds within fifteen calendar days, or such further time as may be allowed in writing by the Contracting Officer, after receiving notification of the acceptance of this bid, and it is hereby mutually understood and agreed that in case the Undersigned does not, the accompanying bid guarantee shall be forfeited to the State of Alaska, Department of Health & Social Services as liquidated damages, and the said Contracting Officer may proceed to award the contract to others.

The Undersigned agrees to commence the work within 10 calendar days and to complete the work by **September 30, 2015**, unless extended in writing by the Contracting Officer.

The Undersigned proposes to furnish Payment Bond in the amount of **50%** and Performance Bond in the amount of **50%** (of the contract), as surety conditioned for the full, complete and faithful performance of this contract.

The Undersigned acknowledges receipt of the following addenda to the drawings and/or specifications (give number and date of each).

Addenda Number	Date Issued	Addenda Number	Date Issued	Addenda Number	Date Issued

NON-COLLUSION AFFIDAVIT

The Undersigned declares, under penalty of perjury under the laws of the United States, that neither he, nor the firm, association, or corporation of which he is a member, has, either directly or indirectly, entered into any agreement, participated in any collusion, or otherwise taken any action in restraint of free competitive bidding in connection with this bid.

The Undersigned has read the foregoing proposal and hereby agrees to the conditions stated therein by affixing his signature below:

_____
Signature of Authorized Company Representative

_____
Typed or Printed Name and Title

_____ _____
Phone Number **Fax Number**

_____
Email Address

STATE OF ALASKA
DEPARTMENT OF HEALTH & SOCIAL SERVICES

ALASKA PRODUCTS PREFERENCE WORKSHEET
SMALL PROCUREMENT CONTRACT
(CONSTRUCTION RELATED)

(See Instructions on back)

Project Name: McLaughlin Youth Center Air Handling Unit Upgrades

Project Number: ANC 15-04C

Procurement Agency: FMS Facilities Contractor: _____

PRODUCT	MANUFACTURER	CLASS & PREFERENCE PERCENTAGE	TOTAL DECLARED VALUE	REDUCTION AMOUNT
			TOTAL	

INSTRUCTIONS FOR ALASKA PRODUCTS PREFERENCE WORKSHEET

Special Notice: All procurements, except those funded from Federal sources, shall contain Contract provisions for the preference of Alaska products. To be considered for the Alaska Product Preference, each product listed by the Bidder on this worksheet must have current certification from the Alaska Products Preference Program at the time of Bid Opening. A product with expired certification at the bid opening date will not be considered eligible. Products that are not specified for use on the project will not be considered eligible. The Alaska Product Preference Program List of certified products is available online at: http://www.commerce.state.ak.us/ded/dev/prodpref/prodpref.htm or may be obtained by contacting the local DCED office or writing: Dept. of Commerce & Economic Development, Alaska Products Preference List, P.O. Box 110800, Juneau, Alaska 99811-0800.

BIDDERS INSTRUCTIONS:

A. General. The contracting Agency may request documentation to support entries made on this form. False presentations may be subject to AS 36.30.687. All Bidder's entries must conform to the requirements covering bid preparations in general. Discrepancies in price extensions shall be resolved by multiplying the declared total value times the preference percentage and adjusting any resulting computation(s) accordingly.

B. Form Completion – BASIC BIDS.

(1) Enter project number and name, the words "Basic Bid" and the CONTRACTOR'S name in the heading of each page as provided.

(2) The Bidder shall compare those candidate products appearing on the preference listing (see Special Notice comments above) against the requirements of the technical specifications appearing in the contract documents. If the Bidder determines that a candidate product can suitably meet the contract requirements, then that product may be included in the worksheet as follows.

(3) For each suitable product submitted under the "Basic Bid" enter:

- The product name, generic description and its corresponding technical specification section number under the heading "PRODUCT",
- The company name of the Alaska producer under the heading "Manufacturer", and
- The product class (I, II, or III) and preference percentage (3, 5, or 7% respectively) under the "CLASS/% heading.

(4) For each product appearing on the list and to be utilized by the CONTRACTOR enter:

- Under the heading "TOTAL DECLARED VALUE" the manufacturer's quoted price of the product, (caution: this value is to be the manufacturer's quoted price at the place of origin and shall not include costs for freight, handling or miscellaneous charges of incorporating the product into the Work,) and
- The resulting preference – i.e. the preference percentage times the total declared value amount – under the heading "REDUCTION AMOUNT".

(5) Continue for all "suitable" basic bid products. If the listing exceeds one page enter the words "Page # __ SUB" in front of the word "TOTAL" and on the first line of the following pages enter "SUBTOTAL OF REDUCTION AMOUNT FROM PREVIOUS PAGE".

(6) On the final page of the listing enter "BASIC BID PREFERENCE GRAND" immediately before the word "TOTAL".

(7) Total the entries in the "REDUCTION AMOUNT" column for each page by commencing at the first entry for that page. If a continuation page exists, ensure that the subtotal from the previous page is computed into the running total. Number pages as appropriate.

(8) Compute a Grand Total for the Basic Bid Preference. Enter the amount on the final page of the worksheet. (Note: When solicitations require written bids this amount should also be entered on line "C" of the Basic Bid Schedule.) Submit worksheet(s) with the Bid Schedule.

C. Form Completion – ALTERNATE BIDS.

(1) Enter project number and name, the words "ALTERNATE BID #__", and CONTRACTOR'S name in the heading of each page as provided.

(2) On the first entry line enter "ADDITIONAL ALASKA PRODUCTS FOR ALTERNATE BID #__", and repeat procedures 2 through 5 under part B these Bidder's instructions except that references to "Basic Bid" shall be replaced with the words "Alternate Bid #__."

(3) Following the listing of all additional Alaska products enter the words "ADDITIONAL PRODUCTS PREFERENCE FOR ALTERNATE BID #__ - SUBTOTAL" and enter a subtotal amount for all additional products as listed. Subtotal amount to be determined by adding all additional product entries in the "REDUCTION AMOUNT" column.

(4) Skip three lines and enter "LESS THE FOLLOWING NON-APPLICABLE ALASKA PRODUCTS:

(5) Beginning on the next line, enter the product name and manufacturer of each Alaska Product appearing on the "Basic Bid" listing which would be deleted or reduced from the Project should the "Alternate Bid" be selected. Details of entry need only be sufficient to clearly reference the subject product. (i.e. "Pre-hung doors by Alaska Door Co., Anchorage.") Products being reduced shall specify the amount of the reduction. Should no products require deletion enter "None". When a product is listed as a "NON-APPLICABLE ALASKA PRODUCT" for this alternate bid and if under the basic bid the Bidder received a preference on his basic bid as a result of that product, then the applicable entries under the headings "TOTAL DECLARED VALUE" and "REDUCTION AMOUNT" (for each product and from the basic bid listing) shall also be entered into the corresponding headings of this form. Where only a portion of the products has been deleted, the entry (which will differ from those on the basic bid listing) may be "pro-rated" or as otherwise substantiated.

(6) Following the listing of all non-applicable Alaska products enter the words "NON-APPLICABLE PRODUCTS PREFERENCE FROM BASIC BID ___ SUBTOTAL" and enter a subtotal amount for all non-applicable products listed. Subtotal amount to be determined by adding all non-applicable entries in the "REDUCTION AMOUNT" column.

(7) At the bottom of the final page enter the words "ALTERNATE BID #___ PREFERENCE GRAND" immediately before the word "TOTAL".

(8) Compute a Grand Total for the Alternate Bid Preference (for Alternate #___) by subtracting the non-applicable product preference subtotal from the additional product preference subtotal. Enter on the final page. (Note: When solicitations require written bids this amount should also be entered on line "C" of the Alternate Bid Schedule.) Submit separate worksheet(s) with each Alternate Bid.

BID SCHEDULE

Project: **McLaughlin Youth Center Air Handling Unit Upgrades, ANC 15-04C**

Bidders Please Note: Before preparing this bid schedule, read carefully, "Information to Bidders", 'Supplementary Information to Bidders", and the following:

The Bidder shall insert a fixed price in figures opposite each pay item that appears in the bid schedule to furnish all labor, material, equipment, supervision, and provide all work for each item listed. No price is to be entered or tendered for any item not appearing in the bid schedule. Conditioned or qualified bids will be considered non-responsive.

PAY ITEM	DESCRIPTION OF PAY ITEM	TOTAL BID PRICE, IN FIGURES
1. BASIC BID	All work described in the Specifications and Construction Documents for the **Project #ANC 15-04C MYC AHU Upgrades**	
a. Lump Sum Total Basic Bid		$_____
b. Additive Alternate #1		$_____
c. Additive Alternate #2		$_____
d. Additive Alternate #3		$_____
e. Alaska Bidders Preference (5% of Basic Bid)		$_____
f. Alaska Bidders Preference + Add Alt #1 (5% of Additive Alternate #1)		$_____
g. Alaska Bidders Preference + Add Alt #2 (5% of Additive Alternate #2)		$_____
h. Alaska Bidders Preference + Add Alt #3 (5% of Additive Alternate #3)		$_____
i. Alaska Veterans Preference (5% of Basic Bid - *May not exceed $5,000*)		$_____
j. Alaska Veterans Preference (5% of Basic Bid + Add. Alt #1 - *May not exceed $5,000*)		$_____
k. Alaska Veterans Preference (5% of Basic Bid + Add. Alt #1 + Add Alt #2 - *May not exceed $5,000*)		$_____
l. Alaska Veterans Preference (5% of Basic Bid + Add. Alt #1 + Add Alt #2 + Add Alt #3 (*May not exceed $5,000*)		$_____
m. Alaska Products Preference – Attach Worksheet		$_____
n. Adjusted Basic Bid (a – e –i – m)		$_____
o. Adjusted Basic Bid + Adjusted Add Alt #1 (a + b – f – j – m)		$_____
p. Adjusted Basic Bid + Adj. Add Alt #1 + Adj. Add Alt #2 (a + b + c – f – g – k – m)		$_____
q. Adjusted Basic Bid + Adj. Add Alt #1 + Adj. Add Alt #2 + Adj. Add Alt #3 (a + b + c + d – f – g – h – l – m)		$_____

_____
Contractor's Name (Printed)

_____ _____ _____ _____
Alaska Business License # Expires Alaska Contractor's Registration# Expires

STATE OF ALASKA
DEPARTMENT OF HEALTH & SOCIAL SERVICES

BID BOND

For

McLaughlin Youth Center Air Handling Unit Upgrades – ANC 15-04C

Project Name and Number

DATE BOND EXECUTED: _____

PRINCIPAL (Legal name and business address):	TYPE OF ORGANIZATION:
	[ ] Individual [ ] Partnership [ ] Joint Venture [ ] Corporation
	STATE OF INCORPORATION:

SURETY(IES) (Name and business address):

A.	**B.**	**C.**
PENAL SUM OF BOND:		DATE OF BID:

We, the PRINCIPAL and SURETY above named, are held and firmly bound to the State (State of Alaska), in the penal sum of the amount stated above, for the payment of which sum will be made, we bind ourselves and our legal representatives and successors, jointly and severally, by this instrument.

THE CONDITION OF THE FOREGOING OBLIGATION is that the Principal has submitted the accompanying bid in writing, date as shown above, on above-referenced Project in accordance with contract documents filed in the office of the Contracting Officer, and under the Invitation for Bids therefore, and is required to furnish a bond in the amount stated above.

If the Principal's bid is accepted and he is offered the proposed contract for award, and if the Principal fails to enter into the contract, then the obligation to the State created by this bond shall be in full force and effect.

If the Principal enters into the contract, then the foregoing obligation is null and void.

PRINCIPAL

Signature(s)	**1.**	**2.**	**3.**
Name(s) & Title(s) (Typed)	**1.**	**2.**	**3.**
			Corporate Seal

See Instructions on Reverse

CORPORATE SURETY(IES)

Surety A	Name of Corporation		State of Incorporation	Liability Limit **$**
Signature(s)	**1.**	**2.**		Corporate Seal
Name(s) & Titles (Typed)	**1.**	**2.**		

Surety B	Name of Corporation		State of Incorporation	Liability Limit **$**
Signature(s)	**1.**	**2.**		Corporate Seal
Name(s) & Titles (Typed)	**1.**	**2.**		

Surety C	Name of Corporation		State of Incorporation	Liability Limit **$**
Signature(s)	**1.**	**2.**		Corporate Seal
Name(s) & Titles (Typed)	**1.**	**2.**		

INSTRUCTIONS

1. This form shall be used whenever a bid bond is submitted.
2. Insert the full legal name and business address of the Principal in the space designated. If the Principal is a partnership or joint venture, the names of all principal parties must be included (e.g., "Smith Construction, Inc. and Jones Contracting, Inc. DBA Smith/Jones Builders, a joint venture"). If the Principal is a corporation, the name of the state in which incorporated shall be inserted in the space provided.
3. Insert the full legal name and business address of the Surety in the space designated. The Surety on the bond may be any corporation or partnership authorized to do business in Alaska as an insurer under AS 21.09. Individual sureties will not be accepted.
4. The penal amount of the bond may be shown either as an amount (in words and figures) or as a percent of the contract bid price (a not-to-exceed amount may be included).
5. The scheduled bid opening date shall be entered in the space marked Date of Bid.
6. The bond shall be executed by authorized representatives of the Principal and Surety. Corporations executing the bond shall also affix their corporate seal.
7. Any person signing in a representative capacity (e.g., an attorney-in-fact) must furnish evidence of authority if that representative is not a member of the firm, partnership, or joint venture, or an officer of the corporation involved.
8. The states of incorporation and the limits of liability of each surety shall be indicated in the spaces provided.
9. The date that bond is executed must not be later than the bid opening date.

STATE OF ALASKA
DEPARTMENT OF HEALTH AND SOCIAL SERVICES

BID MODIFICATION

McLaughlin Youth Center Air Handling Unit Upgrades – ANC 15-04C
Project Name and Number

Modification Number: _____

Note: All revisions shall be made to the unadjusted bid amount(s).
Changes to the adjusted bid amounts will be computed by the Department.

PAY ITEM NO.	PAY ITEM DESCRIPTION	REVISION TO UNIT BID PRICE +/-	REVISION TO BID AMOUNT +/-
		N/A	

TOTAL REVISION: $_____

_____
Name of Bidding Firm

_____
Responsible Party Signature **Date**

This form may be duplicated if additional pages are needed.

STATE OF ALASKA
DEPARTMENT OF HEALTH & SOCIAL SERVICES

SUBCONTRACTOR LIST

McLaughlin Youth Center Air Handling Unit Upgrades – ANC 15-04C
Project Name and Number

The apparent low bidder shall complete this form and submit it so as to be received by the Contracting Officer prior to the close of business on the fifth working day after receipt of written notice from the Department.

Failure to submit this form with all required information by the due date will result in the bidder being declared non-responsive and may result in the forfeiture of the Bid Security.

Scope of work must be clearly defined. If an item of work is to be performed by more than one firm, indicate the portion or percent of work to be done by each.

Check as applicable:

☐ All work on the below-referenced project will be accomplished without subcontracts greater than ½ of 1% of the contract amount.

OR

☐ Subcontractor List is as follows:

LIST FIRST TIER SUBCONTRACTORS ONLY

FIRM NAME, ADDRESS, & PHONE No.	AK BUSINESS LICENSE No. & CONTRACTOR'S REGISTRATION No.	SCOPE OF WORK TO BE PERFORMED

CONTINUE SUBCONTRACTOR INFORMATION ON REVERSE

For projects with federal-aid funding, I hereby certify Alaska Business Licenses and Contractor's registrations will be valid for all subcontractors prior to award of the subcontract. For projects without federal-aid funding (State funding only), I hereby certify the listed Alaska Business Licenses and Contractor's Registration were valid at the time bids were opened for this project.

Signature of Authorized Company Representative Title

Company Name Company Address (Street or PO Box, City, State, Zip)

Date Phone Number

FIRM NAME, ADDRESS, & PHONE No.	AK BUSINESS LICENSE No. & CONTRACTOR'S REGISTRATION No.	SCOPE OF WORK TO BE PERFORMED

STATE OF ALASKA
DEPARTMENT OF TRANSPORTATION AND PUBLIC FACILITIES
Civil Rights Office – DBE Program

BIDDER REGISTRATION

All firms must register annually or prior to project award with the Alaska Department of Transportation and Public Facilities (DOT&PF) Civil Rights Officer (CRO). Complete this form for each contractor and subcontractor. Firms will be listed on the bidder registration online directory http://www.dot.state.ak.us/cvlrts/bidreg.shtml.

Name of Firm: _____

Street Address: _____

Mailing Address: _____

Contact Name: _____

Telephone Number: _____

Fax number: _____

E-mail Address: _____

Date Firm was Established: _____

The firm listed above is a (check all that apply**):**

Prime Contractor?	☐	
Subcontractor?	☐	Identify specialty:
Service Provider?	☐	Identify service:
Material Supplier?	☐	Identify material:
Manufacturer?	☐	Identify product:
Certified DBE? *	☐	*DBE- Disadvantaged Business Enterprise

Firm's gross annual receipts:

☐ < $500,000

☐ $500,000- $999,999

☐ $1,000,000- $4,999,999

☐ $5,000,000- $9,999,999

☐ $10,000,000- $16,999,999

☐ > $17,000,000

Type of contracts/proposals bid by the firm (check all that apply):

☐ Highways ☐ Airports ☐ Transit ☐ AMHS

Signature of Company Representative	**Title**	**Date**

Send this completed form to:
ADOT&PF Civil Rights Office
PO Box 196900
Anchorage, Alaska 99519-6900

OR

You may fax your completed form to:
(907) 269-0847

If you have any questions, please call **(907) 269-0851**.

Form 25D-6 (3/2012)

STATE OF ALASKA
DEPARTMENT OF HEALTH & SOCIAL SERVICES

CONSTRUCTION CONTRACT

McLaughlin Youth Center Air Handling Unit Upgrades – ANC 15-04C

Project Name and Number

This CONTRACT, between the STATE OF ALASKA, DEPARTMENT OF HEALTH & SOCIAL SERVICES, herein called the Department, acting by and through its Contracting Officer, and

_____

Company Name

_____

Company Address (Street or PO Box, City, State, Zip)

a/an [ ] Individual [ ] Partnership [ ] Joint Venture [ ] Sole Proprietorship [ ] Corporation incorporated under the laws of the State of _____, its successors and assigns, herein called the Contractor, is effective the date of the signature of the Contracting Officer on this document.

WITNESSETH: That the Contractor, for and in consideration of the payment or payments herein specified and agreed to by the Department, hereby covenants and agrees to furnish and deliver all the materials and to do and perform all the work and labor required in the construction of the above-referenced project at the prices bid by the Contractor for the respective estimated quantities aggregating approximately the sum of

_____ Dollars

($ _____), and such other items as are mentioned in the original Bid, which Bid and prices named, together with the Contract Documents are made a part of this Contract and accepted as such.

It is distinctly understood and agreed that no claim for additional work or materials, done or furnished by the Contractor and not specifically herein provided for, will be allowed by the Department, nor shall the Contractor do any work or furnish any material not covered by this Contract, unless such work is ordered in writing by the Department. In no event shall the Department be liable for any materials furnished or used, or for any work or labor done, unless the materials, work, or labor are required by the Contract or on written order furnished by the Department. Any such work or materials which may be done or furnished by the Contractor without written order first being given shall be at the Contractor's own risk, cost, and expense and the Contractor hereby covenants and agrees to make no claim for compensation for work or materials done or furnished without such written order.

The Contractor further covenants and agrees that all materials shall be furnished and delivered and all labor shall be done and performed, in every respect, to the satisfaction of the Department, on or before: **September 30, 2015**. It is expressly understood and agreed that in case of the failure on the part of the Contractor, for any reason, except with the written consent of the Department, to complete the furnishing and delivery of materials and the doing and performance of the work before the aforesaid date, the Department shall have the right to deduct from any money due or which may become due the Contractor, or if no money shall be due, the Department shall have the right to recover **Three Hundred Twenty-five dollars ($325.00)** per day for each calendar day elapsing between the time stipulated for the completion and the actual date of completion in accordance with the terms hereof; such deduction to be made, or sum to be recovered, not as a penalty but as liquidated damages.

The bonds given by the Contractor in the sum of $_____ Payment Bond, and $_____ Performance Bond, to secure the proper compliance with the terms and provisions of this Contract, are submitted herewith and made a part hereof.

IN WITNESS WHEREOF, the parties hereto have executed this Contract and hereby agree to its terms and conditions.

CONTRACTOR

Company Name

Signature of Authorized Company Representative

Typed or Printed Name and Title

Date

(Corporate Seal)

STATE OF ALASKA
DEPARTMENT OF HEALTH & SOCIAL SERVICES

Signature of Contracting Officer

Typed or Printed Name

Date

STATE OF ALASKA
DEPARTMENT OF HEALTH & SOCIAL SERVICES

PERFORMANCE BOND

Bond No. _____

For

McLaughlin Youth Center Air Handling Unit Upgrades – ANC 15-04C

Project Name and Number

KNOW ALL WHO SHALL SEE THESE PRESENTS:

That _____

of _____ as Principal,

and _____

of _____ as Surety,

firmly bound and held unto the State of Alaska in the penal sum of

_____ Dollars

($_____) good and lawful money of the United States of America for the payment whereof,

well and truly to be paid to the State of Alaska, we bind ourselves, our heirs, successors, executors, administrators, and assigns, jointly and severally, firmly by these presents.

WHEREAS, the said Principal has entered into a written contract with said State of Alaska, on the _____ of _____ A.D., 20_____, for construction of the above-named project, said work to be done according to the terms of said contract.

Now, THEREFORE, the conditions of the foregoing obligation are such that if the said Principal shall well and truly perform and complete all obligations and work under said contract and if the Principal shall reimburse upon demand of the Department of Transportation and Public Facilities any sums paid him which exceed the final payment determined to be due upon completion of the project, then these presents shall become null and void; otherwise they shall remain in full force and effect.

IN WITNESS WHEREOF, we have hereunto set our hands and seals at _____, _____ this _____ day of _____ A.D., 20_____.

Principal: _____

Address: _____

By: _____

Contact Name: _____

Phone: ( ) _____

Surety: _____

Address: _____

By: _____

Contact Name: _____

Phone: ( ) _____

The offered bond has been checked for adequacy under the applicable statutes and regulations:

_____ _____

Alaska Department of Health & Social Services Authorized Representative **Date**

See Instructions on Reverse

INSTRUCTIONS

1. This form shall be used whenever a performance bond is required. There shall be no deviation from this form without approval from the Contracting Officer.

2. The full legal name, business address, phone number, and point of contact of the Principal and Surety shall be typed on the face of the form. Where more than a single surety is involved, a separate form shall be executed for each surety.

3. The penal amount of the bond, or in the case of more than one surety the amount of obligation, shall be typed in words and in figures.

4. Where individual sureties are involved, a completed Affidavit of Individual Surety shall accompany the bond. Such forms are available upon request from the Contracting Officer.

5. The bond shall be signed by authorized persons. Where such person is signing in a representative capacity (e.g., an attorney-in-fact), but is not a member of the firm, partnership, or joint venture, or an officer of the corporation involved, evidence of authority must be furnished.

STATE OF ALASKA
DEPARTMENT OF HEALTH & SOCIAL SERVICES

PAYMENT BOND

Bond No. _____

For

McLaughlin Youth Center Air Handling Unit Upgrades – ANC 15-04C

Project Name and Number

KNOW ALL WHO SHALL SEE THESE PRESENTS:

That _____

of _____ as Principal,

and _____

of _____ as Surety,

firmly bound and held unto the State of Alaska in the penal sum of

_____ Dollars

($_____) good and lawful money of the United States of America for the payment whereof,

well and truly to be paid to the State of Alaska, we bind ourselves, our heirs, successors, executors, administrators, and assigns, jointly and severally, firmly by these presents.

WHEREAS, the said Principal has entered into a written contract with said State of Alaska, on the _____ of _____ A.D., 20_____, for construction of the above-referenced project, said work to be done according to the terms of said contract.

Now, THEREFORE, the conditions of the foregoing obligation are such that if the said Principal shall comply with all requirements of law and pay, as they become due, all just claims for labor performed and materials and supplies furnished upon or for the work under said contract, whether said labor be performed and said materials and supplies be furnished under the original contract, any subcontract, or any and all duly authorized modifications thereto, then these presents shall become null and void; otherwise they shall remain in full force and effect.

IN WITNESS WHEREOF, we have hereunto set our hands and seals at _____, _____ this _____ day of _____ A.D., 20_____.

Principal: _____

Address: _____

By: _____

Contact Name: _____

Phone: ( ) _____

Surety: _____

Address: _____

By: _____

Contact Name: _____

Phone: ( ) _____

The offered bond has been checked for adequacy under the applicable statutes and regulations:

_____ _____

Alaska Department of Health & Social Services Authorized Representative **Date**

See Instructions on Reverse

INSTRUCTIONS

1. This form, for the protection of persons supplying labor and material, shall be used whenever a payment bond is required. There shall be no deviation from this form without approval from the Contracting Officer.

2. The full legal name, business address, phone number, and point of contact of the Principal and Surety shall be typed on the face of the form. Where more than a single surety is involved, a separate form shall be executed for each surety.

3. The penal amount of the bond, or in the case of more than one surety the amount of obligation, shall be typed in words and in figures.

4. Where individual sureties are involved, a completed Affidavit of Individual Surety shall accompany the bond. Such forms are available upon request from the Contracting Officer.

5. The bond shall be signed by authorized persons. Where such persons are signing in a representative capacity (e.g., an attorney-in-fact), but is not a member of the firm, partnership, or joint venture, or an officer of the corporation involved, evidence of authority must be furnished.

STATE OF ALASKA
DEPARTMENT OF HEALTH & SOCIAL SERVICES

CONTRACTOR'S QUESTIONNAIRE

McLaughlin Youth Center Air Handling Unit Upgrades – ANC 15-04C

Project Name and Number

A. FINANCIAL

1. Have you ever failed to complete a contract due to insufficient resources?
   [ ] No [ ] Yes If YES, explain:

_____
_____
_____
_____
_____

2. Describe any arrangements you have made to finance this work: _____

_____
_____

B. EQUIPMENT

1. Describe below the equipment you have available and intend to use for this project.

ITEM	QUAN.	MAKE	MODEL	SIZE/ CAPACITY	PRESENT MARKET VALUE

2. What percent of the total value of this contract do you intend to subcontract? _____ %

3. Do you propose to purchase any equipment for use on this project?
[ ] No [ ] Yes If YES, describe type, quantity, and approximate cost:

_____

_____

_____

4. Do you propose to rent any equipment for this work?
[ ] No [ ] Yes If YES, describe type and quantity:

_____

_____

_____

5. Is your bid based on firm offers for all materials necessary for this project?
[ ] Yes [ ] No If NO, please explain:

_____

_____

_____

C. EXPERIENCE

1. Have you had previous construction contracts or subcontracts with the State of Alaska?
[ ] Yes [ ] No

Describe the most recent or current contract, its completion date, and scope of work:

_____

_____

_____

_____

2. List, as an attachment to this questionnaire, other construction projects you have completed, the dates of completion, scope of work, and total contract amount for each project completed in the past 12 months.

I hereby certify that the above statements are true and complete.

Name of Contractor	**Name and Title of Person Signing**
Signature	**Date**

GENERAL CONDITIONS OF THE CONSTRUCTION CONTRACT FOR BUILDINGS

ACKNOWLEDGMENT

"The State of Alaska, General Conditions of the Construction Contract for Buildings" is based on the "Standard General Conditions of the Construction Contract" as published by the National Society of Professional Engineers (document number 1910-8, 1983 edition) on behalf of the Engineers Joint Construction Documents Committee. Portions of the NSPE General Conditions are reprinted herein by the express permission of NSPE. Modifications to the NSPE text are made to provide for State laws, regulations, and established procedures.

The granting of permission by NSPE to allow the State of Alaska to preprint portions of the NSPE document 1910-8, 1983 edition does not constitute approval of the State of Alaska General Conditions of the Construction Contract for Buildings.

ARTICLE I - DEFINITIONS

Wherever used in the Contract Documents the following terms, or pronouns in place of them, are used, the intent and meaning, unless a different intent or meaning is clearly indicated, shall be interpreted as set forth below.

The titles and headings of the articles, sections, and subsections herein are intended for convenience of reference.

Terms not defined below shall have their ordinary accepted meanings within the context which they are used. Words which have a well-known technical or trade meaning when used to describe work, materials or equipment shall be interpreted in accordance with such meaning. Words defined in Article I are to be interpreted as defined.

Addenda - All clarifications, corrections, or changes issued graphically or in writing by the DEPARTMENT after the Advertisement but prior to the opening of Proposals.

Advertisement - The public announcement, as required by law, inviting bids for Work to be performed or materials to be furnished.

Application for Payment - The form provided by the DEPARTMENT which is to be used by the CONTRACTOR in requesting progress or final payments and which is to include such supporting documentation as is required by the Contract Documents.

Approved or Approval - 'Approved' or 'Approval' as used in this contract document shall mean that the Department has received a document, form or submittal from the contractor and that the Department has taken "No exceptions" to the item submitted. Unless the context clearly indicates otherwise, approved or approval shall not mean that the Department approves of the methods or means, or that the item or form submitted meets the requirements of the contract or constitutes acceptance of the Contractor's work. Where approved or approval means acceptance, then such approval must be set forth in writing and signed by the contracting officer or his designee.

Architect - Where used in the contract documents, "ARCHITECT" shall mean the DEPARTMENT'S ENGINEER.

Architect/Engineer - Where used in the contract documents, "ARCHITECT/ENGINEER" shall mean the DEPARTMENT'S ENGINEER.

A.S - Initials which stand for Alaska Statute.

Award - The acceptance, by the DEPARTMENT, of the successful bid.

Bid Bond - A type of Proposal Guaranty.

Bidder - Any individual, firm, corporation or any acceptable combination thereof, or joint venture submitting a bid for the advertised Work.

Calendar Day - Every day shown on the calendar, beginning and ending at midnight.

Change Order - A written order by the DEPARTMENT directing changes to the Contract Documents, within their general scope.

Consultant - The person, firm, or corporation retained directly by the DEPARTMENT to prepare Contract Documents, perform construction administration services, or other Project related services.

Contingent Sum Work Item - When the bid schedule contains a Contingent Sum Work Item, the Work covered shall be performed only upon the written Directive of the Project Manager. Payment shall be made as provided in the Directive.

Contract - The written agreement between the DEPARTMENT and the CONTRACTOR setting forth the obligations of the parties and covering the Work to be performed, all as required by the Contract Documents.

Contract Documents - The Contract form, Addenda, the bidding requirements and CONTRACTOR's bid (including all appropriate bid tender forms), the bonds, the Conditions of the Contract and all other Contract requirements, the Specifications, and the Drawings furnished by the DEPARTMENT to the CONTRACTOR, together with all Change Orders and documents approved by the Contracting Officer, for inclusion, modifications and supplements issued on or after the Effective Date of the Contract.

Contracting Officer - The person authorized by the Commissioner to enter into and administer the Contract on behalf of the DEPARTMENT. He has authority to make findings, determinations and decisions with respect to the Contract and, when necessary, to modify or terminate the Contract. The Contracting Officer is identified on the construction Contract.

CONTRACTOR - The individual, firm, corporation or any acceptable combination thereof, contracting with the DEPARTMENT for performance of the Work

Contract Price - The total moneys payable by the DEPARTMENT to the CONTRACTOR under the terms of the Contract Documents.

Contract Time - The number of Calendar Days following issuance of Notice-to-Proceed in which the project shall be rendered Substantially Complete, or if specified as a calendar date, the Substantial Completion date specified in the Contract Documents

Controlling Item - Any feature of the Work on the critical path of a network schedule.

Defective - Work that is unsatisfactory, faulty or deficient, or does not conform to the Contract Documents.

DEPARTMENT - The Alaska Department of Transportation and Public Facilities. References to "Owner", "State", "Contracting Agency", mean the DEPARTMENT.

Directive - A written communication to the CONTRACTOR from the Contracting Officer interpreting or enforcing a Contract requirement or ordering commencement of an item of Work.

Drawings - The Drawings which show the character and scope of the Work to be performed and which have been furnished by the DEPARTMENT or the DEPARTMENT's Consultant and are by reference made a part of the Contract Documents.

ENGINEER - The DEPARTMENT'S authorized representative of the Contracting Officer, as defined in the DEPARTMENT'S *delegation of authority letter* to be issued after notice-to-proceed, who is responsible for administration of the contract.

Equipment - All machinery together with the necessary supplies for upkeep and maintenance, and also tools and apparatus necessary for the proper construction and acceptable completion of the work.

Final Acceptance - The DEPARTMENT's written acceptance of the Work following Final Completion and the performance of all Contract requirements by the CONTRACTOR.

Final Completion - The Project (or specified part thereof) has progressed to the point that all required Work is complete as determined by the Contracting Officer.

Furnish - To procure, transport, and deliver to the project site materials, labor, or equipment, for installation or use on the project.

General Requirements - Sections of Division 1 of the Specifications which contain administrative and procedural requirements as well as requirements for temporary facilities which apply to Specification Divisions 2 through 16.

Holidays - In the State of Alaska, Legal Holidays occur on:

1. New Years Day - January 1
2. Martin Luther King's Birthday - Third Monday in January
3. President's Day - Third Monday in February
4. Seward's Day - Last Monday in March
5. Memorial Day - Last Monday in May
6. Independence Day - July 4
7. Labor Day - First Monday in September
8. Alaska Day - October 18
9. Veteran's Day - November 11
10. Thanksgiving Day - Fourth Thursday in November
11. Christmas Day - December 25
12. Every Sunday
13. Every day designated by public proclamation by the President of the United States or the Governor of the State as a legal Holiday.

If any Holiday listed above falls on a Saturday, Saturday and the preceding Friday are both legal Holidays. If the Holiday should fall on a Sunday, except (12) above, Sunday and the following Monday are both legal Holidays. See Title 44, Alaska Statutes.

Inspector - The Engineer's authorized representative assigned to make detailed observations relating to contract performance.

Install - Means to build into the Work, ready to be used in complete and operable condition and in compliance with Contract Documents.

Interim Work Authorization - A written order by the Engineer initiating changes to the Contract, within its general scope, until a subsequent Change Order is executed.

Invitation for Bids - A portion of the bidding documents soliciting bids for the Work to be performed.

Laboratory - The official testing laboratories of the DEPARTMENT or such other laboratories as may be designated by the Engineer or identified in the contract documents.

Materials - Any substances specified for use in the construction of the project.

Notice of Intent to Award - The written notice by the DEPARTMENT to all Bidders identifying the apparent successful Bidder and establishing the DEPARTMENT's intent to execute the Contract when all conditions required for execution of the Contract are met.

Notice to Proceed - A written notice to the CONTRACTOR to begin the Work and establishing the date on which the Contract Time begins.

Payment Bond - The security furnished by the CONTRACTOR and his Surety to guarantee payment of the debts covered by the bond.

Performance Bond - The security furnished by the CONTRACTOR and his Surety to guarantee performance and completion of the Work in accordance with the Contract.

Preconstruction Conference - A meeting between the CONTRACTOR and the Engineer, and other parties affected by the construction, to discuss the project before the CONTRACTOR begins work.

Project - The total construction, of which the Work performed under the Contract Documents is the whole or a part, where such total construction may be performed by more than one CONTRACTOR.

Project Manager - The authorized representative of the Contracting Officer who is responsible for administration of the Contract.

Proposal - The offer of a Bidder, on the prescribed forms, to perform the Work at the prices quoted.

Proposal Guaranty - The security furnished with a Proposal to guarantee that the bidder will enter into a Contract if his Proposal is accepted by the DEPARTMENT.

Quality Assurance (QA) - Where referred to in the technical specifications (Divisions 2 through 16), Quality Assurance refers to measures to be provided by the CONTRACTOR as specified.

Quality Control (QC) - Tests and inspections by the CONTRACTOR to insure the acceptability of materials incorporated into the work. QC test reports are used as a basis upon which to determine whether the Work conforms to the requirements of the Contract Documents and to determine its acceptability for payment.

Regulatory Requirements - Laws, rules, regulations, ordinances, codes and/or orders.

Schedule of Values - The DEPARTMENT's document, submitted by the CONTRACTOR and reviewed by the Contracting Officer, which shall serve as the basis for computing payment and for establishing the value of separate items of Work which comprise the Contract Price.

Shop Drawings - All drawings, diagrams, illustrations, schedules and other data which are specifically prepared by or for the CONTRACTOR to illustrate some portion of the Work and all illustrations, brochures, standard schedules, performance charts, instructions, diagrams and other information prepared by a Supplier and submitted by the CONTRACTOR to illustrate material, equipment, fabrication, or erection for some portion of the Work. Where used in the Contract Documents, "Shop Drawings" shall also mean "Submittals".

Specifications - Those portions of the Contract Documents consisting of written technical descriptions of materials, equipment, construction systems, standards and workmanship as applied to the Work and certain administrative and procedural details applicable thereto.

Subcontractor - An individual, firm, or corporation to whom the CONTRACTOR or any other Subcontractor sublets part of the Contract.

Substantial Completion - Although not fully completed, the Work (or a specified part thereof) has progressed to the point where, in the opinion of the Contracting Officer, as evidence by the DEPARTMENT's written notice, it is sufficiently complete, in accordance with the Contract Documents, so that the Work (or specified part) can be utilized for the purposes for which it is intended. The terms"Substantially Complete" and "Substantially Completed" as applied to any Work refer to Substantial Completion thereof.

Supplemental Agreement - A written agreement between the CONTRACTOR and the DEPARTMENT covering work that is not within the general scope of the Contract.

Supplementary Conditions - The part of the Contract Documents which amends or supplements these General Conditions.

Supplier - A manufacturer, fabricator, distributor, materialman or vendor of materials or equipment.

Surety - The corporation, partnership, or individual, other than the CONTRACTOR, executing a bond furnished by the CONTRACTOR.

Traffic Control Plan (TCP) - A drawing of one or more specific plans that detail the routing of pedestrian, and/or vehicular traffic through or around a construction area.

Unit Price Work - Work to be paid for on the basis of unit prices.

Using Agency - The entitiy who will occupy or use the completed Project.

Utility - The privately, publicly or cooperatively owned lines, facilities and systems for producing, transmitting or distributing communications, power, electricity, light, heat, gas, oil, crude products, water, steam, waste, storm water not connected with highway or street drainage, and other similar commodities, including publicly owned fire and police signal systems, street lighting systems, and railroads which directly or indirectly serve the public or any part thereof. The term "utility" shall also mean the utility company, inclusive of any wholly owned or controlled subsidiary."

Work - Work is the act of, and the result of, performing services, furnishing labor, furnishing and incorporating materials and equipment into the Project and performing other duties and obligations, all as required by the Contract Documents. Such Work, however incremental, will culminate in the entire completed Project, or the various separately identifiable parts thereof.

ARTICLE 2 - AUTHORIZATION AND LIMITATIONS

2.1 Authorities and Limitations

2.1.1 The Contracting Officer alone, shall have the power to bind the DEPARTMENT and to exercise the rights, responsibilities, authorities and functions vested in the Contracting Officer by the Contract Documents. The Contracting Officer shall have the right to designate in writing authorized representatives to act for him. Wherever any provision of the Contract Documents specifies an individual or organization, whether governmental or private, to perform any act on behalf of or in the interest of the DEPARTMENT that individual or organization shall be deemed to be the Contracting Officer's authorized representative under this Contract but only to the extent so specified.

2.1.2 The CONTRACTOR shall perform the Work in accordance with any written order (including but not limited to instruction, direction, interpretation or determination) issued by an authorized representative in accordance with the authorized representative's authority to act for the Contracting Officer. The CONTRACTOR assumes all the risk and consequences of performing the Work in accordance with any order (including but not limited to instruction, direction, interpretation or determination) of anyone not authorized to issue such order, and of any order not in writing.

2.1.3 Should the Contracting Officer or his authorized representative designate Consultant(s) to act for the DEPARTMENT as provided for in Paragraph 2.1.1, the performance or nonperformance of the Consultant under such authority to act, shall not give rise to any contractual obligation or duty of the Consultant to the CONTRACTOR, any Subcontractor, any Supplier, or any other organization performing any of the Work or any Surety representing them.

2.2 Evaluations by Contracting Officer:

2.2.1 The Contracting Officer will decide all questions which may arise as to:

a. Quality and acceptability of materials furnished;

b. Quality and acceptability of Work performed;

c. Compliance with the schedule of progress;

d. Interpretation of Contract Documents;

e. Acceptable fulfillment of the Contract on the part of the CONTRACTOR.

2.2.2 In order to avoid cumbersome terms and confusing repetition of expressions in the Contract Documents the terms "as ordered", "as directed", "as required", "as approved" or terms of like effect or import are used, or the adjectives "reasonable", "suitable", "acceptable", "proper" or "satisfactory" or adjectives of like effect or import are used it shall be understood as if the expression were followed by the words "the Contracting Officer".

When such terms are used to describe a requirement, direction, review or judgment of the Contracting Officer as to the Work, it is intended that such requirement, direction, review or judgment will be solely to evaluate the Work for compliance with the Contract Documents (unless there is a specific statement indicating otherwise).

2.2.3 The use of any such term or adjective shall not be effective to assign to the DEPARTMENT any duty of authority to supervise or direct the furnishing or performance of the Work or any duty or authority to undertake responsibility contrary to the provisions of paragraphs 2.3 or 2.4.

2.3 Means & Methods:

The means, methods, techniques, sequences or procedures of construction, or safety precautions and the program incident thereto, and the failure to perform or furnish the Work in accordance with the Contract Documents are the sole responsibility of the CONTRACTOR.

2.4 Visits to Site/Place of Business:

The Contracting Officer will make visits to the site and approved remote storage sites at intervals appropriate to the various stages of construction to observe the progress and quality of the executed Work and to determine, in general, if the Work is proceeding in accordance with the Contract Documents. The Contracting Officer may, at reasonable times, inspect that part of the plant or place of business of the CONTRACTOR or Subcontractor that is related to the performance of the Contract. Such observations or the lack of such observations shall in no way relieve the CONTRACTOR from his duty to perform the Work in accordance with the Contract Documents.

ARTICLE 3 - CONTRACT DOCUMENTS: INTENT, AMENDING, REUSE

3.1 Incomplete Contract Documents:

The submission of a bid by the Bidder is considered a representation that the Bidder examined the Contract Documents to make certain that all sheets and pages were provided and that the Bidder is satisfied as to the conditions to be encountered in performing the Work. The DEPARTMENT expressly denies any responsibility or liability for a bid submitted on the basis of an incomplete set of Contract Documents.

3.2 Copies of Contract Documents:

The DEPARTMENT shall furnish to the CONTRACTOR up to ten copies of the Contract Documents. Additional copies will be furnished, upon request, at the cost of reproduction.

3.3 Scope of Work:

The Contract Documents comprise the entire Contract between the DEPARTMENT and the CONTRACTOR concerning the Work. The Contract Documents are complementary; what is called for by one is as binding as if called for by all. The Contract Documents will be construed in accordance with the Regulatory Requirements of the place of the Project.

It is specifically agreed between the parties executing this Contract that it is not intended by any of the provisions of the Contract to create in the public or any member thereof a third party benefit, or to authorize anyone not a party to this Contract to maintain a suit pursuant to the terms or provisions of the Contract.

3.4 Intent of Contract Documents:

3.4.1 It is the intent of the Contract Documents to describe a functionally complete Project to be constructed in accordance with the Contract Documents. Any Work, materials or equipment that may reasonably be inferred from the Contract Documents as being required to produce the intended result will be supplied, without any adjustment in Contract Price or Contract Time, whether or not specifically called for.

3.4.2 Reference to standard specifications, manuals or codes of any technical society, organization or association, or to the Regulatory Requirements of any governmental authority, whether such reference be specific or by implication, shall mean the edition stated in the Contract Documents or if not stated the latest standard specification, manual, code or Regulatory Requirements in effect at the time of Advertisement for the Project (or, on the Effective Date of the Contract if there was no Advertisement). However, no provision of any referenced standard specification, manual or code (whether or not specifically incorporated by reference in the Contract Documents) shall be effective to change the duties and responsibilities of the DEPARTMENT and the CONTRACTOR, or any of their consultants, agents or employees from those set forth in the Contract Documents, nor shall it be effective to assign to the DEPARTMENT or any of the DEPARTMENT's Consultants, agents or employees, any duty or authority to supervise or direct the furnishing or performance of the Work or any duty or authority to undertake responsibility contrary to the provisions of paragraphs 2.3 or 2.4.

3.5 Discrepancy in Contract Documents:

3.5.1 Before undertaking the Work, the CONTRACTOR shall carefully study and compare the Contract Documents and check and verify pertinent figures, and dimensions shown thereon and all applicable field measurements. Work in the area by the CONTRACTOR shall imply verification of figures, dimensions and field measurements. If, during the above study or during the performance of the Work, the CONTRACTOR finds a conflict, error, discrepancy or omission in the Contract Documents, or a discrepancy between the Contract Documents and any standard specification, manual, code, or Regulatory Requirement which affects the Work, the CONTRACTOR shall promptly report such discrepancy in writing to the Contracting Officer. The CONTRACTOR shall obtain a written interpretation or clarification from the Contracting Officer before proceeding with any Work affected thereby. Any adjustment made by the CONTRACTOR without this

determination shall be at his own risk and expense. However, the CONTRACTOR shall not be liable to the DEPARTMENT for failure to report any conflict, error or discrepancy in the Contract Documents unless the CONTRACTOR had actual knowledge thereof or should reasonably have known thereof.

3.5.2 Discrepancy - Order of Precedence:

When conflicts errors, or discrepancies within the Contract Documents exist, the order of precedence from most governing to least governing will be as follows:

Contents of Addenda
Supplementary Conditions
General Conditions
General Requirements
Technical Specifications
Drawings
Recorded dimensions will govern over scaled dimensions
Large scale details over small scale details
Schedules over plans
Architectural drawings over structural drawings Structural drawings over mechanical and electrical drawings

3.6 Clarifications and Interpretations:

The Contracting Officer will issue with reasonable promptness such written clarifications or interpretations of the requirements of the Contract Documents as the Contracting Officer may determine necessary, which shall be consistent with or reasonably inferable from the overall intent of the Contract Documents.

3.7 Reuse of Documents:

Neither the CONTRACTOR nor any Subcontractor, or Supplier or other person or organization performing or furnishing any of the Work under a direct or indirect contract with the DEPARTMENT shall have or acquire any title to or ownership rights in any of the Contract Documents (or copies thereof) prepared by or for the DEPARTMENT and they shall not reuse any of the Contract Documents on extensions of the Project or any other project without written consent of the Contracting Officer.

Contract Documents prepared by the CONTRACTOR in connection with the Work shall become the property of the DEPARTMENT.

ARTICLE 4 - LANDS AND PHYSICAL CONDITIONS

4.1 Availability of Lands:

The DEPARTMENT shall furnish as indicated in the Contract Documents, the lands upon which the Work is to be performed, rights-of-way and easements for access thereto, and such other lands which are designated for use of the CONTRACTOR in connection with the Work. Easements for permanent structures or permanent changes in existing facilities will be obtained and paid for by the DEPARTMENT, unless otherwise provided in the Contract Documents. The CONTRACTOR shall provide for all additional lands and access thereto that may be required for temporary construction facilities or storage of materials and equipment. The CONTRACTOR shall provide all waste and disposal areas, including disposal areas for hazardous or contaminated materials, at no additional cost to the DEPARTMENT.

4.2 Visit to Site:

The submission of a bid by the CONTRACTOR is considered a representation that the CONTRACTOR has visited and carefully examined the site and is satisfied as to the conditions to be encountered in performing the Work and as to the requirements of the Contract Documents.

4.3 Explorations and Reports:

Reference is made to the Supplementary Conditions for identification of those reports of explorations and tests of subsurface conditions at the site that have been utilized by the DEPARTMENT in preparation of the Contract Documents. The CONTRACTOR may for his purposes rely upon the accuracy of the factual data contained in such reports, but not upon interpretations or opinions drawn from such factual data contained therein or for the completeness or sufficiency thereof. Except as indicated in the immediately preceding sentence and in paragraphs 4.4 and 9.9, CONTRACTOR shall have full responsibility with respect to surface and subsurface conditions at the site.

4.4 Utilities:

The horizontal and vertical locations of known underground utilities as shown or indicated by the Contract Documents are approximate and are based on information and data furnished to the DEPARTMENT by the owners of such underground utilities.

4.4.2 The CONTRACTOR shall have full responsibility for:

a. Reviewing and checking all information and data concerning utilities.

b. Locating all underground utilities shown or indicated in the Contract Documents which are affected by the Work.

c. Coordination of the Work with the owners of all utilities during construction.

d. Safety and protection of all utilities as provided in paragraph 6.17.

e. Repair of any damage to utilities resulting from the Work in accordance with 4.4.4 and 4.5.

4.4.3 If Work is to be performed by any utility owner, the CONTRACTOR shall cooperate with such owners to facilitate the Work.

4.4.4 In the event of interruption to any utility service as a result of accidental breakage or as result of being exposed or unsupported, the CONTRACTOR shall promptly notify the utility owner and the Contracting Officer. If service is interrupted, repair work shall be continuous until the service is restored. No Work shall be undertaken around fire hydrants until provisions for continued service has been approved by the local fire

authority.

4.5 Damaged Utilities:

When utilities are damaged by the CONTRACTOR, the utility owner shall have the choice of repairing the utility or having the CONTRACTOR repair the utility. In the following circumstances, the CONTRACTOR shall reimburse the utility owner for repair costs or provide at no cost to the utility owner or the DEPARTMENT, all materials, equipment and labor necessary to complete repair of the damage:

a. When the utility is shown or indicated in the Contract Documents.

b. When the utility has been located by the utility owner.

c. When no locate was requested by the CONTRACTOR for utilities shown or indicated in the Contract Documents.

d. All visible utilities.

e. When the CONTRACTOR could have, otherwise, reasonably been expected to be aware of such utility.

4.6 Utilities Not Shown or Indicated:

If, while directly performing the Work, an underground utility is uncovered or revealed at the site which was not shown or indicated in the Contract Documents and which the CONTRACTOR could not reasonably have been expected to be aware of, the CONTRACTOR shall, promptly after becoming aware thereof and before performing any Work affected thereby (except in an emergency as permitted by paragraph 6.19) identify the owner of such underground utility and give written notice thereof to that owner and to the Contracting Officer. The Contracting Officer will promptly review the underground utility to determine the extent to which the Contract Documents and the Work should be modified to reflect the impacts of the discovered utility. The Contract Documents will be amended or supplemented in accordance with paragraph 9.2 and to the extent necessary through the issuance of a change document by the Contracting Officer. During such time, the CONTRACTOR shall be responsible for the safety and protection of such underground utility as provided in paragraph 6.17. The CONTRACTOR may be allowed an increase in the Contract Price or an extension of the Contract Time, or both, to the extent that they are directly attributable to the existence of any underground utility that was not shown or indicated in the Contract Documents and which the CONTRACTOR could not reasonably have been expected to be aware of.

4.7 Survey Control:

The DEPARTMENT will identify sufficient horizontal and vertical control data to enable the CONTRACTOR to survey and layout the Work. All survey work shall be performed under the direct supervision of a registered land surveyor when required by paragraph 7.8. Copies of all survey notes shall be provided to the DEPARTMENT at an interval determined by the Project Manager. The Project Manager may request submission on a weekly or longer period at his discretion. Any variations between the Contract Documents and actual field conditions shall be identified in the survey notes.

ARTICLE 5 - BONDS, INSURANCE, AND INDEMNIFICATION

5.1 Delivery of Bonds:

When the CONTRACTOR delivers the executed Contract to the Contracting Officer, the CONTRACTOR shall also deliver to the Contracting Officer such bonds as the CONTRACTOR may be required to furnish in accordance with paragraph 5.2.

5.2 Bonds:

The CONTRACTOR shall furnish Performance and Payment Bonds, each in an amount as shown on the Contract as security for the faithful performance and payment of all CONTRACTOR's obligations under the Contract Documents. These bonds shall remain in effect for one year after the date of Final Acceptance and until all obligations under this Contract, except special guarantees as per 12.7, have been met. All bonds shall be furnished on forms provided by the DEPARTMENT (or copies thereof) and shall be executed by such Sureties as are authorized to do business in the State of Alaska. The Contracting Officer may at his option copy the Surety with notice of any potential default or liability.

5.3 Replacement of Bond and Surety:

If the Surety on any bond furnished in connection with this Contract is declared bankrupt or becomes insolvent or its right to do business is terminated in any state where any part of the Project is located or it ceases to meet the requirements of paragraph 5.2, or otherwise becomes unacceptable to the DEPARTMENT, or if any such Surety fails to furnish reports as to his financial condition as requested by the DEPARTMENT, the CONTRACTOR shall within five days thereafter substitute another bond and Surety, both of which must be acceptable to DEPARTMENT.

An individual Surety may be replaced by a corporate Surety during the course of the Contract period. If the Surety desires to dispose of the collateral posted, the DEPARTMENT may, at its option, accept substitute collateral.

5.4 Insurance Requirements:

5.4.1 The CONTRACTOR shall provide evidence of insurance with a carrier or carriers satisfactory to the DEPARTMENT covering injury to persons and/or property suffered by the State of Alaska or a third party, as a result of operations which arise both out of and during the course of this Contract by the CONTRACTOR or by any Subcontractor. This coverage will also provide protection against injuries to all employees of the CONTRACTOR and the employees of any Subcontractor engaged in Work under this Contract. The delivery to the DEPARTMENT of a written 30 day notice is required before cancellation of any coverage or reduction in any limits of liability. Insurance carriers shall have an acceptable financial rating.

5.4.2 The CONTRACTOR shall maintain in force at all times during the performance of the work under this agreement the following policies and minimum limits of liability. Failure to maintain insurance may, at the option of the Contracting Officer, be deemed Defective Work and remedied in accordance with the Contract. Where specific limits and coverages are shown, it is understood that they shall be the minimum acceptable. The requirements of this paragraph shall not limit the CONTRACTOR's responsibility to indemnify under paragraph 5.5. Additional insurance requirements specific to this Contract are contained in the Supplementary Conditions, when applicable.

a. Workers' Compensation Insurance: The Contractor shall provide and maintain, for all employees of the Contractor engaged in work under this contract, Workers' Compensation Insurance as required by AS 23.30.045. The Contractor shall be responsible for Workers' Compensation Insurance for any subcontractor who provides services under this contract, to include:

1. Waiver of subrogation against the State and Employer's Liability Protection in the amount of $500,000 each accident/$500,000 each disease.

2. If the Contractor directly utilizes labor outside of the State of Alaska in the prosecution of the work, "Other States" endorsement shall be required as a condition of the contract.

3. Whenever the work involves activity on or about navigable waters, the Workers' Compensation policy shall contain a United States Longshoreman's and Harbor Worker's Act endorsement, and when appropriate, a Maritime Employer's Liability (Jones Act) endorsement with a minimum limit of $1,000,000.

b. Comprehensive or Commercial General Liability Insurance: Such insurance shall cover all operations by or on behalf of the CONTRACTOR and provide insurance for bodily injury and property damage liability including coverage for:

premises and operations; products and completed operations; contractual liability insuring obligations assumed under paragraph 5.5, Indemnification; broad form property damage; and personal injury liability.

The minimum limits of liability shall be:

1. If the CONTRACTOR carries a *Comprehensive General Liability* policy, the limits of liability shall not be less than a Combined Single Limit for bodily injury, property damage and Personal Injury Liability of:

   $1,000,000 each occurrence
   $2,000,00 aggregate

2. If the CONTRATOR carries a *Commercial General Liability* policy, the limits of liability shall not be less than:

   $1,000,000 each occurrence (Combined Single Limit for bodily injury and property damage)
   $1,000,000 for Personal Injury Liability

   $2,000,000 aggregate for Products-Completed Operations
   $2,000,000 general aggregate

   The State of Alaska, DEPARTMENT of Transportation and Public Facilities shall be named as an "Additional Insured" under all liability coverages listed above.

c. Automobile Liability Insurance:
Such insurance shall cover all owned, hired and non-owned vehicles and provide coverage not less than that of the Business Automobile Policy in limits not less than the following:

$1,000,000 each occurrence
(Combined Single Limit for bodily injury and property damage.)

d. Builder's Risk Insurance:
Coverage shall be on an "All Risk" completed value basis including "quake and flood" and protect the interests of the DEPARTMENT, the CONTRACTOR and his Subcontractors. Coverage shall include all materials, supplies and equipment that are intended for specific installation in the Project while such materials, supplies and equipment are located at the Project site, in transit from port of arrival to job site and while temporarily located away from the Project site.

In addition to providing the above coverages the CONTRACTOR shall ensure that Subcontractors provide insurance coverages as noted in clauses a., b., and c. of this subparagraph. Builders Risk Insurance will only be required of subcontractors if so stated in the Supplementary Conditions.

e. Other Coverages:
As specified in the Supplementary Conditions.

5.4.3 In addition to providing the above coverages the Contractor shall, in any contract or agreement with subcontractors performing work, require that all indemnities and waivers of subrogation it obtains, and that any stipulation to be named as an additional insured it obtains, also be extended to waive rights of subrogation against the State of Alaska and to add the State of Alaska as additional named indemnitee and as additional insured.

Evidence of insurance shall be furnished to the Department prior to the award of the contract. Such evidence, executed by the carrier's representative and issued to the Department, shall consist of a certificate of insurance or the policy declaration page with required endorsements attached thereto which denote the type, amount, class of operations covered, effective (and retroactive) dates, and dates of expiration. Acceptance by the Department of deficient evidence does not constitute a waiver of contract requirements.

When a certificate of insurance is furnished, it shall contain the following statement:

"This is to certify that the policies described herein comply with all aspects of the insurance requirements of (Project Name and Number)"

5.5 Indemnification:

The CONTRACTOR shall indemnify, save harmless, and defend the DEPARTMENT, its agents and its employees from any and all claims, actions, or liabilities for injuries or damages sustained by any person or property arising directly or indirectly from the construction or the CONTRACTOR's performance of this Contract; however, this provision has no effect if, but only if, the sole proximate cause of the injury or damage is the DEPARTMENT's negligence.

ARTICLE 6 - CONTRACTOR'S RESPONSIBILITIES

6.1 Supervision of Work:

The CONTRACTOR shall supervise and direct the Work competently and efficiently, devoting such attention thereto and applying such skills and expertise as may be necessary to perform the Work in accordance with the Contract Documents. All Work under this Contract shall be performed in a skillful and workmanlike manner. The CONTRACTOR shall be solely responsible for the means, methods, techniques, sequences and procedures of construction.

6.2 Superintendence by CONTRACTOR:

The CONTRACTOR shall keep on the Work at all times during its progress a competent resident superintendent. The Contracting Officer shall be advised in writing of the superintendent's name, local address, and telephone number. This written advice is to be kept current until Final Acceptance by the DEPARTMENT. The superintendent will be the CONTRACTOR's representative at the site and shall have full authority to act and sign documents on behalf of the CONTRACTOR.

All communications given to the superintendent shall be as binding as if given to the CONTRACTOR. The CONTRACTOR shall cooperate with the Contracting Officer in every way possible.

6.3 Character of Workers:

The CONTRACTOR shall provide a sufficient number of competent, suitably qualified personnel to survey and lay out the Work and perform construction as required by the Contract Documents. The CONTRACTOR shall at all times maintain good discipline and order at the site. The Contracting Officer may, in writing, require the CONTRACTOR to remove from the Work any employee the Contracting Officer deems incompetent, careless, or otherwise detrimental to the progress of the Work, but the Contracting Officer shall have no duty to exercise this right.

6.4 CONTRACTOR to Furnish:

Unless otherwise specified in the General Requirements, the CONTRACTOR shall furnish and assume full responsibility for all materials, equipment and machinery, tools, appliances, fuel, power, light, heat, telephone, water, sanitary facilities, temporary facilities and all other facilities and incidentals necessary for the furnishing, performance testing, start-up and completion of the Work.

6.5 Materials and Equipment:

All materials and equipment shall be of specified quality and new, except as otherwise provided in the Contract Documents. If required by the Contracting Officer, the CONTRACTOR shall furnish satisfactory evidence (including reports of required tests) as to the kind and quality of materials and equipment. All materials and equipment shall be applied, installed, connected, erected, used, cleaned, and conditioned in accordance with the instructions of the applicable Supplier except as otherwise provided in the Contract Documents; but no provision of any such instructions will be effective to assign to the DEPARTMENT or any of the DEPARTMENT's Consultants, agents or employees, any duty or authority to supervise or direct the furnishing or performance of the Work or any duty or authority to undertake responsibility contrary to the provisions of paragraphs 2.3 or 2.4.

6.6 Anticipated Schedules:

6.6.1 Within fourteen (14) calendar days after the date of the Notice to Proceed, the CONTRACTOR shall submit to the Contracting Officer for review an anticipated progress schedule indicating the starting and completion dates of the various stages of the Work. No individual stage of work shall exceed fourteen (14) calendar days.

6.6.2 Within twenty one (21) days after the date of the Notice to Proceed, the CONTRACTOR shall submit to the Contracting Officer for review an anticipated schedule of Shop Drawing submissions

6.6.3 Prior to submitting the CONTRACTOR's first Application for Payment, the CONTRACTOR shall submit for review and approval:

Anticipated Schedule of Values for all of the Work which will include quantities and prices of items aggregating the Contract Price and will subdivide the Work into component parts in sufficient detail to serve as the basis for progress payments during construction. Such prices will include an appropriate amount of overhead and profit applicable to each item of Work which will be confirmed in writing by the CONTRACTOR at the time of submission.

6.7 Finalizing Schedules:

Prior to processing the first Application for Payment the Contracting Officer and the CONTRACTOR will finalize schedules required by paragraph 6.6. The finalized progress schedule will be acceptable to the DEPARTMENT as providing information related to the orderly progression of the Work to completion within the Contract Time; but such acceptance will neither impose on the DEPARTMENT nor relieve the CONTRACTOR from full responsibility for the progress or scheduling of the Work. If accepted, the finalized schedule of Shop Drawing and other required submissions will be acknowledgment by the DEPARTMENT as providing a workable arrangement for processing the submissions. If accepted, the finalized Schedule of Values will be acknowledgment by the DEPARTMENT as an approximation of anticipated value of Work accomplished over the anticipated Contract Time. Receipt and acceptance of a schedule submitted by the CONTRACTOR shall not be construed to assign responsibility for performance or contingencies to the DEPARTMENT or relieve the CONTRACTOR of his responsibility to adjust his forces, equipment, and work schedules as may be necessary to insure completion of the Work within prescribed Contract Time. Should the prosecution of the Work be discontinued for any reason, the CONTRACTOR shall notify the Contracting Officer at least 24 hours in advance of resuming operations.

6.8 Adjusting Schedules:

Upon substantial changes to the schedule or upon request the CONTRACTOR shall submit to the Contracting Officer for acceptance (to the extent indicated in paragraph 6.7 and the General Requirements) adjustments in the schedules to reflect the actual present and anticipated progress of the Work.

6.9 Substitutes or "Or-Equal" Items:

6.9.1 Whenever materials or equipment are specified or described in the Contract Documents by using the name of a proprietary item or the name of a particular Supplier the naming of the item is intended to establish the type, function and quality required. Unless the name is followed by words indicating that substitution is limited or not permitted, materials or equipment of other Suppliers may be accepted by the Contracting Officer only if sufficient information is submitted by the CONTRACTOR which clearly demonstrates to the Contracting Officer that the material or equipment proposed is equivalent or equal in all aspects to that named. The procedure for review by the Contracting Officer will include the following as supplemented in the General Requirements.

6.9.2 Requests for review of substitute items of material and equipment will not be accepted by the Contracting Officer from anyone other than the CONTRACTOR.

6.9.3 If the CONTRACTOR wishes to furnish or use a substitute item of material or equipment, the CONTRACTOR shall make written application to the Contracting Officer for Approval thereof, certifying that the proposed substitute will perform adequately the functions and achieve the results called for by the general design, be similar and of equal substance to that specified and be suited to the same use as the specified. The application will state that the evaluation and Approval of the proposed substitute will not delay the CONTRACTOR's timely achievement of Substantial or Final Completion, whether or not acceptance of the substitute for use in the Work will require a change in any of the Contract Documents (or in the provisions of any other direct contract with the DEPARTMENT for Work on the Project) to adapt the design to the proposed substitute and whether or not incorporation or use of the substitute in connection with the Work is subject to payment of any license fee or royalty.

6.9.4 All variations of the proposed substitute from that specified will be identified in the application and available maintenance, repair and replacement service will be indicated. The application will also contain an itemized estimate of all costs that will result directly or indirectly from acceptance of such substitute, including costs of redesign and claims of other contractors affected by the resulting change, all of which shall be considered by the DEPARTMENT in evaluating the proposed substitute. The DEPARTMENT may require the CONTRACTOR to furnish at the CONTRACTOR's expense additional data about the proposed substitute. The Contracting Officer may reject any substitution request which the Contracting Officer determines is not in the best interest of the DEPARTMENT.

6.9.5 Substitutions shall be permitted during or after the bid period as allowed and in accordance with Document 00020 - Invitation for Bids, Document 00700 – General Conditions, and Document 01630 - Product Options and Substitutions.

6.10 Substitute Means and Methods:

If a specific means, method, technique, sequence or procedure of construction is indicated in or required by the Contract Documents, the CONTRACTOR may furnish or utilize a substitute means, method, sequence, technique or procedure of construction acceptable to the Contracting Officer, if the CONTRACTOR submits sufficient information to allow the Contracting Officer to determine that the substitute proposed is equivalent to that indicated or required by the Contract Documents. The procedure for review by the Contracting Officer will be similar to that provided in paragraph 6.9 as applied by the Contracting Officer and as may be supplemented in the General Requirements.

6.11 Evaluation of Substitution:

The Contracting Officer will be allowed a reasonable time within which to evaluate each proposed substitute. The Contracting Officer will be the sole judge of acceptability, and no substitute will be ordered, installed or utilized without the Contracting Officer's prior written Approval which will be evidenced by either a Change Order or a Shop Drawing Approved in accordance with Sections 6.20 and 6.21. The Contracting Officer may require the CONTRACTOR to furnish at the CONTRACTOR's expense a special performance guarantee or other Surety with respect to any substitute.

6.12 Dividing the Work:

The divisions and sections of the Specifications and the identifications of any Drawings shall not control the CONTRACTOR in dividing the Work among Subcontractors or Suppliers or delineating the Work to be performed by any specific trade.

6.13 Subcontractors:

The CONTRACTOR may utilize the services of appropriately licensed Subcontractors on those parts of the Work which, under normal contracting practices, are performed by Subcontractors, in accordance with the following conditions:

6.13.1 The CONTRACTOR shall not award any Work to any Subcontractor without prior written Approval of the Contracting Officer. This Approval will not be given until the CONTRACTOR submits to the Contracting Officer a written statement concerning the proposed award to the Subcontractor which shall contain required Equal Employment Opportunity documents, evidence of insurance whose limits are acceptable to the CONTRACTOR, and an executed copy of the subcontract. All subcontracts shall contain provisions for prompt payment, release of retainage, and interest on late payment amounts and retainage as specified in A.S. 36.90.210. Contracts between subcontractors, regardless of tier, must also contain these provisions. No acceptance by the Contracting Officer of any such Subcontractor shall constitute a waiver of any right of the DEPARTMENT to reject Defective Work.

6.13.2 The CONTRACTOR shall be fully responsible to the DEPARTMENT for all acts and omisions of the Subcontractors, Suppliers and other persons and organizations performing or furnishing any of the Work under a direct or indirect contract with CONTRACTOR just as CONTRACTOR is responsible for CONTRACTOR's own acts and omissions.

6.13.3 All Work performed for CONTRACTOR by a Subcontractor will be pursuant to an appropriate written agreement between CONTRACTOR and the Subcontractor which specifically binds the Subcontractor to the applicable terms and conditions of the Contract Documents for the benefit of the DEPARTMENT and contains waiver provisions as required by paragraph 13.17 and termination provisions as required by Article 14.

6.13.4 Nothing in the Contract Documents shall create any contractual relationship between the DEPARTMENT and any such Subcontractor, Supplier or other person or organization, nor shall it create any obligation on the part of the DEPARTMENT to pay or to see to the payment of any moneys due any such Subcontractor, Supplier or other person or organization except as may otherwise be required by Regulatory Requirements. The DEPARTMENT will not undertake to settle any differences between or among the CONTRACTOR, Subcontractors, or Suppliers.

6.13.5 The CONTRACTOR and Subcontractors shall coordinate their work and cooperate with other trades so to facilitate general progress of Work. Each trade shall afford other trades every reasonable opportunity for installation of their work and storage of materials. If cooperative work of one trade must be altered due to lack of proper supervision, or failure to make proper provisions in time by another trade, such conditions shall be remedied by the CONTRACTOR with no change in Contract Price or Contract Time.

6.13.6 The CONTRACTOR shall include on his own payrolls any person or persons working on this Contract who are not covered by written subcontract, and shall ensure that all Subcontractors include on their payrolls all persons performing Work under the direction of the Subcontractor.

6.14 Use of Premises:

The CONTRACTOR shall confine construction equipment, the storage of materials and equipment and the operations of workers to the Project limits and approved remote storage sites and lands and areas identified in and permitted by Regulatory Requirements, rights-of-way, permits and easements, and shall not unreasonably encumber the premises with construction equipment or other materials or equipment. The CONTRACTOR shall assume full responsibility for any damage to any such land or area, or to the owner or occupant thereof or of any land or areas contiguous thereto, resulting from the performance of the Work. Should any claim be made against the DEPARTMENT by any such owner or occupant because of the performance of the Work, the CONTRACTOR shall hold the DEPARTMENT harmless.

6.15 Structural Loading:

The CONTRACTOR shall not load nor permit any part of any structure to be loaded in any manner that will endanger the structure, nor shall the CONTRACTOR subject any part of the Work or adjacent property to stresses or pressures that will endanger it.

6.16 Record Documents:

The CONTRACTOR shall maintain in a safe place at the site one record copy of all Drawings, Specifications, Addenda, Directives, Change Orders, Supplemental Agreements, and written interpretations and clarifications (issued pursuant to paragraph 3.6) in good order and annotated to show all changes made during construction. These record documents together with all Approved samples and a counterpart of all Approved Shop Drawings will be available to the Contracting Officer for reference and copying. Upon completion of the Work, the annotated record documents, samples and Shop Drawings will be delivered to the Contracting Officer. Record documents shall accurately record variations in the Work which vary from requirements shown or indicated in the Contract Documents.

6.17 Safety and Protection:

The CONTRACTOR alone shall be responsible for initiating, maintaining and supervising all safety precautions and programs in connection with the Work. The CONTRACTOR shall take all necessary precautions for the safety of, and shall provide the necessary protection to prevent damage, injury or loss to:

6.17.1 All employees on the Work and other persons and organizations who may be affected thereby;

6.17.2 All the Work and materials and equipment to be incorporated therein, whether in storage on or off the site; and

6.17.3 Other property at the site or adjacent thereto, including trees, shrubs, lawns, walks, pavements, roadways, structures, and utilities not designated for removal, relocation or replacement in the course of construction.

The CONTRACTOR shall comply with all applicable Regulatory Requirements of any public body having jurisdiction for the safety of persons or property or to protect them from damage, injury or loss; and shall erect and maintain all necessary safeguards for such safety and protection. The CONTRACTOR shall notify owners of adjacent property and utility owners when prosecution of the Work may affect them, and shall cooperate with them in the protection, removal, relocation and replacement of their property. All damage, injury or loss to any property caused, directly or indirectly, in whole or in part, by the CONTRACTOR, any Subcontractor, Supplier or any other person or organization directly or indirectly employed by any of them to perform or furnish any of the Work or anyone for whose acts any of them may be liable, shall be remedied by the CONTRACTOR with no change in Contract Price or Contract Time except as stated in 4.6, except damage or loss attributable to unforeseeable causes beyond the control of and without the fault or negligence of the CONTRACTOR, including but not restricted to acts of God, of the public enemy or governmental authorities. The CONTRACTOR's duties and responsibilities for the safety and protection of the Work shall continue until Final Acceptance (except as otherwise expressly provided in connection with Substantial Completion).

6.18 Safety Representative:

The CONTRACTOR shall designate a responsible safety representative at the site. This person shall be the CONTRACTOR's superintendent unless otherwise designated in writing by the CONTRACTOR to the Contracting Officer.

6.19 Emergencies:

In emergencies affecting the safety or protection of persons or the Work or property at the site or adjacent thereto, the CONTRACTOR, without special instruction or authorization from the DEPARTMENT, is obligated to act to prevent threatened damage, injury or loss. The CONTRACTOR shall give the Contracting Officer prompt written notice if the CONTRACTOR believes that any significant changes in the Work or variations from the Contract Documents have been caused thereby. If the DEPARTMENT determines that a change in the Contract Documents is required because of the action taken in response to an emergency, a change will be authorized by one of the methods indicated in Paragraph 9.2, as determined appropriate by the Contracting Officer.

6.20 Shop Drawings and Samples:

6.20.1 After checking and verifying all field measurements and after complying with applicable procedures specified in the General Requirements, the CONTRACTOR shall submit to the Contracting Officer for review and Approval in accordance with the accepted schedule of Shop Drawing submissions the required number of all Shop Drawings, which will bear a stamp or specific written indication that the CONTRACTOR has satisfied CONTRACTOR's responsibilities under the Contract Documents with respect to the review of the submission. All submissions will be identified as the Contracting Officer may require. The data shown on the Shop Drawings will be complete with respect to quantities, dimensions, specified performance and design criteria, materials and similar data to enable the Contracting Officer to review the information as required.

6.20.2 The CONTRACTOR shall also submit to the Contracting Officer for review and Approval with such promptness as to cause no delay in Work, all samples required by the Contract Documents. All samples will have been checked by and accompanied by a specific written indication that the CONTRACTOR has satisfied CONTRACTOR's responsibilities under the Contract Documents with respect to the review of the submission and will be identified clearly as to material, Supplier, pertinent data such as catalog numbers and the use for which intended.

6.20.3 Before submission of each Shop Drawing or sample the CONTRACTOR shall have determined and verified all quantities, dimensions, specified performance criteria, installation requirements, materials, catalog numbers and similar data with respect thereto and reviewed or coordinated each Shop Drawing or sample with other Shop Drawings and samples and with the requirements of the Work and the Contract Documents.

6.20.4 At the time of each submission the CONTRACTOR shall give the Contracting Officer specific written notice of each variation that the Shop Drawings or samples may have from the requirements of the Contract Documents, and, in addition, shall cause a specific notation to be made on each Shop Drawing submitted to the Contracting Officer for review and Approval of each such variation. All variations of the proposed Shop Drawing from that specified will be identified in the submission and available maintenance, repair and replacement service will be indicated. The submittal will also contain an itemized estimate of all costs that will result directly or indirectly from acceptance of such variation, including costs of redesign and claims of other Contractors affected by the resulting change, all of which shall be considered by the DEPARTMENT in evaluating the proposed variation. If the variation may result in a change of Contract Time or Price, or Contract responsibility, and is not minor in nature; the CONTRACTOR must submit a written request for Change Order with the variation to notify the DEPARTMENT of his intent. The DEPARTMENT may require the CONTRACTOR to furnish at the CONTRACTOR's expense additional data about the proposed variation. The Contracting Officer may reject any variation request which the Contracting Officer determines is not in the best interest of the DEPARTMENT.

6.21 Shop Drawing and Sample Review:

6.21.1 The Contracting Officer will review with reasonable promptness Shop Drawings and samples, but the Contracting Officer's review will be only for conformance with the design concept of the Project and for compliance with the information given in the Contract Documents and shall not extend to means, methods, techniques, sequences or procedures of construction (except where a specific means, method, technique, sequence or procedure of construction is indicated in or required by the Contract Documents) or to safety precautions or programs incident thereto. The review of a separate item as such will not indicate acceptance of the assembly in which the item functions. The CONTRACTOR shall make corrections required by the Contracting Officer and shall return the required number of corrected copies of Shop Drawings and submit as required new samples for review. The CONTRACTOR shall direct specific attention in writing to revisions other than the corrections called for by the Contracting Officer on previous submittals.

6.21.2 The Contracting Officer's review of Shop Drawings or samples shall not relieve CONTRACTOR from responsibility for any variation from the requirements of the Contract Documents unless the CONTRACTOR has in writing advised the Contracting Officer of each such variation at the time of submission as required by paragraph 6.20.4 The Contracting Officer if he so determines, may give written Approval of each such variation by Change Order, except that, if the variation is minor and no Change Order has been requested a

specific written notation thereof incorporated in or accompanying the Shop Drawing or sample review comments shall suffice as a modification. Approval by the Contracting Officer will not relieve the CONTRACTOR from responsibility for errors or omissions in the Shop Drawings or from responsibility for having complied with the provisions of paragraph 6.20.3.

6.21.3 The DEPARTMENT shall be responsible for all DEPARTMENT review costs resulting from the initial submission and the fors resubmittal. The CONTRACTOR shall, at the discretion of the Contracting Agency, pay all review costs incurred by the DEPARTMENT as a result of any additional re-submittals.

6.21.4 Where a Shop Drawing or sample is required by the Specifications, any related Work performed prior to the Contracting Officer's review and Approval of the pertinent submission will be the sole expense and responsibility of the CONTRACTOR.

6.22 Maintenance During Construction:

The CONTRACTOR shall maintain the Work during construction and until Substantial Completion, at which time the responsibility for maintenance shall be established in accordance with paragraph 13.10.

6.23 Continuing the Work:

The CONTRACTOR shall carry on the Work and adhere to the progress schedule during all disputes or disagreements with the DEPARTMENT. No Work shall be delayed or postponed pending resolution of any disputes, disagreements, or claims except as the CONTRACTOR and the Contracting Officer may otherwise agree in writing.

6.24 Consent to Assignment:

The CONTRACTOR shall obtain the prior written consent of the Contracting Officer to any proposed assignment of any interest in, or part of this Contract. The consent to any assignment or transfer shall not operate to relieve the CONTRACTOR or his Sureties of any of his or its obligations under this Contract or the Performance Bonds. Nothing herein contained shall be construed to hinder, prevent, or affect an assignment of monies due, or to become due hereunder, made for the benefit of the CONTRACTOR's creditors pursuant to law.

6.25 Use of Explosives:

6.25.1 When the use of explosives is necessary for the prosecution of the Work, the CONTRACTOR shall exercise the utmost care not to endanger life or property, including new Work and shall follow all Regulatory Requirements applicable to the use of explosives. The CONTRACTOR shall be responsible for all damage resulting from the use of explosives.

6.25.2 All explosives shall be stored in a secure manner in compliance with all Regulatory Requirements, and all such storage places shall be clearly marked. Where no Regulatory Requirements apply, safe storage shall be provided not closer than 1,000 feet from any building, camping area, or place of human occupancy.

6.25.3 The CONTRACTOR shall notify each public utility owner having structures in proximity to the site of his intention to use explosives. Such notice shall be given sufficiently in advance to enable utility owners to take such steps as they may deem necessary to protect their property from injury. However, the CONTRACTOR shall be responsible for all damage resulting from the use of the explosives, whether or not, utility owners act to protect their property.

6.26 CONTRACTOR's Records:

6.26.1 Records of the CONTRACTOR and Subcontractors relating to personnel, payrolls, invoices of materials, and any and all other data relevant to the performance of this Contract, must be kept on a generally recognized accounting system. Such records must be available during normal work hours to the Contracting Officer for purposes of investigation to ascertain compliance with Regulatory Requirements and provisions of the Contract

Documents.

6.26.2 Payroll records must contain the name and address of each employee, his correct classification, rate of pay, daily and weekly number of hours of work, deductions made, and actual wages paid. The CONTRACTOR and Subcontractors shall make employment records available for inspection by the Contracting Officer and representatives of the U.S. and/or State Department of Labor and will permit such representatives to interview employees during working hours on the Project.

6.26.3 Records of all communications between the DEPARTMENT and the CONTRACTOR and other parties, where such communications affected performance of this Contract, must be kept by the CONTRACTOR and maintained for a period of three years from Final Acceptance. The DEPARTMENT or its assigned representative may perform an audit of these records during normal work hours after written notice to the CONTRACTOR.

6.27 Load Restrictions

The CONTRACTOR shall comply with all load restrictions as set forth in the "Administrative Permit Manual", and Title 17, Chapter 25, of the Alaska Administrative Code in the hauling of materials on public roads, beyond the limits of the project, and on all public roads within the project limits that are scheduled to remain in use upon completion of the project.

Overload permits may, at the discretion of the State, be issued for travel beyond the project limits for purposes of mobilization and/or demobilization. Issuance of such a permit will not relieve the CONTRACTOR of liability for damage which may result from the moving of equipment.

The operation of equipment of such weight or so loaded as to cause damage to any type of construction will not be permitted. No overloads will be permitted on the base course or surface course under construction. No loads will be permitted on a concrete pavement, base or structure before the expiration of the curing period. The CONTRACTOR shall be responsible for all damage done by his equipment.

ARTICLE 7 - LAWS AND REGULATIONS

7.1 Laws to be Observed

The CONTRACTOR shall keep fully informed of all federal and state Regulatory Requirements and all orders and decrees of bodies or tribunals having any jurisdiction or authority, which in any manner affect those engaged or employed on the Work, or which in any way affect the conduct of the Work. The CONTRACTOR shall at all times observe and comply with all such Regulatory Requirements, orders and decrees; and shall protect and indemnify the DEPARTMENT and its representatives against claim or liability arising from or based on the violation of any such Regulatory Requirement, order. or decree whether by the CONTRACTOR, Subcontractor, or any employee of either. Except where otherwise expressly required by applicable Regulatory Requirements, the DEPARTMENT shall not be responsible for monitoring CONTRACTOR's compliance with any Regulatory Requirements.

7.2 Permits, Licenses, and Taxes

7.2.1 The CONTRACTOR shall procure all permits and licenses, pay all charges, fees and taxes, and give all notices necessary and incidental to the due and lawful prosecution of the Work. As a condition of performance of this Contract, the CONTRACTOR shall pay all federal, state and local taxes incurred by the CONTRACTOR, in the performance of this Contract. Proof of payment of these taxes is a condition precedent to final payment by the DEPARTMENT under this Contract.

7.2.2 The CONTRACTOR's certification that taxes have been paid (as contained in the *Release of Contract*) will be verified with the Department of Revenue and Department of Labor, prior to final payment.

7.2.3 If any federal, state or local tax is imposed, charged, or repealed after the date of bid opening and is made applicable to and paid by the CONTRACTOR on the articles or supplies herein contracted for, then the Contract shall be increased or decreased accordingly by a Change Order.

7.3 Patented Devices, Materials and Processes

If the CONTRACTOR employs any design, device, material, or process covered by letters of patent, trademark or copyright, the CONTRACTOR shall provide for such use by suitable legal agreement with the patentee or owner. The CONTRACTOR and the Surety shall indemnify and save harmless the DEPARTMENT, any affected third party, or political subdivision from any and all claims for infringement by reason of the use of any such patented design, device, material or process, or any trademark or copyright, and shall indemnify the DEPARTMENT for any costs. expenses, and damages which it may be obliged to pay by reason of any infringement, at any time during the prosecution or after the completion of the Work.

7.4 Compliance of Specifications and Drawings:

If the CONTRACTOR observes that the Specifications and Drawings supplied by the DEPARTMENT are at variance with any Regulatory Requirements, CONTRACTOR shall give the Contracting Officer prompt written notice thereof, and any necessary changes will be authorized by one of the methods indicated in paragraph 9.2. as determined appropriate by the Contracting Officer. If the CONTRACTOR performs any Work knowing or having reason to know that it is contrary to such Regulatory Requirements, and without such notice to the Contracting Officer, the CONTRACTOR shall bear all costs arising therefrom; however, it shall not be the CONTRACTOR's primary responsibility to make certain that the Specifications and Drawings supplied by the DEPARTMENT are in accordance with such Regulatory Requirements.

7.5 Accident Prevention:

The CONTRACTOR shall comply with AS 18.60.075 and all pertinent provisions of the Construction Code Occupational Safety and Health Standards issued by the Alaska Department of Labor.

7.6 Sanitary Provisions:

The CONTRACTOR shall provide and maintain in a neat and sanitary condition such accommodations for the use of his employees and DEPARTMENT representatives as may be necessary to comply with the requirements of the State and local Boards of Health, or of other bodies or tribunals having jurisdiction.

7.7 Business Registration:

Comply with AS 08.18.011, as follows: "it is unlawful for a person to submit a bid or work as a contractor until he has been issued a certificate of registration by the Department of Commerce. A partnership or joint venture shall be considered registered if one of the general partners or venturers whose name appears in the name under which the partnership or venture does business is registered."

7.8 Professional Registration and Certification:

All craft trades, architects, engineers and land surveyors, electrical administrators, and explosive handlers employed under the Contract shall specifically comply with applicable provisions of AS 08.18, 08.48, 08.40, and 08.52. Provide copies of individual licenses within seven days following a request from the Contracting Officer.

7.9 Local Building Codes:

The CONTRACTOR shall comply with AS 35.10.025 which requires construction in accordance with applicable local building codes to include the obtaining of required permits.

7.10 Air Quality Control:

The CONTRACTOR shall comply with all applicable provisions of AS 46.03.04 as pertains to Air Pollution Control.

7.11 Archaeological or Paleontological Discoveries:

When the CONTRACTOR's operation encounters prehistoric artifacts, burials, remains of dwelling sites, or paleontological remains, such as shell heaps, land or sea mammal bones or tusks, the CONTRACTOR shall cease operations immediately and notify the Contracting Officer. No artifacts or specimens shall be further disturbed or removed from the ground and no further operations shall be performed at the site until so directed. Should the Contracting Officer order suspension of the CONTRACTOR's operations in order to protect an archaeological or historical finding, or order the CONTRACTOR to perform extra Work, such shall be covered by an appropriate Contract change document.

7.12 Applicable Alaska Preferences:

7.12.1 In determining the low bidder for State funded projects, a 5% bid preference has been given to "Alaska bidders", as required under AS 36.30.170. "Alaska bidder" means a person who:
(1) holds a current Alaska business license;
(2) submits a bid for goods, services, or construction under the name as appearing on the person's current Alaska business license
(3) has maintained a place of business within the state staffed by the bidder or an employee of the bidder for a period of six months immediately preceding the date of the bid;
(4) is incorporated or qualified to do business under the laws of the state, is a sole proprietorship, and the proprietor is a resident of the state or is a partnership, and all partners are residents of the state; and
(5) if a joint venture, is composed entirely of ventures that qualify under (1) through (4), above.

7.12.2 In determining the low bidder for State funded projects, an "Alaska products" preference has been given as required under AS 36.30.326 - 36.30.332, when the bidder designates the use of Alaska products. The Bidder shall complete the Alaska Products Preference Worksheet per its instructions and submit it with the Bid

Proposal. If the successful Bidder/CONTRACTOR proposes to use an Alaska product and does not do so, a penalty will be assessed against the successful Bidder/CONTRACTOR in an amount equal to the product preference percentage granted to the successful Bidder/CONTRACTOR plus one percent multiplied by the total declared value of the Alaska products proposed but not used.

7.12.3 Pursuant to AS 36.15.050 and AS 36.30.322, "agricultural/wood" products harvested in Alaska shall be used in State funded projects whenever they are priced no more than seven percent above agricultural/wood products harvested outside the state and are of a like quality as compared with agricultural/wood products harvested outside the state, when such products are not utilized, the CONTRACTOR shall document the efforts he made towards obtaining agricultural/wood products harvested in Alaska and include in this documentation a written statement that he contacted the manufacturers and suppliers identified on the Department of Commerce and Economic Development's list of suppliers of Alaska forest products concerning the availability of agricultural/wood products harvested in Alaska and, if available, the product prices. The CONTRACTOR's use of agricultural/wood products that fail to meet the requirements of this section shall be subject to the provisions of paragraphs 12.6 through 12.9 relating to Defective Work.

7.12.4 The CONTRACTOR shall maintain records, in a format acceptable to the Contracting Officer, which establish the type and extent of "agricultural/wood" and "Alaska" products utilized. All record keeping and documentation associated with the requirements 7.12.2 and 7.12.3 of this paragraph, must be provided to the DEPARTMENT upon written request or as otherwise provided within the Contract Documents.

7.13 Wages and Hours of Labor:

7.13.1 One certified copy of all payrolls shall be submitted weekly to the State Department of Labor and, upon request, to the Contreting Officer to assure to assure compliance with AS 36.05.040, *Filing Schedule of Employees Wages Paid and Other Information.* The CONTRACTOR shall be responsible for the submission of certified copies of payrolls of all Subcontractors. The certification shall affirm that the payrolls are current and complete, that the wage rates contained therein are not less than the applicable rates referenced in these Contract Documents, and that the classification set forth for each laborer or mechanic conforms with the Work he performed. The CONTRACTOR and his Subcontractors shall attend all hearings and conferences and produce such books, papers, and documents all as requested by the Department of Labor. Should federal funds be involved, the appropriate federal agency shall also receive a copy of the CONTRACTOR's certified payrolls. Regardless of project funding source, copies of all certified payrolls supplied to the State Department of Labor by the CONTRACTOR shall be supplied also to the Project Manager upon request, including submittals made by, or on behalf of, subcontractors.

7.13.2 The following labor provisions shall also apply to this Contract:

a. The CONTRACTOR and his Subcontractors shall pay all employees unconditionally and not less than once a week;

b. wages may not be less than those stated under AS 36.05.010, regardless of the contractual relationship between the CONTRACTOR or Subcontractors and laborers, mechanics, or field surveyors;

c. the scale of wages to be paid shall be posted by the CONTRACTOR in a prominent and easily accessible place at the site of the Work;

d. the DEPARTMENT shall withhold so much of the accrued payments as is necessary to pay to laborers, mechanics, or field surveyors employed by the CONTRACTOR or Subcontractors the difference between

1. the rates of wages required by the Contract to be paid laborers, mechanics, or field surveyors on the Work, and

2. the rates of wages in fact received by laborers, mechanics or field surveyors.

7.13.3 Within three calendar days of award of a construction contract, the CONTRACTOR shall file a "Notice of Work" with the Department of Labor and shall pay all related fees. The Contracting Officer will not issue Notice to Proceed to the CONTRACTOR until such notice and fees have been paid to the State Department of Labor. Failure of the CONTRACTOR to file the Notice of Work and pay fees within this timeframe shall not constitute grounds for an extension of contract time or adjustment of contract price.

7.14 Overtime Work Hours and Compensation:

Pursuant to 40 *U.S.C. 327-330* and AS 23.10.060 -.110, the CONTRACTOR shall not require nor permit any laborer or mechanic in any workweek in which he is employed on any Work under this Contract to work in excess of eight hours in any Calendar Day or in excess of forty hours in such workweek on Work subject to the provisions of the *Contract Work Hours and Safety Standards Act* unless such laborer or mechanic receives compensation at a rate not less than one and one half times his basic rate of pay for all such hours worked in excess of eight hours in any Calendar Day or in excess of forty hours in such workweek whichever is the greater number of overtime hours. In the event of any violation of this provision, the CONTRACTOR shall be liable to any affected employee for any amounts due and penalties and to the DEPARTMENT for liquidated damages. Such liquidated damages shall be computed with respect to each individual laborer or mechanic employed in violation of this provision in the sum of $10.00 for each Calendar Day on which such employee was required or permitted to be employed on such Work in excess of eight hours or in excess of the standard workweek of forty hours without payment of the overtime wages required by this paragraph.

ARTICLE 8 - OTHER WORK

8.1 Related Work at Site:

8.1.1 The DEPARTMENT reserves the right at any time to contract for and perform other or additional work on or near the Work covered by the Contract.

8.1.2 When separate contracts are let within the limits of the Project, the CONTRACTOR shall conduct his Work so as not to interfere with or hinder the work being performed by other contractors. The CONTRACTOR when working on the same Project with other contractors shall cooperate with such other contractors. The CONTRACTOR shall join his Work with that of the others in an acceptable manner and shall perform it in proper sequence to that of others.

8.1.3 If the fact that other such work is to be performed is identified or shown in the Contract Documents the CONTRACTOR shall assume all liability, financial or otherwise, in connection with this Contract and indemnify and save harmless the DEPARTMENT from any and all damages or claims that may arise because of inconvenience, delay, or loss experienced by the CONTRACTOR because of the presence and operations of other contractors.

8.1.4 If the fact that such other work is to be performed was not identified or shown in the Contract Documents, written notice thereof will be given to the CONTRACTOR prior to starting any such other work. If the CONTRACTOR believes that such performance will require an increase in Contract Price or Contract Time, the CONTRACTOR shall notify the Contracting Officer of such required increase within fifteen (15) calendar days following receipt of the Contracting Officer's notice. Should the Contracting Officer find such increase(s) to be justified, a Change Order will be executed.

8.2 Access, Cutting, and Patching:

The CONTRACTOR shall afford each utility owner and any other contractor who is a party to such a direct contract with the DEPARTMENT (or the DEPARTMENT, if the DEPARTMENT is performing the additional work with the DEPARTMENT's employees) proper and safe access to the site and a reasonable opportunity for the introduction and storage of materials and equipment and the execution of such work, and shall properly connect and coordinate the Work with the work of others. The CONTRACTOR shall do all cutting, fitting and patching of the Work that may be required to make its several parts come together properly and integrate with such other work, the CONTRACTOR shall not endanger any work of others by cutting, excavating or otherwise altering their work and will only cut or alter such other work with the written consent of the Contracting Officer. The duties and responsibilities of the CONTRACTOR under this paragraph are for the benefit of other contractors to the extent that there are comparable provisions for the benefit of the CONTRACTOR in said direct contracts between the DEPARTMENT and other contractors.

8.3 Defective Work by Others:

If any part of the CONTRACTOR's Work depends for proper execution or results upon the work of any such other contractor, utility owner, or the DEPARTMENT, the CONTRACTOR shall inspect and promptly report to the Contracting Officer in writing any delays, defects or deficiencies in such work that render it unavailable or unsuitable for such proper execution and results. The CONTRACTOR's failure to so report will constitute an acceptance of the other work as fit and proper for integration with CONTRACTOR's Work except for latent or nonapparent defects and deficiencies in the other work.

8.4 Coordination:

If the DEPARTMENT contracts with others for the performance of other work at the site, Contracting Officer will have authority and responsibility for coordination of the activities among the various prime contractors.

ARTICLE 9 - CHANGES

9.1 DEPARTMENT's Right to Change:

Without invalidating the Contract and without notice to any Surety, the DEPARTMENT may, at any time or from time to time, order additions, deletions or revisions in the Work within the general scope of the Contract, including but not limited to changes:

9.1.1 In the Contract Documents;

9.1.2 In the method or manner of performance of the Work;

9.1.3 In State-furnished facilities, equipment, materials, services, or site;

9.1.4 Directing acceleration in the performance of the Work.

9.2 Authorization of Changes within the General Scope:

Additions, deletions, or revisions in the Work within the general scope of the Contract as specified in 9.1 shall be authorized by one or more of following ways:

9.2.1 Directive (pursuant to paragraph 9.3)

9.2.2 A Change Order (pursuant to paragraph 9.4)

9.2.3 DEPARTMENT's acceptance of Shop Drawing variations from the Contract Documents as specifically identified by the CONTRACTOR as required by paragraph 6.20.4.

9.3 Directive:

9.3.1 The Contracting Officer shall provide written clarification or interpretation of the Contract Documents (pursuant to paragraph 3.6).

9.3.2 The Contracting Officer may authorize minor variations in the Work from the requirements of the Contract Documents which do not involve an adjustment in the Contract Price or the Contract Time and are consistent with the overall intent of the Contract Documents.

9.3.3 The Contracting Officer may order the Contractor to correct Defective Work or methods which are not in conformance with the Contract Documents.

9.3.4 The Contracting Officer may direct the commencement or suspension of Work or emergency related Work (as provided in paragraph 6.19).

9.3.5 Upon the issuance of a Directive to the CONTRACTOR by the Contracting Officer, the CONTRACTOR shall proceed with the performance of the Work as prescribed by such Directive.

9.3.6 If the CONTRACTOR believes that the changes noted in a Directive may cause an increase in the Contract Price or an extension of Contract Time, the CONTRACTOR shall immediately provide written notice to the Contracting Officer depicting such increases before proceeding with the Directive, except in the case of an emergency. If the Contracting Officer finds the increase in Contract Price or the extension of Contract Time justified, a Change Order will be issued. If however, the Contracting Officer does not find that a Change Order is justified, the Contracting Officer may direct the CONTRACTOR to proceed with the Work. The CONTRACTOR shall cooperate with the Contracting Officer in keeping complete daily records of the cost of such Work. If a Change Order is ultimately determined to be justified, in the absence of agreed prices and unit prices, payment for such Work will be made on a "cost of the work basis" as provided in 10.4

9.4 Change Order:

A change in Contract Time, Contract Price, or responsibility may be made for changes within the scope of the Work by Change Order. Upon receipt of an executed Change Order, the CONTRACTOR shall promptly proceed with the Work involved which will be performed under the applicable conditions of the Contract Documents except as otherwise specifically provided. Changes in Contract Price and Contract Time shall be made in accordance with Articles 10 and 11. A Change Order shall be considered executed when it is signed by the DEPARTMENT.

9.5 Shop Drawing Variations:

Variations by shop drawings shall only be eligible for consideration under 9.4 when the conditions affecting the price, time, or responsibility are identified by the CONTRACTOR in writing and a request for a Change Order is submitted as per 6.20.4.

9.6 Changes Outside the General Scope; Supplemental Agreement:

Any change which is outside the general scope of the Contract, as determined by the Contracting Officer, must be authorized by a Supplemental Agreement signed by the appropriate representatives of the DEPARTMENT and the CONTRACTOR.

9.7 Unauthorized Work:

The CONTRACTOR shall not be entitled to an increase in the Contract Price or an extension of the Contract Time with respect to any work performed that is not required by the Contract Documents as amended, modified and supplemented as provided in this Article 9, except in the case of an emergency as provided in paragraph 6.19 and except in the case of uncovering Work as provided in paragraph 12.4.2.

9.8 Notification of Surety:

If notice of any change affecting the general scope of the Work or the provisions of the Contract Documents (including, but not limited to, Contract Price or Contract Time) is required by the provisions of any bond to be given to a Surety, the giving of any such notice will be the CONTRACTOR's responsibility, and the amount of each applicable bond will be adjusted accordingly.

9.9 Differing Site Conditions:

9.9.1 The CONTRACTOR shall promptly, and before such conditions are disturbed (except in an emergency as permitted by paragraph 6.19), notify the Contracting Officer in writing of: (1) subsurface or latent physical conditions at the site differing materially from those indicated in the Contract, and which could not have been discovered by a careful examination of the site, or (2) unknown physical conditions at the site, of an unusual nature, differing materially from those ordinarily encountered and generally recognized as inherent in work of the character provided for in this Contract. The Contracting Officer shall promptly investigate the conditions, and if the Contracting Officer finds that such conditions do materially so differ and cause an increase or decrease in the CONTRACTOR's cost of, or time required for, performance of this Contract, an adjustment shall be made and the Contract modified in writing accordingly. An adjustment in compensation shall be computed under Article 10.

9.9.2 Any claim for additional compensation by the CONTRACTOR under this clause shall be made in accordance with Article 15. In the event that the Contracting Officer and the CONTRACTOR are unable to reach an agreement concerning an alleged differing site condition, the CONTRACTOR will be required to keep an accurate and detailed record which will indicate the actual "cost of the work" done under the alleged differing site condition. Failure to keep such a record shall be a bar to any recovery by reason of such alleged differing site conditions. The Contracting Officer shall be given the opportunity to supervise and check the keeping of such records.

9.10 **Interim Work Authorization:**

An Interim Work Authorization may be used to establish a change within the scope of the Work; however, only a Change Order shall establish associated changes in Contract Time and Price. Work authorized by Interim Work Authorization shall be converted to a Change Order. The basis of payment shall be as stated in the Interim Work Authorization, unless it states that the basis of payment has not been established and is to be negotiated, in which case the Cost of the Work shall be documented pursuant to Article 10.4, to establish a basis for negotiating a lump sum price for the Change Order.

ARTICLE 10 - CONTRACT PRICE; COMPUTATION AND CHANGE

10.1 Contract Price:

The Contract Price constitutes the total compensation (subject to authorized adjustments) payable to the CONTRACTOR for performing the Work. All duties, responsibilities and obligations assigned to or undertaken by the CONTRACTOR shall be at his expense without change in the Contract Price. The Contract Price may only be changed by a Change Order or Supplemental Agreement.

10.2 Claim for Price Change:

Any claim for an increase or decrease in the Contract Price shall be submitted in accordance with the terms of Article 15, and shall not be allowed unless notice requirements of this Contract have been met.

10.3 Change Order Price Determination:

The value of any Work covered by a Change Order for an increase or decrease in the Contract Price shall be determined in one of the following ways:

10.3.1 Where the Work involved is covered by unit prices contained in the Contract Documents, by application of unit prices to the quantities of the items involved (subject to the provisions of subparagraphs 10.9.1 through 10.9.3, inclusive).

10.3.2 By mutual acceptance of a lump sum (fixed price) which includes overhead and profit. The lump sum (fixed price) shall be negotiated on the basis of the estimated "cost of the work" in accordance with Articles 10.4 and 10.5. The following maximum rates of cost markup (to cover both overhead and profit of the CONTRACTOR) shall be used in the negotiation of a Lump Sum Change Order:

a. For costs incurred under paragraphs 10.4.1 and 10.4.2, the CONTRACTOR's fee shall be twenty percent;

b. For costs incurred under paragraph 10.4.3, the CONTRACTOR's fee shall be ten percent; and if a subcontract is on the basis of "cost of the work" plus a fee, the maximum allowable to CONTRACTOR on account of overhead and profit for itself and all Subcontractors and multiple tiers thereof shall be fifteen percent of the cost incurred by the subcontractor actually performing the work;

c. No fee shall be payable on the basis of costs itemized under paragraphs 10.4.4, 10.4.5 and 10.5;

d. The amount of credit to be allowed by the CONTRACTOR to the DEPARTMENT for any such change which results in a net decrease in cost will be the amount of the actual net decrease plus a deduction in CONTRACTOR's fee by an amount equal to twenty percent of the net decrease; and

e. When both additions and credits are involved in any one change, the adjustment in CONTRACTOR's fee shall be computed on the basis of the net change in accordance with paragraphs 10.3.2.a through 10.3.2.d, inclusive

10.3.3 When 10.3.1 and 10.3.2 are inapplicable, on the basis of the "cost of the work" (determined as provided in paragraphs 10.4 and 10.5) plus a CONTRACTOR's fee for overhead and profit (determined as provided in paragraph 10.6).

10.3.4 Before a Change Order or Supplemental Agreement is Approved, the CONTRACTOR shall submit cost or pricing data regarding the changed or extra Work. The CONTRACTOR shall certify that the data submitted is, to his best knowledge and belief, accurate, complete and current as of a mutually determined specified date and that such data will continue to be accurate and complete during the performance of the changed or extra Work.

10.4 **Cost of the Work:**

The term "cost of the work" means the sum of all costs necessarily incurred and paid by the CONTRACTOR in the proper performance of the Work. Except as otherwise may be agreed to in writing by the DEPARTMENT, such costs shall be in amount no higher than those prevailing in the locality of the Project, shall include only the following items and shall not include any of the costs itemized in subparagraph 10.5:

10.4.1 Payroll costs for employees in the direct employ of the CONTRACTOR in the performance of the Work under schedules of job classifications agreed upon by the DEPARTMENT and the CONTRACTOR. Payroll costs for employees not employed full time on the Work shall be apportioned on the basis of their time spent on the Work. Payroll costs shall be limited to, salaries and wages plus the cost of fringe benefits which shall include social security contributions, unemployment, excise and payroll taxes, workers' or workmen's compensation, health and retirement benefits, bonuses, sick leave, vacation and holiday pay applicable thereto. Such employees shall include manual workers up through the level of foreman but shall not include general foremen, superintendents, and non-manual employees. The expenses of performing Work after regular working hours, on Saturday, Sunday or legal holidays, shall be included in the above to the extent authorized by the DEPARTMENT.

10.4.2 Cost of all materials and equipment furnished and incorporated or consumed in the Work, including costs of transportation and storage thereof, and Suppliers' field services required in connection therewith. All cash discounts shall accrue to the CONTRACTOR unless the DEPARTMENT deposits funds with the CONTRACTOR with which to make payments, in which case the cash discounts shall accrue to the DEPARTMENT. All trade discounts, rebates and refunds and all returns from sale of surplus materials and equipment shall accrue to the DEPARTMENT, and the CONTRACTOR shall make provisions so that they may be obtained.

10.4.3 Payments made by the CONTRACTOR to Subcontractors for Work performed by Subcontractors. If required by the DEPARTMENT, CONTRACTOR shall obtain competitive quotes from Subcontractors or Suppliers acceptable to the CONTRACTOR and shall deliver such quotes to the DEPARTMENT who will then determine which quotes will be accepted. If a subcontract provides that the Subcontractor is to be paid on the basis of "cost of the work" plus a fee, the Subcontractor' "cost of the work" shall be determined in the same manner as the CONTRACTOR's "cost of work" as described in paragraphs 10.4 through 10.5; and the Subcontractor's fee shall be established as provided for under subparagraph 10.6.2 clause b. All subcontracts shall be subject to the other provisions of the Contract Documents insofar as applicable.

10.4.4 Costs of special consultants (including but not limited to engineers, architects, testing laboratories, and surveyors) employed for services necessary for the completion of the Work.

10.4.5 Supplemental costs including the following:

a. The proportion of necessary transportation, travel and subsistence expenses of the CONTRACTOR's employees incurred in discharge of duties connected with the Work.

b. Cost, including transportation and maintenance, of all materials, supplies, equipment, machinery, appliances, office and temporary facilities at the site and hand tools not owned by the workers, which are consumed in the performance of the Work, and cost less market value of such items used but not consumed which remain the property of the CONTRACTOR.

c. Rentals of all construction equipment and machinery and the parts thereof whether rented from the CONTRACTOR or others in accordance with rental agreements Approved by the DEPARTMENT and the costs of transportation, loading, unloading, installation, dismantling and removal thereof - all in accordance with terms of said rental agreements. The rental of any such equipment, machinery or parts shall cease when the use thereof is no longer necessary for the Work.

For any machinery or special equipment (other than small tools) which has been authorized by the Project

Manager, the CONTRACTOR shall receive the rental rates in the current edition and appropriate volume of the "Rental Rate Blue Book for Construction Equipment", published by Dataquest, Inc., 1290 Ridder Park Drive, San Jose, CA 95131. Hourly rental rates shall be determined as follows:

The established hourly rental rate shall be equal to the adjusted monthly rate for the basic equipment plus the adjusted monthly rate for applicable attachments, both divided by 176, and multiplied by the area adjustment factor, plus the estimated hourly operating cost.

The adjusted monthly rate is that resulting from application of the rate adjustment formula in order to eliminate replacement cost allowances in machine depreciation and contingency cost allowances.

Attachments shall not be included unless required for the time and materials work.

For equipment not listed in The Blue Book, the CONTRACTOR shall receive a rental rate as agreed upon before such work is begun. If agreement cannot be reached, the DEPARTMENT reserves the right to establish a rate based on similar equipment in the Blue Book or prevailing commercial rates in the area.

These rates shall apply for equipment used during the CONTRACTOR's regular shift of 10 hours per day. Where the equipment is used more than 10 hours per day, either on the CONTRACTOR's normal work or on time and materials, and either on single or multiple shifts, an overtime rate, computed as follows, shall apply:

The hourly overtime rate shall be equal to the adjusted monthly rate for the basic equipment plus the adjusted monthly rate for applicable attachments, both divided by 352, and multiplied by the area adjustment factor, plus the estimated hourly operating cost.

Equipment which must be rented or leased specifically for work required under this section shall be authorized in writing by the Project Manager. The CONTRACTOR shall be paid invoice price plus 15%.

When it is necessary to obtain equipment from sources beyond the project limits exclusively for time and materials, work, the actual cost of transferring the equipment to the site of the work and return will be allowed as an additional item of expense. Where the move is made by common carrier, the move-in allowance will be limited to the amount of the freight bill or invoice. If the CONTRACTOR hauls the equipment with his own forces, the allowance will be limited to the rental rate for the hauling unit plus operator wages. In the event that the equipment is transferred under its own power, the moving allowance will be limited to one-half of the normal hourly rental rate plus operator's wages. In the event that the move-out is to a different location, payment will in no instance exceed the amount of the move-in. Move-in allowance shall not be made for equipment brought to the project for time and materials work which is subsequently retained on the project and utilized for completion of contract items, camp maintenance, or related work.

Equipment ordered to be on a stand-by basis shall be paid for at the stand-by rental rate for the number of hours in the CONTRACTOR'S normal work shift, but not to exceed 8 hours per day. The stand-by rental rate shall be computed as follows:

The hourly stand-by rate shall be equal to the adjusted monthly rate for the basic equipment plus the adjusted monthly rate for applicable attachments, both divided by 352, all multiplied by the area adjustment factor.

Time will be recorded to the nearest one-quarter hour for purposes of computing compensation to the CONTRACTOR for equipment utilized under these rates.

The equipment rates as determined above shall be full compensation, including overhead and profit, for providing the required equipment and no additional compensation will be made for other costs such as, but not limited to, fuels, lubricants, replacement parts or maintenance costs. Cost of repairs, both major and minor, as well as charges for mechanic's time utilized in servicing equipment to ready it for use prior to moving to the project and similar charges will not be allowed.

d. Sales, consumer, use or similar taxes related to the Work, and for which the CONTRACTOR is liable, imposed by Regulatory Requirements.

e. Deposits lost for causes other than negligence of the CONTRACTOR, any Subcontractor or anyone directly or indirectly employed by any of them or for whose acts any of them may be liable, and royalty payments and fees for permits and licenses.

f. Losses and damages (and related expenses), not compensated by insurance or otherwise, to the Work or otherwise sustained by the CONTRACTOR in connection with the performance and furnishing of the Work provided they have resulted from causes other than the negligence of the CONTRACTOR, any Subcontractor, or anyone directly or indirectly employed by any of them or for whose acts any of them may be liable. Such losses shall include settlements made with the written consent and Approval of the DEPARTMENT. No such losses, damages and expenses shall be included in the "cost of the work" for the purpose of determining the CONTRACTOR's fee. If, however, any such loss or damage requires reconstruction and the CONTRACTOR is placed in charge thereof, the CONTRACTOR shall be paid for services a fee proportionate to that stated in paragraphs 10.6.2.a and 10.6.2.b.

g. The cost of utilities, fuel and sanitary facilities at the site.

h. Minor expenses such as telegrams, long distance telephone calls, telephone service at the site, expressage and similar petty cash items in connection with the Work.

i. Cost of premiums for additional bonds and insurance required because of changes in the Work and premiums for property insurance coverage within the limits of the deductible amounts established by the DEPARTMENT in accordance with Article 5.

10.5 Excluded Costs:

The term "cost of the work" shall not include any of the following:

10.5.1 Payroll costs and other compensation of CONTRACTOR's officers, executives, principals (of partnership and sole proprietorships), general managers, engineers, architects, estimators, attorneys, auditors, accountants, purchasing and contracting agency, expeditors, timekeepers, clerks and other personnel employed by CONTRACTOR whether at the site or in CONTRACTOR's principal or a branch office for general administration of the Work and not specifically included in the agreed upon schedule of job classifications referred to in paragraph 10.4.1 or specifically covered by paragraph 10.4.4 all of which are to be considered administrative costs covered by the CONTRACTOR's fee.

10.5.2 Expenses of CONTRACTOR's principal and branch offices other than CONTRACTOR's office at the site.

10.5.3 Any part of CONTRACTOR's capital expenses including interest on CONTRACTOR's capital employed for the Work and charges against CONTRACTOR for delinquent payments.

10.5.4 Cost of premiums for all bonds and for all insurance whether or not CONTRACTOR is required by the Contract Documents to purchase and maintain the same (except for the cost of premiums covered by subparagraph 10.4.5.i above).

10.5.5 Costs due to the negligence of CONTRACTOR, any Subcontractor, or anyone directly or indirectly employed by any of them or for whose acts any of them may be liable, including but not limited to, the correction of Defective Work, disposal of materials or equipment wrongly supplied and making good any damage to property.

10.5.6 Other overhead or general expense costs of any kind and the costs of any item not specifically and expressly included in paragraph 10.4.

10.6 **CONTRACTOR's Fee:**

The CONTRACTOR's fee allowed to CONTRACTOR for overhead and profit shall be determined as follows.

10.6.1 A mutually acceptable fixed fee; or if none can be agreed upon.

10.6.2 A fee based on the following percentages of the various portions of the "cost of the work":

a. For costs incurred under paragraphs 10.4.1 and 10.4.2, the CONTRACTOR's fee shall be fifteen percent;

b. For costs incurred under paragraph 10.4.3, the CONTRACTOR's fee shall be ten percent; and if a subcontract is on the basis of "cost of the work" plus a fee, the maximum allowable to CONTRACTOR on account of overhead and profit for itself and all Subcontractors and multiple tiers thereof shall be fifteen percent of the cost incurred by the subcontractor actually performing the work;

c. No fee shall be payable on the basis of costs itemized under paragraphs 10.4.4, 10.4.5 and 10.5;

d. The amount of credit to be allowed by the CONTRACTOR to the DEPARTMENT for any such change which results in a net decrease in cost will be the amount of the actual net decrease plus a deduction in CONTRACTOR's fee by an amount equal to fifteen percent of the net decrease; and

e. When both additions and credits are involved in any one change, the adjustment in CONTRACTOR's fee shall be computed on the basis of the net change in accordance with paragraphs 10.6.2.a through 10.6.2.d, inclusive.

10.7 **Cost Breakdown:**

Whenever the cost of any Work is to be determined pursuant to paragraphs 10.4 and 10.5, the CONTRACTOR will submit in a form acceptable to the DEPARTMENT an itemized cost breakdown together with supporting data.

10.8 **Cash Allowances:**

It is understood that CONTRACTOR has included in the Contract Price all allowances so named in the Contract Documents and shall cause the Work so covered to be done by such Subcontractors or Suppliers and for such sums within the limit of the allowances as may be acceptable to the Contracting Officer. CONTRACTOR agrees that:

10.8.1 The allowances include the cost to CONTRACTOR (less any applicable trade discounts) of materials and equipment required by the allowances to be delivered at the site, and all applicable taxes; and

10.8.2 CONTRACTOR's cost for unloading and handling on the site, labor, installation costs, overhead, profit and other expenses contemplated for the allowances have been included in the Contract Price and not in the allowances. No demand for additional payment on account of any thereof will be valid.

Prior to final payment, an appropriate Change Order will be issued to reflect actual amounts due the CONTRACTOR on account of Work covered by allowances, and the Contract Price shall be correspondingly adjusted.

10.9 **Unit Price Work:**

10.9.1 Where the Contract Documents provide that all or part of the Work is to be Unit Price Work, initially the Contract Price will be deemed to include for all Unit Price Work an amount equal to the sum of the established unit prices for each separately identified item of Unit Price Work times the estimated quantity of each item as indicated in the Contract. The estimated quantities of items of Unit Price Work are not guaranteed and are solely for the purpose of comparison of bids and determining an initial Contract Price. Determinations of the actual quantities and classifications of Unit Price Work performed by the CONTRACTOR will be made by the

DEPARTMENT in accordance with paragraph 10.10.

10.9.2 Each unit price will be deemed to include an amount considered by the CONTRACTOR to be adequate to cover the CONTRACTOR's overhead and profit for each separately identified item. If the "Basis of Payment" clause in the Contract Documents relating to any unit price in the bid schedule requires that the said unit price cover and be considered compensation for certain work or material essential to the item, this same work or material will not also be measured or paid for under any other pay item which may appear elsewhere in the Contract Documents.

10.9.3 Payment to the CONTRACTOR shall be made only for the actual quantities of Work performed and accepted or materials furnished, in conformance with the Contract Documents. When the accepted quantities of Work or materials vary from the quantities stated in the bid schedule, or change documents, the CONTRACTOR shall accept as payment in full, payment at the stated unit prices for the accepted quantities of Work and materials furnished, completed and accepted: except as provided below:

a. When the quantity of Work to be done or material to be furnished under any item, for which the total cost of the item exceeds 10% of the total Contract Price, is increased by more than 25 percent of the quantity stated in the bid schedule, or change documents, either party to the Contract, upon demand, shall be entitled to an equitable unit price adjustment on that portion of the Work above 125 percent of the quantity stated in the bid schedule.

b. When the quantity of Work to be done or material to be furnished under any major item, for which the total cost of the item exceeds 10% of the total Contract Price, is decreased by more than 25 percent of the quantity stated in the bid schedule, or change documents either party to the Contract, upon demand, shall be entitled to an equitable price adjustment for the quantity of Work performed or material furnished, limited to a total payment of not more than 75 percent of the amount originally bid for the item.

10.10 Determinations for Unit Prices:

The Contracting Officer will determine the actual quantities and classifications of Unit Price Work performed by the CONTRACTOR. The Contracting Officer will review with the CONTRACTOR preliminary determinations on such matters before finalizing the costs and quantities on the Schedule of Values. The Contracting Officer's acknowledgment thereof will be final and binding on the CONTRACTOR, unless, within 10 days after the date of any such decisions, the CONTRACTOR delivers to the Contracting Officer written notice of intention to appeal from such a decision.

ARTICLE 11 - CONTRACT TIME; COMPUTATION AND CHANGE

11.1 Commencement of Contract Time; Notice to Proceed:

The Contract Time will commence to run on the day indicated in the Notice to Proceed.

11.2 Starting the Work:

No Work on Contract items shall be performed before the effective date of the Notice to Proceed. The CONTRACTOR shall notify the Contracting Officer at least 24 hours in advance of the time actual construction operations will begin. The CONTRACTOR may request a limited Notice to Proceed after Award has been made, to permit him to order long lead materials which could cause delays in Project completion. However, granting is within the sole discretion of the Contracting Officer, and refusal or failure to grant a limited Notice to Proceed shall not be a basis for claiming for delay, extension of time, or alteration of price.

11.3 Computation of Contract Time:

11.3.1 When the Contract Time is specified on a Calendar Day basis, all Work under the Contract shall be completed within the number of Calendar Days specified. The count of Contract Time begins on the day following receipt of the Notice to Proceed by the CONTRACTOR, if no starting day is stipulated therein.

Calendar Days shall continue to be counted against Contract Time until and including the date of Substantial Completion of the Work.

11.3.2 When the Contract completion time is specified as a fixed calendar date, it shall be the date of Substantial Completion.

11.3.3 The Contract Time shall be as stated on form 25D-9, Proposal.

11.4 Time Change:

The Contract Time may only be changed by a Change Order or Supplemental Agreement.

11.5 Extension Due to Delays:

The right of the CONTRACTOR to proceed shall not be terminated nor the CONTRACTOR charged with liquidated or actual damages because of delays to the completion of the Work due to unforeseeable causes beyond the control and without the fault or negligence of the CONTRACTOR, including, but not restricted to the following: acts of God or of the public enemy, acts of the DEPARTMENT in its contractural capacity, acts of another contractor in the performance of a contract with the DEPARTMENT, floods, fires, epidemics, quarantine restrictions, strikes, freight embargoes, unusually severe weather and delays of Subcontractors or Suppliers due to such causes. Any delay in receipt of materials on the site, caused by other than one of the specifically mentioned occurences above, does not of itself justify a time extension, provided that the CONTRACTOR shall within twenty four (24) hours from the beginning of any such delay (unless the Contracting Officer shall grant a further period of the time prior to the date of final settlement of the Contract), notify the Contracting Officer in writing of the cause of delay. The Contracting Officer shall ascertain the facts and the extent of the delay and extend the time for completing the Work when the findings of fact justify such an extension.

11.6 Essence of Contract:

All time limits stated in the Contract Documents are of the essence of the Contract.

11.7 Reasonable Completion Time:

It is expressly understood and agreed by and between the CONTRACTOR and the DEPARTMENT that the date of

beginning and the time for Substantial Completion of the Work described herein are reasonable times for the completion of the Work.

11.8 Delay Damages:

Whether or not the CONTRACTOR's right to proceed with the Work is terminated, he and his Sureties shall be liable for damages resulting from his refusal or failure to complete the Work within the specified time.

Liquidated and actual damages for delay shall be paid by the CONTRACTOR or his Surety to the DEPARTMENT in the amount as specified in the Supplementary Conditions for each Calendar Day the completion of the Work or any part thereof is delayed beyond the time required by the Contract, or any extension thereof. If a listing of incidents resulting from a delay and expected to give rise to actual or liquidated damages is not established by th Contract Documents, then the CONTRACTOR and his Surety shall be liable to the DEPARTMENT for any actual damages occasioned by such delay. The CONTRACTOR acknowledges that the liquidated damages established herein are not a penalty but rather constitute an estimate of damages that the DEPARTMENT will sustain by reason of delayed completion. These liquidated and actual damages are intended as compensation for losses anticipated to arise, and include those items enumerated in the Supplementary Conditions.

These damages will continue to run both before and after termination in the event of default termination. These liquidated damages do not cover excess costs of completion or DEPARTMENT costs, fees, and charges related to reprocurement. If a default termination occurs, the CONTRACTOR or his Surety shall pay in addition to these damages, all excess costs and expenses related to completion as provided by Article 14.2.5.

ARTICLE 12 - QUALITY ASSURANCE

12.1 Warranty and Guaranty:

The CONTRACTOR warrants and guarantees to the DEPARTMENT that all Work will be in accordance with the Contract Documents and will not be Defective. Prompt notice of all defects shall be given to the CONTRACTOR. All Defective Work, whether or not in place, may be rejected, corrected or accepted as provided for in this article.

12.2 Access to Work:

The DEPARTMENT and the DEPARTMENT's representatives, testing agencies and governmental agencies with jurisdiction interests will have access to the Work at reasonable times for their observation, inspecting and testing. The CONTRACTOR shall provide proper and safe conditions for such access.

12.3 Tests and Inspections:

12.3.1 The CONTRACTOR shall give the Contracting Officer timely notice of readiness of the Work for all required inspections, tests or Approvals.

12.3.2 If Regulatory Requirements of any public body having jurisdiction require any Work (or part thereof) to specifically be inspected, tested or approved, the CONTRACTOR shall assume full responsibility therefor, pay all costs in connection therewith and furnish the Contracting Officer the required certificates of inspection, testing or approval. The CONTRACTOR shall also be responsible for and shall pay all costs in connection with any inspection or testing required in connection with DEPARTMENT's acceptance of a Supplier of materials or equipment proposed to be incorporated in the Work, or of materials or equipment submitted for Approval prior to the CONTRACTOR's purchase thereof for incorporation in the Work. The cost of all inspections, tests and approvals in addition to the above which are required by the Contract Documents shall be paid by the CONTRACTOR. The DEPARTMENT may perform additional tests and inspections which it deems necessary to insure quality control. All such failed tests or inspections shall be at the CONTRACTOR's expense.

12.3.4 If any Work (including the work of others) that is to be inspected, tested or Approved is covered without written concurrence of the Contracting Officer, it must, if requested by the Contracting Officer, be uncovered for observation. Such uncovering shall be at the CONTRACTOR's expense unless the CONTRACTOR has given the Contracting Officer timely notice of CONTRACTOR's intention to cover the same and the Contracting Officer has not acted with reasonable promptness in response to such notice.

12.3.5 Neither observations nor inspections, tests or Approvals by the DEPARTMENT or others shall relieve the CONTRACTOR from the CONTRACTOR's obligations to perform the Work in accordance with the Contract Documents.

12.4 Uncovering Work:

12.4.1 If any Work is covered contrary to the written request of the Contracting Officer, it must, if requested by the Contracting Officer, be uncovered for the Contracting Officer's observation and replaced at the CONTRACTOR's expense.

12.4.2 If the Contracting Officer considers it necessary or advisable that covered Work be observed inspected or tested, the CONTRACTOR, at the Contracting Officer's request, shall uncover, expose or otherwise make available for observation, inspection or testing as the Contracting Officer may require, that portion of the Work in question, furnishing all necessary labor, material and equipment. If it is found that such Work is Defective, the CONTRACTOR shall bear all direct, indirect and consequential costs of such uncovering, exposure, observation, inspection and testing and of satisfactory reconstruction, (including but not limited to fees and charges of engineers, architects, attorneys and other professionals) and the DEPARTMENT shall be entitled to an appropriate decrease in the Contract Price. If, however, such Work is not found to be Defective, the CONTRACTOR shall be allowed an increase in the Contract Price or an extension of the Contract Time, or both, directly attributable to such uncovering, exposure, observation, inspection, testing and reconstruction.

12.5 DEPARTMENT May Stop the Work:

If the Work is Defective, or the CONTRACTOR fails to supply suitable materials or equipment, or fails to furnish or perform the Work in such a way that the completed Work will conform to the Contract Documents, the Contracting Officer may order the CONTRACTOR to stop the Work, or any portion thereof, until the cause for such order has been eliminated; however, this right of the Contracting Officer to stop the Work shall not give rise to any duty on the part of the Contracting Officer to exercise this right for the benefit of the CONTRACTOR or any other party.

12.6 Correction or Removal of Defective Work:

If required by the Contracting Officer, the CONTRACTOR shall promptly, as directed, either correct all Defective Work, whether or not fabricated, installed or completed, or, if the Work has been rejected by the Contracting Officer, remove it from the site and replace it with Work which conforms to the requirements of the Contract Documents. The CONTRACTOR shall bear all direct, indirect and consequential costs of such correction or removal (including but not limited to fees and charges of engineers, architects, attorneys and other professionals) made necessary thereby.

12.7 One Year Correction Period:

If within one year after the date of Substantial Completion of the relevant portion of the work or such longer period of time as may be prescribed by Regulatory Requirements or by the terms of any applicable special guarantee required by the Contract Documents or by any specific provision of the Contract Documents, any Work is found to be Defective, the CONTRACTOR shall promptly, without cost to the DEPARTMENT and in accordance with the Contracting Officer's written instructions, either correct such Defective Work, or, if it has been rejected by the Contracting Officer, remove it from the site and replace it with conforming Work. If the CONTRACTOR does not promptly comply with the terms of such instructions, or in an emergency where delay would cause serious risk of loss or damage, the DEPARTMENT may have the Defective Work corrected or the rejected Work removed and replaced, and all direct, indirect and consequential costs of such removal and replacement (including but not limited to fees and charges of engineers, architects, attorneys and other professionals) will be paid by the CONTRACTOR. In special circumstances where a particular item of equipment is placed in continuous service for the benefit of the DEPARTMENT before Substantial Completion of all the Work, the correction period for that item may begin on an earlier date if so provided in the Specifications or by Change Order. Provisions of this paragraph are not intended to shorten the statute of limitations for bringing an action.

12.8 Acceptance of Defective Work:

Instead of requiring correction or removal and replacement of Defective Work, the Contracting Officer may accept Defective Work, the CONTRACTOR shall bear all direct, indirect and consequential costs attributable to the Contracting Officer's evaluation of and determination to accept such Defective Work (costs to include but not be limited to fees and charges of engineers, architects, attorneys and other professionals). If any such acceptance occurs prior to final payment, a Change Order will be issued incorporating the necessary revisions in the Contract Documents with respect to the Work; and the DEPARTMENT shall be entitled to an appropriate decrease in the Contract Price. If the DEPARTMENT has already made final payment to the CONTRACTOR, an appropriate amount shall be paid by the CONTRACTOR or his Surety to the DEPARTMENT.

12.9 DEPARTMENT May Correct Defective Work:

If the CONTRACTOR fails within a reasonable time after written notice from the Contracting Officer to proceed to correct Defective Work or to remove and replace rejected Work as required by the Contracting Officer in accordance with paragraph 12.6, or if the CONTRACTOR fails to perform the Work in accordance with the Contract Documents, or if the CONTRACTOR fails to comply with any other provision of the Contract Documents, the DEPARTMENT may, after 7 days' written notice to the CONTRACTOR, correct and remedy any such deficiency. In exercising the rights and remedies under this paragraph the DEPARTMENT shall proceed expeditiously. To the extent necessary to complete corrective and remedial action, the Contracting Officer may exclude the CONTRACTOR from all or part of the site, take possession of all or part of the Work, and suspend the CONTRACTOR's services related thereto, take possession of the CONTRACTOR's tools, appliances, construction equipment and machinery at the site and incorporate in the Work all materials and equipment stored at the site or approved remote storage sites or for which the DEPARTMENT has paid the CONTRACTOR but which are stored elsewhere. The CONTRACTOR shall allow the Contracting Officer and his authorized representatives such access to the site as may be necessary to enable the Contracting Officer to exercise the rights and remedies under this paragraph. All direct, indirect and consequential costs of the DEPARTMENT in exercising such rights and remedies will be charged against the CONTRACTOR, and a Change Order will be issued incorporating the necessary revisions in the Contract Documents with respect to the Work; and the DEPARTMENT shall be entitled to an appropriate decrease in the Contract Price. Such direct, indirect and consequential costs will include but not be limited to fees and charges of engineers, architects, attorneys and other professionals, all court and arbitration costs and all costs of repair and replacement of work of others destroyed or damaged by correction, removal or replacement of the CONTRACTOR's Defective Work. The CONTRACTOR shall not be allowed an extension of time because of any delay in performance of the work attributable to the exercise, by the Contracting Officer, of the DEPARTMENT's rights and remedies hereunder.

ARTICLE 13 - PAYMENTS TO CONTRACTOR AND COMPLETION

13.1 Schedule of Values:

The Schedule of Values established as provided in paragraph 6.6 will serve as the basis for progress payments and will be incorporated into a form of Application for Payment acceptable to the Contracting Officer. Progress payments on account of Unit Price Work will be based on the number of units completed.

13.2 Preliminary Payments:

Upon approval of the Schedule of Values the CONTRACTOR may be paid for direct costs substantiated by paid invoices and other prerequisite documents required by the General Requirements. Direct costs shall include the cost of bonds, insurance, approved materials stored on the site or at approved remote storage sites, deposits required by a Supplier prior to fabricating materials, and other approved direct mobilization costs substantiated as indicated above. These payments shall be included as a part of the total Contract Price as stated in the Contract.

13.3 Application for Progress Payment:

The CONTRACTOR shall submit to the Contracting Officer for review an Application for Payment filled out and signed by the CONTRACTOR covering the Work completed as of the date of the Application for Payment and accompanied by such supporting documentation as is required by the Contract Documents. Progress payments will be made as the Work progresses on a monthly basis.

13.4 Review of Applications for Progress Payment:

Contracting Officer will either indicate in writing a recommendation of payment or return the Application for Payment to the CONTRACTOR indicating in writing the Contracting Officer's reasons for refusing to recommend payment. In the latter case, the CONTRACTOR may make the necessary corrections and resubmit the Application for Payment.

13.5 Stored Materials and Equipment:

If payment is requested on the basis of materials and equipment not incorporated in the Work but delivered and suitably stored at the site or at another location agreed to in writing, the Application for Payment shall also be accompanied by a bill of sale, paid invoice or other documentation warranting that the DEPARTMENT has received the materials and equipment free and clear of all charges, security interests and encumbrances and evidence that the materials and equipment are covered by appropriate property insurance and other arrangements to protect the DEPARTMENT's interest therein, all of which will be satisfactory to the Contracting Officer. No payment will be made for perishable materials that could be rendered useless because of long storage periods. No progress payment will be made for living plant materials until planted.

13.6 CONTRACTOR's Warranty of Title:

The CONTRACTOR warrants and guarantees that title to all Work, materials and equipment covered by any Application for Payment, whether incorporated in the Project or not, will pass to the DEPARTMENT no later than the time of payment free and clear of any claims, liens, security interests and further obligations.

13.7 Withholding of Payments:

The DEPARTMENT may withhold or refuse payment for any of the reasons listed below provided it gives written notice of its intent to withhold and of the basis for withholding:

13.7.1 The Work is Defective, or completed Work has been damaged requiring correction or replacement, or has been installed without Approval of Shop Drawings, or by an unapproved Subcontractor, or for unsuitable storage of materials and equipment.

13.7.2 The Contract Price has been reduced by Change Order,

13.7.3 The DEPARTMENT has been required to correct Defective Work or complete Work in accordance with paragraph 12.9.

13.7.4 The DEPARTMENT's actual knowledge of the occurrence of any of the events enumerated in paragraphs 14.2.1.a through 14.2.1.k inclusive.

13.7.5 Claims have been made against the DEPARTMENT or against the funds held by the DEPARTMENT on account of the CONTRACTOR's actions or inactions in performing this Contract, or there are other items entitling the DEPARTMENT to a set off.

13.7.6 Subsequently discovered evidence or the results of subsequent inspections or test, nullify any previous payments for reasons stated in subparagraphs 13.7.1 through 13.7.5.

13.7.7 The CONTRACTOR has failed to fulfill or is in violation of any of his obligations under any provision of this Contract.

13.8 Retainage:

At any time the DEPARTMENT finds that satisfactory progress is not being made it may in addition to the amounts withheld under 13.7 retain a maximum amount equal to 10% of the total amount earned on all subsequent progress payments. This retainage may be released at such time as the Contracting Officer finds that satisfactory progress is being made.

13.9 Request for Release of Funds:

If the CONTRACTOR believes the basis for withholding is invalid or no longer exists, immediate written notice of the facts and Contract provisions on which the CONTRACTOR relies, shall be given to the DEPARTMENT, together with a request for release of funds and adequate documentary evidence proving that the problem has been cured. In the case of withholding which has occurred at the request of the Department of Labor, the CONTRACTOR shall provide a letter from the Department of Labor stating that withholding is no longer requested. Following such a submittal by the CONTRACTOR, the DEPARTMENT shall have a reasonable time to investigate and verify the facts and seek additional assurances before determining whether release of withheld payments is justified.

13.10 Substantial Completion:

When the CONTRACTOR considers the Work ready for its intended use the CONTRACTOR shall notify the Contracting Officer in writing that the Work or a portion of Work which has been specifically identified in the Contract Documents is substantially complete (except for items specifically listed by the CONTRACTOR as incomplete) and request that the DEPARTMENT issue a certificate of Substantial Completion. Within a reasonable time thereafter, the Contracting Officer, the CONTRACTOR and appropriate Consultant(s) shall make an inspection of the Work to determine the status of completion. If the Contracting Officer does not consider the Work substantially complete, the Contracting Officer will notify the CONTRACTOR in writing giving the reasons therefor. If the Contracting Officer considers the Work substantially complete, the Contracting Officer will within fourteen days execute and deliver to the CONTRACTOR a certificate of Substantial Completion with tentative list of items to be completed or corrected. At the time of delivery of the certificate of Substantial Completion the Contracting Officer will deliver to the CONTRACTOR a written division of responsibilities pending Final Completion with respect to security, operation, safety, maintenance, heat, utilities, insurance and warranties which shall be consistent with the terms of the Contract Documents.

The DEPARTMENT shall be responsible for all DEPARTMENT costs resulting from the initial inspection and the first re-inspection, the CONTRACTOR shall pay all costs incurred by the DEPARTMENT resulting from re-

inspections, thereafter.

13.11 Access Following Substantial Completion:

The DEPARTMENT shall have the right to exclude the CONTRACTOR from the Work after the date of Substantial Completion, but the DEPARTMENT shall allow CONTRACTOR reasonable access to complete or correct items on the tentative list.

13.12 Final Inspection:

Upon written notice from the CONTRACTOR that the entire Work or an agreed portion thereof is complete, the Contracting Officer will make a final inspection with the CONTRACTOR and appropriate Consultant(s) and will notify the CONTRACTOR in writing of all particulars in which this inspection reveals that the Work is incomplete or Defective. The CONTRACTOR shall immediately take such measures as are necessary to remedy such deficiencies. The CONTRACTOR shall pay for all costs incurred by the DEPARTMENT resulting from re-inspections.

13.13 Final Completion and Application for Payment:

After the CONTRACTOR has completed all such corrections to the satisfaction of the Contracting Officer and delivered all schedules, guarantees, bonds, certificates of payment to all laborers, Subcontractors and Suppliers, and other documents - all as required by the Contract Documents; and after the Contracting Officer has indicated in writing that the Work has met the requirements for Final Completion, and subject to the provisions of paragraph 13.18, the CONTRACTOR may make application for final payment following the procedure for progress payments. The final Application for Payment shall be accompanied by all remaining certificates, warranties, guarantees, releases, affidavits, and other documentation required by the Contract Documents.

13.14 Final Payment:

13.14.1 If on the basis of the Contracting Officer's observation of the Work during construction and final inspection, and the Contracting Officer's review of the final Application for Payment and accompanying documentation - all as required by the Contract Documents; and the Contracting Officer is satisfied that the Work has been completed and the CONTRACTOR's other obligations under the Contract Documents have been fulfilled, the DEPARTMENT will process final Application for Payment. Otherwise, the Contracting Officer will return the Application for Payment to the CONTRACTOR, indicating in writing the reasons for refusing to process final payment, in which case the CONTRACTOR shall make the necessary corrections and resubmit the final Application for Payment.

13.14.2 If, through no fault of the CONTRACTOR, Final Completion of the Work is significantly delayed, the Contracting Officer shall, upon receipt of the CONTRACTOR's final Application for Payment, and without terminating the Contract, make payment of the balance due for that portion of the Work fully completed and accepted. If the remaining balance to be held by the DEPARTMENT for Work not fully completed or corrected is less than the retainage provided for in paragraph 13.9, and if bonds have been furnished as required in paragraph 5.1, the written consent of the Surety to the payment of the balance due for that portion of the Work fully completed and accepted shall be submitted by the CONTRACTOR to the DEPARTMENT with the application for such payment. Such payment shall be made under the terms and conditions governing final payment, except that it shall not constitute a waiver of claims.

13.15 Final Acceptance:

Following certification of payment of payroll and revenue taxes, and final payment to the CONTRACTOR, the DEPARTMENT will issue a letter of Final Acceptance, releasing the CONTRACTOR from further obligations under the Contract, except as provided in paragraph 13.17.

13.16 CONTRACTOR's Continuing Obligation:

The CONTRACTOR's obligation to perform and complete the Work and pay all laborers, Subcontractors, and materialmen in accordance with the Contract Documents shall be absolute. Neither any progress or final payment by the DEPARTMENT, nor the issuance of a certificate of Substantial Completion, nor any use or occupancy of the Work or any part thereof by the DEPARTMENT or Using Agency, nor any act of acceptance by the DEPARTMENT nor any failure to do so, nor any review and Approval of a Shop Drawing or sample submission, nor any correction of Defective Work by the DEPARTMENT will constitute an acceptance of Work not in accordance with the Contract Documents or a release of the CONTRACTOR's obligation to perform the Work in accordance with the Contract Documents.

When it is anticipated that restarting, testing, adjusting, or balancing of systems will be required following Final Acceptance and said requirements are noted in Section(s) 01650, such Work shall constitute a continuing obligation under the Contract.

13.17 Waiver of Claims by CONTRACTOR:

The making and acceptance of final payment will constitute a waiver of all claims by the CONTRACTOR against the DEPARTMENT other than those previously made in writing and still unsettled.

13.18 No Waiver of Legal Rights:

The DEPARTMENT shall not be precluded or be estopped by any payment, measurement, estimate, or certificate made either before or after the completion and acceptance of the Work and payment therefor, from showing the true amount and character of the Work performed and materials furnished by the CONTRACTOR, nor from showing that any payment, measurement, estimate or certificate is untrue or is incorrectly made, or that the Work or materials are Defective. The DEPARTMENT shall not be precluded or estopped, notwithstanding any such measurement, estimate, or certificate and payment in accordance therewith, from recovering from the CONTRACTOR or his Sureties, or both, such damages as it may sustain by reason of his failure to comply with requirements of the Contract Documents. Neither the acceptance by the DEPARTMENT, or any representative of the DEPARTMENT, nor any payment for or acceptance of the whole or any part of the Work, nor any extension of the Contract Time, nor any possession taken by the DEPARTMENT, shall operate as a waiver of any portion of the Contract or of any power herein reserved, or of any right to damages. A waiver by the DEPARTMENT of any breach of the Contract shall not be held to be a waiver of any other subsequent breach.

ARTICLE 14 - SUSPENSION OF WORK, DEFAULT AND TERMINATION

14.1 DEPARTMENT May Suspend Work:

14.1.1 The DEPARTMENT may, at any time, suspend the Work or any portion thereof by notice in writing to the CONTRACTOR. If the Work is suspended without cause the CONTRACTOR shall be allowed an increase in the Contract Price or an extension of the Contract Time, or both, directly attributable to any suspension if the CONTRACTOR makes an Approved claim therefor as provided in Article 15. However, no adjustment shall be made under this clause for any suspension, delay, or interruption to the extent that suspension is due to the fault or negligence of the CONTRACTOR, or that suspension is necessary for Contract compliance, or that performance would have been so suspended, delayed, or interrupted by any other cause, including the fault or negligence of the CONTRACTOR.

14.1.2 In case of suspension of Work, the CONTRACTOR shall be responsible for preventing damage to or loss of any of the Work already performed and of all materials whether stored on or off the site or Approved remote storage sites.

14.2 Default of Contract:

14.2.1 The Contracting Officer may give the CONTRACTOR and its surety a written Notice to Cure Default if the CONTRACTOR:

a. fails to begin work in the time specified,

b. fails to use sufficient resources to assure prompt completion of the work,

c. performs the work unsuitably or neglects or refuses to remove and replace rejected materials or work,

d. stops work,

e. fails to resume stopped work after receiving notice to do so,

f. becomes insolvent (except that if the CONTRACTOR declares bankruptcy, termination will be under Title 11 US Code 362 and/or 365. The CONTRACTOR'S bankruptcy does not relieve the surety of any obligations to assume the Contract and complete the work in a timely manner.

g. Allows any final judgment to stand against him unsatisfied for period of 60 days, or

h. Makes an assignment for the benefit of creditors without the consent of the Contracting Officer, or

i. Disregards Regulatory Requirements of any public body having jurisdiction, or

j. Otherwise violates in any substantial way any provisions of the Contract Documents, or

k. fails to comply with Contract minimum wage payments or civil rights requirements, or

l. is a party to fraud, deception, misrepresentation , or

m. for any cause whatsoever, fails to carry on the Work in an acceptable manner.

14.2.2 The Notice to Cure Default will detail the conditions determined to be in default, the time within which to cure the default and may, in the Contracting Officer's discretion, specify the actions necessary to cure the default. Failure to cure the delay, neglect or default within the time specified in the Contracting Officer's written notice to cure authorizes the DEPARTMENT to terminate the contract. The Contracting Officer may allow more time to cure than originally stated in the Notice to Cure Default if he deems it to be in the best interests of the DEPARTMENT. The DEPARTMENT will provide the CONTRACTOR or its surety with a written Notice of Default Termination that details the default and the failure to cure it.

14.2.3 If the CONTRACTOR or its Surety, within the time specified in the above notice of default, shall not proceed in accordance therewith, then the DEPARTMENT may, upon written notification from the Contracting Officer of the fact of such delay, neglect or default and the CONTRACTOR's failure to comply with such notice, have full power and authority without violating the Contract, to take the prosecution of the Work out of the hands of the CONTRACTOR. The DEPARTMENT may terminate the services of the CONTRACTOR, exclude the CONTRACTOR from the site and take possession of the Work and of all the CONTRACTOR's tools, appliances, construction equipment and machinery at the site and use the same to the full extent they could be

used by the CONTRACTOR (without liability to the CONTRACTOR for trespass or conversion), incorporate in the Work all materials and equipment stored at the site or for which the DEPARTMENT has paid the CONTRACTOR but which are stored elsewhere, and finish the Work as the DEPARTMENT may deem expedient. The DEPARTMENT may enter into an agreement for the completion of said Contract according to the terms and provisions thereof, or use such other methods that in the opinion of the Contracting Officer are required for the completion of said Contract in an acceptable manner.

14.2.4 The Contracting Officer may, by written notice to the CONTRACTOR and its Surety or its representative, transfer the employment of the Work from the CONTRACTOR to the Surety, or if the CONTRACTOR abandons the Work undertaken under the Contract, the Contracting Officer may, at its option with written notice to the Surety and without any written notice to the CONTRACTOR, transfer the employment for said Work directly to the Surety. The Surety shall submit its plan for completion of the Work, including any contracts or agreements with third parties for such completion, to the DEPARTMENT for approval prior to beginning completion of the Work. Approval of such contracts shall be in accordance with all applicable requirements and procedures for approval of subcontracts as stated in the Contract Documents.

14.2.5 After the notice of termination is issued, the DEPARTMENT may take over the work and complete it by contract or otherwise and may take possession of and use materials, appliances, equipment or plant on the work site necessary for completing the work.

14.2.6 Rather than taking over the work itself, the DEPARTMENT may transfer the obligation to perform the work from the CONTRACTOR to its surety. The surety must submit its plan for completion of the work, including any contracts or agreements with third parties for completion, to the DEPARTMENT for approval prior to beginning work. The surety must follow the Contract requirements for approval of subcontracts, except that the limitation on percent of work subcontracted will not apply.

14.2.7 On receipt of the transfer notice, the surety must take possession of all materials, tools, and appliances at the work site, employ an appropriate work force, and complete the Contract work, as specified. The Contract specifications and requirements shall remain in effect. However the DEPARTMENT will make subsequent Contract payments directly to the Surety for work performed under the terms of the Contract. The CONTRACTOR shall forfeit any right to claim for the same work or any part thereof. The CONTRACTOR shall not be entitled to receive any further balance of the amount to be paid under the Contract.

14.2.8 Upon receipt of the notice terminating the services of the CONTRACTOR, the Surety shall enter upon the premises and take possession of all materials, tools, and appliances thereon for the purpose of completing the Work included under the Contract and employ by contract or otherwise any person or persons to finish the Work and provide the materials therefore, without termination of the continuing full force and effect of this Contract. In case of such transfer of employment to the Surety, the Surety shall be paid in its own name on estimates covering Work subsequently performed under the terms of the Contract and according to the terms thereof without any right of the CONTRACTOR to make any claim for the same or any part thereof.

14.2.9 If the Contract is terminated for default, the CONTRACTOR and the Surety shall be jointly and severally liable for damages for delay as provided by paragraph 11.8, and for the excess cost of completion, and all costs and expenses incurred by the DEPARTMENT in completing the Work or arranging for completion of the Work, including but not limited to costs of assessing the Work to be done, costs associated with advertising, soliciting or negotiating for bids or proposals for completion, and other reprocurement costs. Following termination the CONTRACTOR shall not be entitled to receive any further balance of the amount to be paid under the Contract until the Work is fully finished and accepted, at which time if the unpaid balance exceeds the amount due the DEPARTMENT and any amounts due to persons for whose benefit the DEPARTMENT has withheld funds, such excess shall be paid by the DEPARTMENT to the CONTRACTOR. If the damages, costs, and expenses due the DEPARTMENT exceed the unpaid balance, the CONTRACTOR and its Surety shall pay the difference.

14.2.10 If, after notice of termination of the CONTRACTOR's right to proceed under the provisions of this clause, it is determined for any reason that the CONTRACTOR was not in default under the provisions of this clause, or that the delay was excusable under the provisions of this clause, or that termination was wrongful, the rights and obligations of the parties shall be determined in accordance with the clause providing for convenience termination.

14.3 **Rights or Remedies:**

Where the CONTRACTOR's services have been so terminated by the DEPARTMENT, the termination will not affect any rights or remedies of the DEPARTMENT against the CONTRACTOR then existing or which may thereafter accrue. Any retention or payment of moneys due the CONTRACTOR by the DEPARTMENT will not release the CONTRACTOR from liability.

14.4 **Convenience Termination:**

14.4.1 The performance of the Work may be terminated by the DEPARTMENT in accordance with this section in whole or in part, whenever, for any reason the Contracting Officer shall determine that such termination is in the best interest of the DEPARTMENT. Any such termination shall be effected by delivery to the CONTRACTOR of a Notice of Termination, specifying termination is for the convenience of the DEPARTMENT the extent to which performance of Work is terminated, and the date upon which such termination becomes effective.

14.4.2 Immediately upon receipt of a Notice of Termination and except as otherwise directed by the Contracting Officer, the CONTRACTOR shall:

a. Stop Work on the date and to the extent specified in the Notice of Termination;

b. Place no further orders or subcontracts for materials, services, or facilities except as may be necessary for completion of such portion of the Work as is not terminated;

c. Terminate all orders and subcontracts to the extent that they relate to the performance of Work terminated by the Notice of Termination;

d. With the written Approval of the Contracting Officer, to the extent he may require, settle all outstanding liabilities and all claims arising out of such termination of orders and subcontracts, the cost of which would be reimbursable, in whole, or in part, in accordance with the provisions of the Contract;

e. Submit to the Contracting Officer a list, certified as to quantity and quality, of any or all items of termination inventory exclusive of items the disposition of which had been directed or authorized by the Contracting Officer;

f. Transfer to the Contracting Officer the completed or partially completed record drawings, Shop Drawings, information, and other property which, if the Contract had been completed, would be required to be furnished to the DEPARTMENT;

g. Take such action as may be necessary, or as the Contracting Officer may direct, for the protection and preservation of the property related to the Contract which is in the possession of the CONTRACTOR and in which the DEPARTMENT has or may acquire any interest.

The CONTRACTOR shall proceed immediately with the performance of the above obligations.

14.4.3 When the DEPARTMENT orders termination of the Work effective on a certain date, all Work in place as of that date will be paid for in accordance with Article 13 of the Contract. Materials required for completion and on hand but not incorporated in the Work will be paid for at invoice cost plus 15% with materials becoming the property of the DEPARTMENT - or the CONTRACTOR may retain title to the materials and be paid an agreed upon lump sum. Materials on order shall be cancelled, and the DEPARTMENT shall pay reasonable factory cancellation charges with the option of taking delivery of the materials in lieu of payment of cancellation charges. The CONTRACTOR shall be paid 10% of the cost, freight not included, of materials cancelled, and direct expenses only for CONTRACTOR chartered freight transport which cannot be cancelled without charges, to the extent that the CONTRACTOR can establish them. The extra costs due to cancellation of bonds and insurance and that part of job start-up and phase-out costs not amortized by the amount of Work accomplished shall be paid by the DEPARTMENT. Charges for loss of profit or consequential damages shall not be recoverable except as provided above.

a. The following costs are not payable under a termination settlement agreement or Contracting Officer's determination of the termination claim:

1. Loss of anticipated profits or consequential or compensatory damages

2. Unabsorbed home office overhead (also termed "General & Administrative Expense") related to ongoing business operations

3. Bidding and project investigative costs

4. Direct costs of repairing equipment to render it operable for use on the terminated work

14.4.4 The termination claim shall be submitted promptly, but in no event later than 90 days from the effective date of termination, unless extensions in writing are granted by the Contracting Officer upon written request of the CONTRACTOR made within the 90-day period. Upon failure of the CONTRACTOR to submit his termination claim within the time allowed, the Contracting Officer may determine, on the basis of information available to him, the amount, if any, due to the CONTRACTOR by reason of the termination and shall thereupon pay to the CONTRACTOR the amount so determined.

14.4.5 The CONTRACTOR and the Contracting Officer may agree upon whole or any part of the amount or amounts to be paid to the CONTRACTOR by reason of the total or partial termination of Work pursuant to this section. The Contract shall be amended accordingly, and the CONTRACTOR shall be paid the agreed amount.

14.4.6 In the event of the failure of the CONTRACTOR and the Contracting Officer to agree in whole or in part, as provided heretofore, as to the amounts with respect to costs to be paid to the CONTRACTOR in connection with the termination of the Work the Contracting Officer shall determine, on the basis of information available to him, the amount, if any, due to the CONTRACTOR by reason of the termination and shall pay to the CONTRACTOR the amount determined as follows:

a. All costs and expenses reimbursable in accordance with the Contract not previously paid to the CONTRACTOR for the performance of the Work prior to the effective date of the Notice of Termination;

b. So far as not included under "a" above, the cost of settling and paying claims arising out of the termination of the Work under subcontracts or orders which are properly chargeable to the terminated portions of the Contract;

c. So far as practicable, claims by the CONTRACTOR for idled or stand-by equipment shall be made as follows: Equipment claims will be reimbursed as follows:

1. Contractor-owned equipment usage, based on the CONTRACTOR'S ownership and operating costs for each piece of equipment as determined from the CONTRACTOR'S accounting records. Under no circumstance, may the CONTRACTOR base equipment claims on published rental rates.

2. Idle or stand-by time for Contractor-owned equipment, based on the CONTRACTOR'S internal ownership and depreciation costs. Idle or stand-by equipment time is limited to the actual period of time equipment is idle or on stand-by as a direct result of the termination, not to exceed 30 days. Operating expenses will not be included for payment of idle or stand-by equipment time.

3. Rented equipment, based on reasonable, actual rental costs. Equipment leased under "capital leases" as defined in Financial Accounting Standard No. 13 will be considered Contractor-owned equipment. Equipment leased from an affiliate, division, subsidiary or other organization under common control with the CONTRACTOR will be considered Contractor-owned equipment, unless the lessor has an established record of leasing to unaffiliated lessees at competitive rates consistent with the rates the CONTRACTOR has agreed to pay and no more than forty percent of the lessor's leasing business, measured in dollars, is with organizations affiliated with the lessor.

14.4.7 The CONTRACTOR shall have the right of appeal under the DEPARTMENT's claim procedures, as defined in Article 15, for any determination made by the Contracting Officer, except if the CONTRACTOR has failed to submit his claim within the time provided and has failed to request extension of such time, CONTRACTOR shall have no such right of appeal. In arriving at the amount due the CONTRACTOR under this section, there shall be deducted:

a. All previous payments made to the CONTRACTOR for the performance of Work under the Contract prior to termination;

b. Any claim for which the DEPARTMENT may have against the CONTRACTOR;

c. The agreed price for, or the proceeds of sale of, any materials, supplies, or other things acquired by the

CONTRACTOR or sold pursuant to the provisions of this section and not otherwise recovered by or credited to the DEPARTMENT; and,

d. All progress payments made to the CONTRACTOR under the provisions of this section.

14.4.8 Where the Work has been terminated by the DEPARTMENT said termination shall not affect or terminate any of the rights of the DEPARTMENT against the CONTRACTOR or his Surety then existing or which may thereafter accrue because of such default. Any retention or payment of monies by the DEPARTMENT due to the CONTRACTOR under the terms of the Contract shall not release the CONTRACTOR or its Surety from liability.

14.4.9 The CONTRACTOR's termination claim may not include claims that pre dated the notice for termination for convenience. Those claims shall be prosecuted by the CONTRACTOR under Article 15.

14.4.10 The CONTRACTOR'S termination claim may not exceed the total dollar value of the contract as awarded plus agreed upon change orders less the amounts that have been paid for work completed.

a. Unless otherwise provided for in the Contract Documents, or by applicable statute, the CONTRACTOR, from the effective date of termination and for a period of three years after final settlement under this Contract, shall preserve and make available to the DEPARTMENT at all reasonable times at the office of the CONTRACTOR, all its books, records, documents, and other evidence bearing on the cost and expenses of the CONTRACTOR under his Contract and relating to the Work terminated hereunder.

b. Definitions. In this Subsection 108-1.09, the term "cost" and the term "expense" mean a monetary amount in U.S. Dollars actually incurred by the CONTRACTOR, actually reflected in its contemporaneously maintained accounting or other financial records and supported by original source documentation.

c. Cost Principles. The DEPARTMENT may use the federal cost principles at 48 CFR §§ 31.201-1 to 31.205-52 (or succeeding cost principles for fixed price contracts) as guidelines in determining allowable costs under this Subsection to the extent they are applicable to construction contracts and consistent with the specifications of this Contract. The provisions of this contract control where they are more restrictive than, or inconsistent with, these federal cost principles."

ARTICLE 15 - CLAIMS FOR ADJUSTMENT AND DISPUTES

15.1 Notification

15.1.1 The CONTRACTOR shall notify the DEPARTMENT in writing as soon as the CONTRACTOR becomes aware of any act or occurrence which may form the basis of a claim for additional compensation or an extension of Contract Time or of any dispute regarding a question of fact or interpretation of the Contract. The DEPARTMENT has no obligation to investigate any fact or occurrence that might form the basis of a claim or to provide any additional compensation or extension of Contract Time unless the CONTRACTOR has notified the DEPARTMENT in writing in a timely manner of all facts the CONTRACTOR believes form the basis for the claim.

15.1.2 If the CONTRACTOR believes that he is entitled to an extension of Contract Time, then the CONTRACTOR must state the contract section on which be basis his extension request, provide the DEPARTMENT with sufficient information to demonstrate that the CONTRACTOR has suffered excusable delay, and show the specific amount of time to which the CONTRACTOR is entitled. The DEPARTMENT will not grant an extension of Contract Time if the CONTRACTOR does not timely submit revised schedules under **Section 01310**.

15.1.3 If the matter is not resolved by agreement within 7 days, the CONTRACTOR shall submit an Intent to Claim, in writing, to the DEPARTMENT within the next 14 days.

15.1.4 If the CONTRACTOR believes additional compensation or time is warranted, then he must immediately begin keeping complete, accurate, and specific daily records concerning every detail of the potential claim including actual costs incurred. The CONTRACTOR shall provide the DEPARTMENT access to any such records and furnish the DEPARTMENT copies, if requested. Equipment costs must be based on the CONTRACTOR's internal rates for ownership, depreciation, and operating expenses and not on published rental rates. In computing damages, or costs claimed for a change order, or for any other claim against the DEPARTMENT for additional time, compensation or both, the CONTRACTOR must prove actual damages based on internal costs for equipment, labor or efficiencies. Total cost, modified total cost or jury verdict forms of presentation of damage claims are not permissible to show damages. Labor inefficiencies must be shown to actually have occurred and can be proven solely based on job records. Theoretical studies are not a permissible means of showing labor inefficiencies. Home office overhead will not be allowed as a component of any claim against the DEPARTMENT.

15.1.5 If the claim or dispute is not resolved by the DEPARTMENT, then the CONTRACTOR shall submit a written Claim to the Contracting Officer within 90 days after the CONTRACTOR becomes aware of the basis of the claim or should have known the basis of the claim, whichever is earlier. The Contracting Officer will issue written acknowledge of the receipt of the Claim.

15.1.6 The CONTRACTOR waives any right to claim if the DEPARTMENT was not notified properly or afforded the opportunity to inspect conditions or monitor actual costs or if the Claim is not filed on the date required.

15.2 Presenting the Claim

15.2.1 The Claim must include all of the following:

a. The act, event, or condition the claim is based on

b. The Contract provisions which apply to the claim and provide relief

c. The item or items of Contract work affected and how they are affected

d. The specific relief requested, including Contract Time if applicable, and the basis upon which it was calculated

e. A statement certifying that the claim is made in good faith, that the supporting cost and pricing data are accurate and complete to the best of your knowledge and belief, and that the amount requested accurately reflects the Contract adjustment which the CONTRACTOR believes is due.

15.3 Claim Validity, Additional Information, and DEPARTMENT's Action

15.3.1 The Claim, in order to be valid, must not only show that the CONTRACTOR suffered damages or delay but that it was caused by the act, event, or condition complained of and that the Contract provides entitlement to relief for such act, event, or condition.

15.3.2 The DEPARTMENT can make written request to the CONTRACTOR at any time for additional information relative to the Claim. The CONTRACTOR shall provide the DEPARTMENT the additional information within 30 days of receipt of such a request. Failure to furnish the additional information may be regarded as a waiver of the Claim.

15.4 Contracting Officer's Decision

The CONTRACTOR will be furnished the Contracting Officer's Decision within 90 days, unless the Contracting Officer requests additional information or gives the CONTRACTOR notice that the time for issuing a decision is being extended for a specified period under AS 36.30.620. The Contracting Officer's decision is final and conclusive unless, within 14 days of receipt of the decision, the CONTRACTOR delivers a Notice of Appeal to the Appeals Officer. Procedures for appeals are covered under AS 36.30.625 and AS 36.30.630.

15.5 Fraud and Misrepresentation in Making Claims

Criminal and Civil penalties authorized under AS 36.30.687 (including, but not limited to, forfeiture of all claimed amounts) may be imposed on the CONTRACTOR if the CONTRACTOR makes or uses a misrepresentation in support of a claim or defraud or attempt to defraud the DEPARTMENT at any stage of prosecuting a claim under this Contract.

INDEX TO GENERAL CONDITIONS

A

Article or Paragraph Number

B

C

D

E

F

G

I

L

M

N

O

P

R

S

T

U

V

W

SECTION 00800
SUPPLEMENTARY CONDITIONS
MODIFICATIONS TO THE GENERAL CONDITIONS
(STATE FUNDED CONTRACTS)

The following supplements modify, change, delete from, add to the "General Conditions of the Construction Contract for Buildings", revised December, 1987 (c) 4/96. Where any article of the General Conditions is modified, or and Paragraph, Subparagraph, or Clause thereof is modified or deleted by these Supplementary Conditions, the unaltered provisions of that Article, Paragraph, Subparagraph, of Clause shall remain in effect.

SC-1-DEFINITIONS

At General Conditions Article 1, add the following definitions:

"APPROVED. 'Approved' or 'Approval' as used in this contract document shall mean that the Department has received a document, form or submittal from the contractor and that the Department has taken "No exceptions" to the item submitted. Unless the context clearly indicates otherwise, approved or approval shall not mean that the Department approves of the methods or means, or that the item or form submitted meets the requirements of the contract or constitutes acceptance of the Contractor's work. Where approved or approval means acceptance, then such approval must be set forth in writing and signed by the contracting officer or his designee.

ARCHITECT. Where used in the contract documents, "ARCHITECT" shall mean the DEPARTMENT'S ENGINEER.

ARCHITECT/ENGINEER. Where used in the contract documents, "ARCHITECT/ENGINEER" shall mean the DEPARTMENT'S ENGINEER.

ENGINEER. The DEPARTMENT'S authorized representative of the Contracting Officer, as defined in the DEPARTMENT'S *delegation of authority letter* to be issued after notice-to-proceed, who is responsible for administration of the contract.

EQUIPMENT. All machinery together with the necessary supplies for upkeep and maintenance, and also tools and apparatus necessary for the proper construction and acceptable completion of the work.

FURNISH. To procure, transport, and deliver to the project site materials, labor, or equipment, for installation or use on the project.

INSPECTOR. The Engineer's authorized representative assigned to make detailed observations relating to contract performance.

INTERIM WORK AUTHORIZATION. A written order by the Engineer initiating changes to the Contract, within its general scope, until a subsequent Change Order is executed.

LABORATORY. The official testing laboratories of the DEPARTMENT or such other laboratories as may be designated by the Engineer or identified in the contract documents.

MATERIALS. Any substances specified for use in the construction of the project.

PRECONSTRUCTION CONFERENCE. A meeting between the CONTRACTOR and the Engineer, and other parties affected by the construction, to discuss the project before the CONTRACTOR begins work.

QUALITY ASSURANCE (QA). Where referred to in the technical specifications (Divisions 2 through 16), Quality Assurance refers to measures to be provided by the CONTRACTOR as specified.

QUALITY CONTROL (QC). Tests and inspections by the CONTRACTOR to insure the acceptability of materials incorporated into the work. QC test reports are used as a basis upon which to determine whether the Work conforms to the requirements of the Contract Documents and to determine its acceptability for payment.

TRAFFIC CONTROL PLAN (TCP). A drawing of one or more specific plans that detail the routing of pedestrian, and/or vehicular traffic through or around a construction area.

UTILITY. The privately, publicly or cooperatively owned lines, facilities and systems for producing, transmitting or distributing communications, power, electricity, light, heat, gas, oil, crude products, water, steam, waste, storm water not connected with highway or street drainage, and other similar commodities, including publicly owned fire and police signal systems, street lighting systems, and railroads which directly or indirectly serve the public or any part thereof. The term "utility" shall also mean the utility company, inclusive of any wholly owned or controlled subsidiary."

At General Conditions Article 1, definition of **Contract Time**, last sentence, Replace "…Final Completion…" with:

"…Substantial Completion…".

At General Conditions Article 1, definition of **Conditions of the Contract**: Delete the text of this definition in its entirety.

At General Conditions Article 1, definition of **Contract Time**: Delete the text of this definition and replace with the following:

"The number of Calendar Days following issuance of Notice-to-Proceed in which the project shall be rendered Substantially Complete, or if specified as a calendar date, the Substantial Completion date specified in the Contract Documents."

At General Conditions Article 1, definition of **Controlling Item**: Delete the text of this definition and replace with the following:

"Any feature of the Work on the critical path of a network schedule."

At General Conditions Article 1, definition of **Defective**: Delete the text of this definition and replace with the following:

"Work that is unsatisfactory, faulty or deficient, or does not conform to the Contract Documents."

At General Conditions Article 1, definition of **Effective Date of the Contract**: Delete the text of this definition in its entirety.

At General Conditions Article 1, definition **Shop Drawings**: Add the following text:

"Where used in the Contract Documents, "Shop Drawings" shall also mean "Submittals"."

At General Conditions Article 1, second paragraph: Delete this paragraph in its entirety and replace with the following:

"The titles and headings of the articles, sections, and subsections herein are intended for convenience of reference."

At General Conditions Article 1, third paragraph starting with "Whenever used in the Specifications….", Delete this paragraph in its entirety.

At General Conditions Article 1, fourth paragraph, last sentence: Revise it to read as follows:

"Words defined in Article 1 are to be interpreted as defined."

SC-2.1-AUTHORITIES AND LIMITATIONS

At General Conditions Article 2.1.1, delete this paragraph in its entirety and replace with the following:

> "The Contracting Officer alone, shall have the power to bind the DEPARTMENT and to exercise the rights, responsibilities, authorities and functions vested in the Contracting Officer by the Contract Documents. The Contracting Officer shall have the right to designate in writing authorized representatives to act for him. Wherever any provision of the Contract Documents specifies an individual or organization, whether governmental or private, to perform any act on behalf of or in the interest of the DEPARTMENT that individual or organization shall be deemed to be the Contracting Officer's authorized representative under this Contract but only to the extent so specified. "

At General Conditions Article 2.1.4 starting with "The term of "Contracting Officer" when used…", delete this article in its entirety.

SC-2.4-VISITS TO SITE/PLACE OF BUSINESS

At General Conditions Article 2.4, delete this article in its entirety.

SC-4.1-AVAILABILITY OF LANDS

At General Conditions Article 4.1, add the following:

> "The CONTRACTOR shall provide all waste and disposal areas, including disposal areas for hazardous or contaminated materials, at no additional cost to the DEPARTMENT."

SC-4.3-EXPLORATIONS AND REPORTS

Not Used

SC-4.7-SURVEY CONTROL

At General Conditions Article 4.7, delete the third sentence and substitute the following text:

> "Copies of all survey notes shall be provided to the DEPARTMENT at an interval determined by the Project Manager. The Project Manager may request submission on a weekly or longer period at his discretion. Any variations between the Contract Documents and actual field conditions shall be identified in the survey notes."

SC-5.2-BONDS

At General Condition Article 5.2, delete the second, third, fourth, fifth, and sixth paragraphs in their entirety.

SC-5.4.2-INSURANCE REQUIREMENTS, GENERAL

At General Condition Article 5.4.2, revise the first sentence to read as follows:

> "The CONTRACTOR shall maintain in force at all times during the performance of the work under this agreement the following policies and minimum limits of liability."

SC-5.4.2a-WORKMANS COMPENSATION INSURANCE

At General Condition Article 5.4.2a, replace paragraph "a" in its entirety and replace it with the following:

"a. Workers' Compensation Insurance: The Contractor shall provide and maintain, for all employees of the

Contractor engaged in work under this contract, Workers' Compensation Insurance as required by AS 23.30.045. The Contractor shall be responsible for Workers' Compensation Insurance for any subcontractor who provides services under this contract, to include:

1. Waiver of subrogation against the State and Employer's Liability Protection in the amount of $500,000 each accident/$500,000 each disease.

2. If the Contractor directly utilizes labor outside of the State of Alaska in the prosecution of the work, "Other States" endorsement shall be required as a condition of the contract.

3. Whenever the work involves activity on or about navigable waters, the Workers' Compensation policy shall contain a United States Longshoreman's and Harbor Worker's Act endorsement, and when appropriate, a Maritime Employer's Liability (Jones Act) endorsement with a minimum limit of $1,000,000."

SC-5.4b–COMPREHENSIVE GENERAL LIABILITY INSURANCE

At General Conditions Article 5.4b, delete minimum limits of liability items 1 and 2 in their entirety and substitute the following text:

"1. If the CONTRACTOR carries a *Comprehensive General Liability* policy, the limits of liability shall not be less than a Combined Single Limit for bodily injury, property damage and Personal Injury Liability of:

   $1,000,000 each occurrence
   $2,000,00 aggregate

2. If the CONTRATOR carries a *Commercial General Liability* policy, the limits of liability shall not be less than:

   $1,000,000 each occurrence (Combined Single Limit for bodily injury and property damage)
   $1,000,000 for Personal Injury Liability

   $2,000,000 aggregate for Products-Completed Operations
   $2,000,000 general aggregate

The State of Alaska, DEPARTMENT of Health & Social Services shall be named as an "Additional Insured" under all liability coverages listed above."

SC-5.4.2d-BUILDERS RISK INSURANCE – Not Applicable

SC-5.4.3-INSURANCE REQUIREMENTS, EVIDENCE OF INSURANCE

At General Conditions Article 5.4.3, delete this subsection and replace with the following:

"In addition to providing the above coverages the Contractor shall, in any contract or agreement with subcontractors performing work, require that all indemnities and waivers of subrogation it obtains, and that any stipulation to be named as an additional insured it obtains, also be extended to waive rights of subrogation against the State of Alaska and to add the State of Alaska as additional named indemnitee and as additional insured.

Evidence of insurance shall be furnished to the Department prior to the award of the contract. Such evidence, executed by the carrier's representative and issued to the Department, shall consist of a certificate of insurance or the policy declaration page with required endorsements attached thereto which denote the type, amount, class of operations covered, effective (and retroactive) dates, and dates of expiration. Acceptance by the Department of deficient evidence does not constitute a waiver of contract requirements.

When a certificate of insurance is furnished, it shall contain the following statement:
"This is to certify that the policies described herein comply with all aspects of the insurance requirements of (Project Name and Number)."

SC-6.6.1-PROGRESS SCHEDULE

At General Condition Article 6.6.1, change the phrase "Within reasonable time prior to the Pre-Construction Conference..." to read:

"Within seven days after the Pre-Construction Conference."

SC-6.6.2-SCHEDULE OF SHOP DRAWINGS AND SCHEDULE OF VALUES

At General Condition Article 6.6.2, change the phrase "Within fifteen days after the date of the Notice To Proceed,..." to read:

"Prior to submitting the CONTRACTOR's first Application for Payment..."

SC-6.9–SUBSTITUTES “OR EQUAL” ITEMS

Add the following article:

"6.9.5 - Substitutions shall be permitted during or after the bid period as allowed and in accordance with Document 00020 - Invitation for Bids, Document 00700 – General Conditions, and Document 01630 - Product Options and Substitutions."

SC-6.13.1-SUBCONTRACT PROVISIONS

At General Condition Article 6.13.1, delete the third sentence and add the following text:

"All subcontracts shall contain provisions for prompt payment, release of retainage, and interest on late payment amounts and retainage as specified in A.S. 36.90.210. Contracts between subcontractors, regardless of tier, must also contain these provisions."

SC-6.27-LOAD RESTRICTIONS

Add new General Conditions Article 6.27 as follows:

"6.27 Load Restrictions

The CONTRACTOR shall comply with all load restrictions as set forth in the "Administrative Permit Manual", and Title 17, Chapter 25, of the Alaska Administrative Code in the hauling of materials on public roads, beyond the limits of the project, and on all public roads within the project limits that are scheduled to remain in use upon completion of the project.

Overload permits may, at the discretion of the State, be issued for travel beyond the project limits for purposes of mobilization and/or demobilization. Issuance of such a permit will not relieve the CONTRACTOR of liability for damage which may result from the moving of equipment.

The operation of equipment of such weight or so loaded as to cause damage to any type of construction will not be permitted. No overloads will be permitted on the base course or surface course under construction. No loads will be permitted on a concrete pavement, base or structure before the expiration of the curing period. The CONTRACTOR shall be responsible for all damage done by his equipment."

SC-7.12-APPLICABLE ALASKA PREFERENCES

At General Condition Article 7.12.2, delete the last portion of the first sentence commencing at the words, "…when the bid documents designate…" and replace with the words:

> "…when the bidder designates the use of Alaska products. The Bidder shall complete the Alaska Products Preference Worksheet per its instructions and submit it with the Bid Proposal." Continue with existing second sentence.

SC-7.13-PREFERENTIAL EMPLOYMENT

At General Condition Article 7.13, delete the text of this article in its entirety.

SC-7.14.1-CERTIFIED PAYROLLS

At General Condition Article 7.14.1, add the following text:

> "Regardless of project funding source, copies of all certified payrolls supplied to the State DEPARTMENT of Labor by the CONTRACTOR shall be supplied also to the Project Manager upon request, including submittals made by, or on behalf of, subcontractors."

Add General Condition Article 7.14.3, as follows:

> "Within three calendar days of award of a construction contract, the CONTRACTOR shall file a "Notice of Work" with the Department of Labor and shall pay all related fees. The Contracting Officer will not issue Notice to Proceed to the CONTRACTOR until such notice and fees have been paid to the Department of Labor. Failure of the CONTRACTOR to file the Notice of Work and pay fees within this timeframe shall not constitute grounds for an extension of contract time or adjustment of contract price."

SC-7.16-COVENANT AGAINST CONTINGENT FEES

At General Conditions Article 7.16, delete the text of this article in its entirety.

SC-7.17-OFFICIALS NOT TO BENEFIT

At General Conditions Article 7.17, delete the text of this article in its entirety.

SC-7.18-PERSONAL LIABILITY OF PUBLIC OFFICIALS

At General Conditions Article 7.18, delete the text of this article in its entirety.

SC-9.4-CHANGE ORDER

At General Conditions Article 9.4, change the first sentence to read:

> "A change in Contract Time, Contract Price, or responsibility may be made for changes within the scope of the Work by Change Order."

At General Conditions Article 9.4, add the following sentence:

> "A Change Order shall be considered executed when it is signed by the DEPARTMENT."

SC-9.10-INTERIM WORK AUTHORIZATION

At General Conditions Article 9.10, add the following new paragraph:

"**9.10 Interim Work Authorization**

An Interim Work Authorization may be used to establish a change within the scope of the Work; however, only a Change Order shall establish associated changes in Contract Time and Price. Work authorized by Interim Work Authorization shall be converted to a Change Order. The basis of payment shall be as stated in the Interim Work Authorization, unless it states that the basis of payment has not been established and is to be negotiated, in which case the Cost of the Work shall be documented pursuant to Article 10.4, to establish a basis for negotiating a lump sum price for the Change Order."

SC-10.3.2–CHANGE ORDER PRICE DETERMINATION FOR LUMP SUM CHANGE ORDERS

At General Conditions Article 10.3.2, Delete this paragraph in its entirety and replace it with the following.

"10.3.2 By mutual acceptance of a lump sum price which includes overhead and profit. The following maximum rates of cost markup (to cover both overhead and profit of the CONTRACTOR) shall be used in the negotiation of a Lump Sum Change Order:

a. 17% - where a cost is borne directly by prime contractor (first tier contractor).

b. 10% - where a cost is borne by a subcontractor (lower tier contractor).

Where the cost is borne by a subcontractor acting as a first tier contractor, the allowable overhead and profit markup for lump sum change orders shall not exceed 17%. Any lower tier subcontractors, including the CONTRACTOR in this case, for whom the first tier subcontractor performs the work, shall be allowed an overhead and profit markup that does not exceed 10%.

SC-10.4-COST OF THE WORK

At General Conditions Article 10.4.1, replace the second sentence from the end of the paragraph with the following:

"Such employees shall include manual workers up through the level of foreman but shall not include general foremen, superintendents, and non-manual employees."

At General Conditions Article 10.4.2, replace the first sentence with the following:

"Cost of all materials and equipment furnished and incorporated or consumed in the Work, including costs of transportation and storage thereof, and Suppliers' field services required in connection therewith."

SC-10.4.5.c-COST OF THE WORK (SUPPLEMENTAL COSTS)

At General Condition Article 10.4.5.c, add the following:

"For any machinery or special equipment (other than small tools) which has been authorized by the Project Manager, the CONTRACTOR shall receive the rental rates in the current edition and appropriate volume of the "Rental Rate Blue Book for Construction Equipment", published by Dataquest, Inc., 1290 Ridder Park Drive, San Jose, CA 95131. Hourly rental rates shall be determined as follows:

The established hourly rental rate shall be equal to the adjusted monthly rate for the basic equipment plus the adjusted monthly rate for applicable attachments, both divided by 176, and multiplied by the area adjustment factor, plus the estimated hourly operating cost.

The adjusted monthly rate is that resulting from application of the rate adjustment formula in order to eliminate replacement cost allowances in machine depreciation and contingency cost allowances.

Attachments shall not be included unless required for the time and materials work.

For equipment not listed in The Blue Book, the CONTRACTOR shall receive a rental rate as agreed upon before such work is begun. If agreement cannot be reached, the DEPARTMENT reserves the right to establish a rate based on similar equipment in the Blue Book or prevailing commercial rates in the area.

These rates shall apply for equipment used during the CONTRACTOR's regular shift of 10 hours per day. Where the equipment is used more than 10 hours per day, either on the CONTRACTOR's normal work or on time and materials, and either on single or multiple shifts, an overtime rate, computed as follows, shall apply:

The hourly overtime rate shall be equal to the adjusted monthly rate for the basic equipment plus the adjusted monthly rate for applicable attachments, both divided by 352, and multiplied by the area adjustment factor, plus the estimated hourly operating cost.

Equipment which must be rented or leased specifically for work required under this section shall be authorized in writing by the Project Manager. The CONTRACTOR shall be paid invoice price plus 15%.

When it is necessary to obtain equipment from sources beyond the project limits exclusively for time and materials, work, the actual cost of transferring the equipment to the site of the work and return will be allowed as an additional item of expense. Where the move is made by common carrier, the move-in allowance will be limited to the amount of the freight bill or invoice. If the CONTRACTOR hauls the equipment with his own forces, the allowance will be limited to the rental rate for the hauling unit plus operator wages. In the event that the equipment is transferred under its own power, the moving allowance will be limited to one-half of the normal hourly rental rate plus operator's wages. In the event that the move-out is to a different location, payment will in no instance exceed the amount of the move-in. Move-in allowance shall not be made for equipment brought to the project for time and materials work which is subsequently retained on the project and utilized for completion of contract items, camp maintenance, or related work.

Equipment ordered to be on a stand-by basis shall be paid for at the stand-by rental rate for the number of hours in the CONTRACTOR'S normal work shift, but not to exceed 8 hours per day. The stand-by rental rate shall be computed as follows:

The hourly stand-by rate shall be equal to the adjusted monthly rate for the basic equipment plus the adjusted monthly rate for applicable attachments, both divided by 352, all multiplied by the area adjustment factor.

Time will be recorded to the nearest one-quarter hour for purposes of computing compensation to the CONTRACTOR for equipment utilized under these rates.

The equipment rates as determined above shall be full compensation, including overhead and profit, for providing the required equipment and no additional compensation will be made for other costs such as, but not limited to, fuels, lubricants, replacement parts or maintenance costs. Cost of repairs, both major and minor, as well as charges for mechanic's time utilized in servicing equipment to ready it for use prior to moving to the project and similar charges will not be allowed."

SC-10.11-DISADVANTAGED BUSINESSS ENTERPRISE PROGRAM

At General Conditions Article 10.11, Delete this paragraph in its entirety for this State Funded Contract.

SC-11.3–COMPUTATION OF CONTRACT TIME

At General Condition Article 11.3.1, third sentence, change "…the date of Final Completion…" to:

"…the date of Substantial Completion…"

At General Condition Article 11.3.2, first sentence, change "…the date of Final Completion…" to:

"…the date of Substantial Completion."

Add General Condition Article 11.3.3, to state as follows:

" The Contract Time shall be as stated on form 25D-9, Proposal."

SC-11.8-DELAY DAMAGES

At General Condition Article 11.8, add the following:

"For each calendar day that the work remains incomplete after the expiration of the Contract Time, liquidated damages in the amount of $500 per calendar day shall be assessed to the CONTRACTOR. If no money is due the CONTRACTOR, the DEPARTMENT shall have the right to recover said sum from the CONTRACTOR, the surety or both. The amount of these deductions is to reimburse the DEPARTMENT for estimated liquidated damages incurred as a result of the CONTRACTOR's failure to complete the work within the time specified. As liquidated damages, such deductions are not to be considered as penalties.

Permitting the CONTRACTOR to continue and finish the work or any part of it after the time fixed for its completion, or after the date to which the time for completion may have been extended, will in no way operate as a waiver on the part of the DEPARTMENT of any of its rights under the Contract."

SC 12-ONE YEAR CORRECTION PERIOD

At General Condition Article 12.7, in the first sentence, change the phrase " Final Completion" to:

"Substantial Completion of the relevant portion of the Work…"

SC 13.3–APPLICATION FOR PROGRESS PAYMENT

At General Conditions Article 13.3, revise the last sentence to read as follows:

"Progress payments will be made as the Work progresses on a monthly basis."

SC 13.13–FINAL COMPLETION AND APPLICATION FOR PAYMENT

At General Conditions Article 13.13, first sentence, delete the following items:

"maintenance and operating instructions
certificates of inspection
marked up record documents"

The preceding items are some of the requirements for Substantial Completion, as addressed in Section 01701.

SC 13.16–CONTRACTOR'S CONTINUING OBLIGATION

At General Condition Article 13.16, add the following paragraph:

"When it is anticipated that restarting, testing, adjusting, or balancing of systems will be required following Final Acceptance and said requirements are noted in Section(s) 01650, such Work shall constitute a continuing obligation under the Contract."

SC 14.2–DEFAULT OF CONTRACT

At General Conditions Article 14.2, delete this section in its entirety and replace with the following:

"14.2.1 The Contracting Officer may give the contractor and his surety a written Notice to Cure

Default if the contractor:

a. fails to begin work in the time specified,

b. fails to use sufficient resources to assure prompt completion of the work,

c. performs the work unsuitably or neglect or refuse to remove and replace rejected materials or work,

d. stops work,

e. fails to resume stopped work after receiving notice to do so,

f. becomes insolvent (except that if you declare bankruptcy, termination will be under Title 11 US Code 362 and/or 365. Your bankruptcy does not relieve the surety of any obligations to assume the Contract and complete the work in a timely manner.

g. Allows any final judgment to stand against him unsatisfied for period of 60 days, or

h. Makes an assignment for the benefit of creditors without the consent of the Contracting Officer, or

i. Disregards Regulatory Requirements of any public body having jurisdiction, or

j. Otherwise violates in any substantial way any provisions of the Contract Documents, or

k. fails to comply with Contract minimum wage payments or civil rights requirements, or

l. are party to fraud, deception, misrepresentation , or

m. for any cause whatsoever, fails to carry on the Work in an acceptable manner.

14.2.2 The Notice to Cure Default will detail the conditions determined to be in default, the time within which to cure the default and may, in the Contracting Officer's discretion, specify the actions necessary to cure the default. Failure to cure the delay, neglect or default within the time specified in the Contracting Officer's written notice to cure authorizes the Department to terminate the contract. The Contracting Officer may allow more time to cure than originally stated in the Notice to Cure Default if he deems it to be in the best interests of the Department. The Department will provide you and your surety with a written Notice of Default Termination that details the default and the failure to cure it.

14.2.3 If the CONTRACTOR or Surety, within the time specified in the above notice of default, shall not proceed in accordance therewith, then the DEPARTMENT may, upon written notification from the Contracting Officer of the fact of such delay, neglect or default and the CONTRACTOR's failure to comply with such notice, have full power and authority without violating the Contract, to take the prosecution of the Work out of the hands of the CONTRACTOR. The DEPARTMENT may terminate the services of the CONTRACTOR, exclude the CONTRACTOR from the site and take possession of the Work and of all the CONTRACTOR's tools, appliances, construction equipment and machinery at the site and use the same to the full extent they could be used by the CONTRACTOR (without liability to the CONTRACTOR for trespass or conversion), incorporate in the Work all materials and equipment stored at the site or for which the DEPARTMENT has paid the CONTRACTOR but which are stored elsewhere, and finish the Work as the DEPARTMENT may deem expedient. The DEPARTMENT may enter into an agreement for the completion of said Contract according to the terms and provisions thereof, or use such other methods that in the opinion of the Contracting Officer are required for the completion of said Contract in an acceptable manner.

14.2.4 The Contracting Officer may, by written notice to the CONTRACTOR and his Surety or his representative, transfer the employment of the Work from the CONTRACTOR to the Surety, or if the CONTRACTOR abandons the Work undertaken under the Contract, the Contracting Officer may, at his option with written notice to the Surety and without any written notice to the CONTRACTOR, transfer the employment for said Work directly to the Surety. The Surety

shall submit its plan for completion of the Work, including any contracts or agreements with third parties for such completion, to the DEPARTMENT for Approval prior to beginning completion of the Work. Approval of such contracts shall be in accordance with all applicable requirements and procedures for Approval of subcontracts as stated in the Contract Documents.

14.2.5 After the notice of termination is issued, the Department may take over the work and complete it by contract or otherwise and may take possession of and use materials, appliances, equipment or plant on the work site necessary for completing the work.

14.2.6 Rather than taking over the work itself, the Department may transfer the obligation to perform the work from the contractor to your surety. The surety must submit its plan for completion of the work, including any contracts or agreements with third parties for completion, to the Department for approval prior to beginning work. The surety must follow the Contract requirements for approval of subcontracts, except that the limitation on percent of work subcontracted will not apply.

14.2.7 On receipt of the transfer notice, the surety must take possession of all materials, tools, and appliances at the work site, employ an appropriate work force, and complete the Contract work, as specified. The Contract specifications and requirements shall remain in effect. However the Department will make subsequent Contract payments directly to the Surety for work performed under the terms of the Contract. You forfeit any right to claim for the same work or any part thereof. You are not entitled to receive any further balance of the amount to be paid under the Contract.

14.2.8 Upon receipt of the notice terminating the services of the CONTRACTOR, the Surety shall enter upon the premises and take possession of all materials, tools, and appliances thereon for the purpose of completing the Work included under the Contract and employ by contract or otherwise any person or persons to finish the Work and provide the materials therefor, without termination of the continuing full force and effect of this Contract. In case of such transfer of employment to the Surety, the Surety shall be paid in its own name on estimates covering Work subsequently performed under the terms of the Contract and according to the terms thereof without any right of the CONTRACTOR to make any claim for the same or any part thereof.

14.2.9 If the Contract is terminated for default, the CONTRACTOR and the Surety shall be jointly and severally liable for damages for delay as provided by paragraph 11.8, and for the excess cost of completion, and all costs and expenses incurred by the DEPARTMENT in completing the Work or arranging for completion of the Work, including but not limited to costs of assessing the Work to be done, costs associated with advertising, soliciting or negotiating for bids or proposals for completion, and other reprocurement costs. Following termination the CONTRACTOR shall not be entitled to receive any further balance of the amount to be paid under the Contract until the Work is fully finished and accepted, at which time if the upaid balance exceeds the amount due the DEPARTMENT and any amounts due to persons for whose benefit the DEPARTMENT has withheld funds, such excess shall be paid by the DEPARTMENT to the CONTRACTOR. If the damages, costs, and expenses due the DEPARTMENT exceed the unpaid balance, the CONTRACTOR and his Surety shall pay the difference.

14.2.10 If, after notice of termination of the CONTRACTOR's right to proceed under the provisions of this clause, it is determined for any reason that the CONTRACTOR was not in default under the provisions of this clause, or that the delay was excusable under the provisions of this clause, or that termination was wrongful, the rights and obligations of the parties shall be determined in accordance with the clause providing for convenience termination.

14.3 Rights or Remedies:

Where the CONTRACTOR's services have been so terminated by the DEPARTMENT, the termination will not affect any rights or remedies of the DEPARTMENT against the CONTRACTOR then existing or which may thereafter accrue. Any retention or payment of

moneys due the CONTRACTOR by the DEPARTMENT will not release the CONTRACTOR from liability.

14.4 Convenience Termination:

14.4.1 The performance of the Work may be terminated by the DEPARTMENT in accordance with this section in whole or in part, whenever, for any reason the Contracting Officer shall determine that such termination is in the best interest of the DEPARTMENT. Any such termination shall be effected by delivery to the CONTRACTOR of a Notice of Termination, specifying termination is for the convenience of the DEPARTMENT the extent to which performance of Work is terminated, and the date upon which such termination becomes effective.

14.4.2 Immediately upon receipt of a Notice of Termination and except as otherwise directed by the Contracting Officer, the CONTRACTOR shall:

a. Stop Work on the date and to the extent specified in the Notice of Termination;

b. Place no further orders or subcontracts for materials, services, or facilities except as may be necessary for completion of such portion of the Work as is not terminated;

c. Terminate all orders and subcontracts to the extent that they relate to the performance of Work terminated by the Notice of Termination;

d. With the written Approval of the Contracting Officer, to the extent he may require, settle all outstanding liabilities and all claims arising out of such termination of orders and subcontracts, the cost of which would be reimbursable, in whole, or in part, in accordance with the provisions of the Contract;

e. Submit to the Contracting Officer a list, certified as to quantity and quality, of any or all items of termination inventory exclusive of items the disposition of which had been directed or authorized by the Contracting Officer;

f. Transfer to the Contracting Officer the completed or partially completed record drawings, Shop Drawings, information, and other property which, if the Contract had been completed, would be required to be furnished to the DEPARTMENT;

g. Take such action as may be necessary, or as the Contracting Officer may direct, for the protection and preservation of the property related to the Contract which is in the possession of the CONTRACTOR and in which the DEPARTMENT has or may acquire any interest.

The CONTRACTOR shall proceed immediately with the performance of the above obligations.

14.4.3 When the DEPARTMENT orders termination of the Work effective on a certain date, all Work in place as of that date will be paid for in accordance with Article 13 of the Contract. Materials required for completion and on hand but not incorporated in the Work will be paid for at invoice cost plus 15 % with materials becoming the property of the DEPARTMENT - or the CONTRACTOR may retain title to the materials and be paid an agreed upon lump sum. Materials on order shall be cancelled, and the DEPARTMENT shall pay reasonable factory cancellation charges with the option of taking delivery of the materials in lieu of payment of cancellation charges. The CONTRACTOR shall be paid 10% of the cost, freight not included, of materials cancelled, and direct expenses only for CONTRACTOR chartered freight transport which cannot be cancelled without charges, to the extent that the CONTRACTOR can establish them. The extra costs due to cancellation of bonds and insurance and that part of job start-up and phase-out costs not amortized by the amount of Work accomplished shall be paid by the DEPARTMENT. Charges for loss of profit or consequential damages shall not be recoverable except as provided above.

a. The following costs are not payable under a termination settlement agreement or Contracting Officer's determination of the termination claim:

1. Loss of anticipated profits or consequential or compensatory damages
2. Unabsorbed home office overhead (also termed “General & Administrative Expense”) related to ongoing business operations
3. Bidding and project investigative costs
4. Direct costs of repairing equipment to render it operable for use on the terminated work

14.4.4 The termination claim shall be submitted promptly, but in no event later than 90 days from the effective date of termination, unless extensions in writing are granted by the Contracting Officer upon written request of the CONTRACTOR made within the 90 day period. Upon failure of the CONTRACTOR to submit his termination claim within the time allowed, the Contracting Officer may determine, on the basis of information available to him, the amount, if any, due to the CONTRACTOR by reason of the termination and shall thereupon pay to the CONTRACTOR the amount so determined.

14.4.5 The CONTRACTOR and the Contracting Officer may agree upon whole or any part of the amount or amounts to be paid to the CONTRACTOR by reason of the total or partial termination of Work pursuant to this section. The Contract shall be amended accordingly, and the CONTRACTOR shall be paid the agreed amount.

14.4.6 In the event of the failure of the CONTRACTOR and the Contracting Officer to agree in whole or in part, as provided heretofore, as to the amounts with respect to costs to be paid to the CONTRACTOR in connection with the termination of the Work the Contracting Officer shall determine, on the basis of information available to him, the amount, if any, due to the CONTRACTOR by reason of the termination and shall pay to the CONTRACTOR the amount determined as follows:

a. All costs and expenses reimbursable in accordance with the Contract not previously paid to the CONTRACTOR for the performance of the Work prior to the effective date of the Notice of Termination;

b. So far as not included under "a" above, the cost of settling and paying claims arising out of the termination of the Work under subcontracts or orders which are properly chargeable to the terminated portions of the Contract;

c. So far as practicable, claims by the contractor for idled or stand-by equipment shall be made as follows: Equipment claims will be reimbursed as follows:

1. Contractor-owned equipment usage, based on the contractor’s ownership and operating costs for each piece of equipment as determined from the contractor’s accounting records. Under no circumstance, may the contractor base equipment claims on published rental rates.
2. Idle or stand-by time for Contractor-owned equipment, based on your internal ownership and depreciation costs. Idle or stand-by equipment time is limited to the actual period of time equipment is idle or on stand-by as a direct result of the termination, not to exceed 30 days. Operating expenses will not be included for payment of idle or stand-by equipment time.
3. Rented equipment, based on reasonable, actual rental costs. Equipment leased under “capital leases” as defined in Financial Accounting Standard No. 13 will be considered Contractor-owned equipment. Equipment leased from an affiliate, division, subsidiary or other organization under common control with you will be considered Contractor-owned equipment, unless the lessor has an established record of leasing to unaffiliated lessees at competitive rates consistent with the rates you have agreed to pay and no more than forty percent of the lessor’s leasing business, measured in dollars, is with organizations affiliated with the lessor.

14.4.7 The CONTRACTOR shall have the right of appeal under the DEPARTMENT's claim procedures, as defined in Article 15, for any determination made by the Contracting Officer,

except if the CONTRACTOR has failed to submit his claim within the time provided and has failed to request extension of such time, CONTRACTOR shall have no such right of appeal. In arriving at the amount due the CONTRACTOR under this section, there shall be deducted:

a. All previous payments made to the CONTRACTOR for the performance of Work under the Contract prior to termination;

b. Any claim for which the DEPARTMENT may have against the CONTRACTOR;

c. The agreed price for, or the proceeds of sale of, any materials, supplies, or other things acquired by the CONTRACTOR or sold pursuant to the provisions of this section and not otherwise recovered by or credited to the DEPARTMENT; and,

d. All progress payments made to the CONTRACTOR under the provisions of this section.

14.4.8 Where the Work has been terminated by the DEPARTMENT said termination shall not affect or terminate any of the rights of the DEPARTMENT against the CONTRACTOR or his Surety then existing or which may thereafter accrue because of such default. Any retention or payment of monies by the DEPARTMENT due to the CONTRACTOR under the terms of the Contract shall not release the CONTRACTOR or his Surety from liability.

14.4.9 The contractor's termination claim may not include claims that pre dated the notice for termination for convenience. Those claims shall be prosecuted by the contractor under Article 15.

14.4.10 The contractor's termination claim may not exceed the total dollar value of the contract as awarded plus agreed upon change orders less the amounts that have been paid for work completed.

a. Unless otherwise provided for in the Contract Documents, or by applicable statute, the CONTRACTOR, from the effective date of termination and for a period of three years after final settlement under this Contract, shall preserve and make available to the DEPARTMENT at all reasonable times at the office of the CONTRACTOR, all its books, records, documents, and other evidence bearing on the cost and expenses of the CONTRACTOR under his Contract and relating to the Work terminated hereunder.

b. Definitions. In this Subsection 108-1.09, the term "cost" and the term "expense" mean a monetary amount in U.S. Dollars actually incurred by you, actually reflected in your contemporaneously maintained accounting or other financial records and supported by original source documentation.

c. Cost Principles. The Department may use the federal cost principles at 48 CFR §§ 31.201-1 to 31.205-52 (or succeeding cost principles for fixed price contracts) as guidelines in determining allowable costs under this Subsection to the extent they are applicable to construction contracts and consistent with the specifications of this Contract. The provisions of this contract control where they are more restrictive than, or inconsistent with, these federal cost principles."

SC-15–CLAIMS AND DISPUTES

At General Conditions Article 15 – Claims and Disputes, delete this section in its entirety and substitute the following text:

"ARTICLE 15 - CLAIMS FOR ADJUSTMENT AND DISPUTES

15.1 Notification

15.1.1 The CONTRACTOR shall notify the DEPARTMENT in writing as soon as the CONTRACTOR becomes aware of any act or occurrence which may form the basis of a claim for additional compensation or an extension of Contract Time or of any dispute regarding a question of fact or interpretation of the Contract. The DEPARTMENT has no obligation to investigate any fact or occurrence that might form the basis of a claim or to provide any additional compensation

or extension of Contract Time unless the CONTRACTOR has notified the DEPARTMENT in writing in a timely manner of all facts the CONTRACTOR believes form the basis for the claim.

15.1.2 If the CONTRACTOR believes that he is entitled to an extension of Contract Time, then the CONTRACTOR must state the contract section on which he basis his extension request, provide the DEPARTMENT with sufficient information to demonstrate that the CONTRACTOR has suffered excusable delay, and show the specific amount of time to which the CONTRACTOR is entitled. The DEPARTMENT will not grant an extension of Contract Time if the CONTRACTOR does not timely submit revised schedules under **Section 01310**.

15.1.3 If the matter is not resolved by agreement within 7 days, the CONTRACTOR shall submit an Intent to Claim, in writing, to the DEPARTMENT within the next 14 days.

15.1.4 If the CONTRACTOR believes additional compensation or time is warranted, then he must immediately begin keeping complete, accurate, and specific daily records concerning every detail of the potential claim including actual costs incurred. The CONTRACTOR shall provide the DEPARTMENT access to any such records and furnish the DEPARTMENT copies, if requested. Equipment costs must be based on the CONTRACTOR's internal rates for ownership, depreciation, and operating expenses and not on published rental rates. In computing damages, or costs claimed for a change order, or for any other claim against the Department for additional time, compensation or both, the contractor must prove actual damages based on internal costs for equipment, labor or efficiencies. Total cost, modified total cost or jury verdict forms of presentation of damage claims are not permissible to show damages. Labor inefficiencies must be shown to actually have occurred and can be proven solely based on job records. Theoretical studies are not a permissible means of showing labor inefficiencies. Home office overhead will not be allowed as a component of any claim against the Department.

15.1.5 If the claim or dispute is not resolved by the DEPARTMENT, then the CONTRACTOR shall submit a written Claim to the Contracting Officer within 90 days after the CONTRACTOR becomes aware of the basis of the claim or should have known the basis of the claim, whichever is earlier. The Contracting Officer will issue written acknowledge of the receipt of the Claim.

15.1.6 The CONTRACTOR waives any right to claim if the DEPARTMENT was not notified properly or afforded the opportunity to inspect conditions or monitor actual costs or if the Claim is not filed on the date required.

15.2 Presenting the Claim

15.2.1 The Claim must include all of the following:

a. The act, event, or condition the claim is based on

b. The Contract provisions which apply to the claim and provide relief

c. The item or items of Contract work affected and how they are affected

d. The specific relief requested, including Contract Time if applicable, and the basis upon which it was calculated

e. A statement certifying that the claim is made in good faith, that the supporting cost and pricing data are accurate and complete to the best of your knowledge and belief, and that the amount requested accurately reflects the Contract adjustment which the CONTRACTOR believes is due.

15.3 Claim Validity, Additional Information, and DEPARTMENT's Action

15.3.1 The Claim, in order to be valid, must not only show that the CONTRACTOR suffered damages or delay but that it was caused by the act, event, or condition complained of and that the Contract provides entitlement to relief for such act, event, or condition.

15.3.2 The DEPARTMENT can make written request to the CONTRACTOR at any time for additional information relative to the Claim. The CONTRACTOR shall provide the DEPARTMENT the additional information within 30 days of receipt of such a request. Failure to furnish the additional information may be regarded as a waiver of the Claim.

15.4 Contracting Officer's Decision

The CONTRACTOR will be furnished the Contracting Officer's Decision within 90 days, unless the Contracting Officer requests additional information or gives the CONTRACTOR notice that the time for issuing a decision is being extended for a specified period under AS 36.30.620. The Contracting Officer's decision is final and conclusive unless, within 14 days of receipt of the decision, the CONTRACTOR delivers a Notice of Appeal to the Appeals Officer. Procedures for appeals are covered under AS 36.30.625 and AS 36.30.630.

15.5 Fraud and Misrepresentation in Making Claims

Criminal and Civil penalties authorized under AS 36.30.687 (including, but not limited to, forfeiture of all claimed amounts) may be imposed on the CONTRACTOR if the CONTRACTOR makes or uses a misrepresentation in support of a claim or defraud or attempt to defraud the DEPARTMENT at any stage of prosecuting a claim under this Contract."

END OF SECTION

THIS PAGE INTENTIONALLY LEFT BLANK

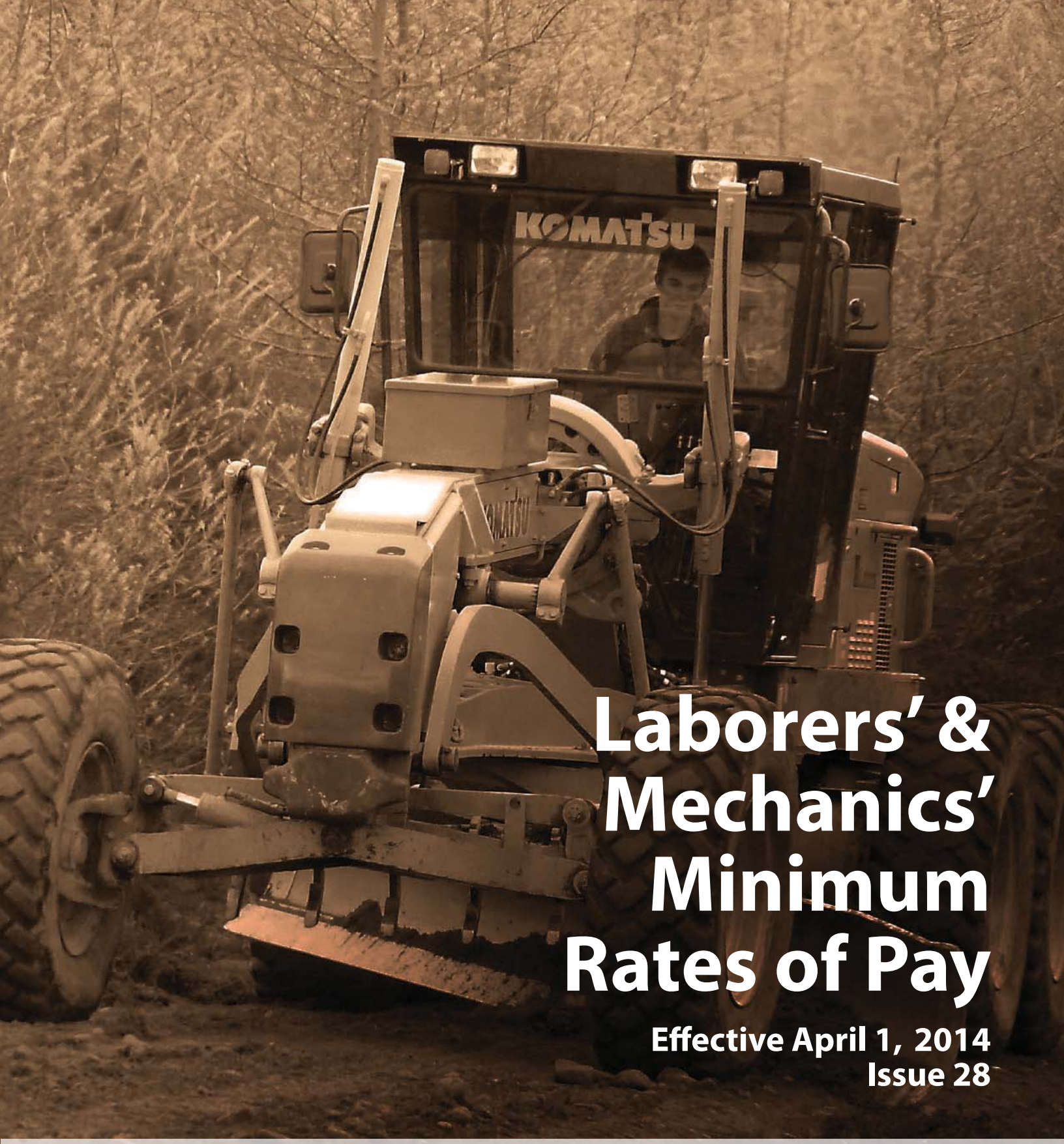

Laborers' & Mechanics' Minimum Rates of Pay

Effective April 1, 2014
Issue 28

Title 36. Public Contracts
AS 36.05 & AS 36.10
Wage & Hour Administration
Pamphlet No. 600

jobs
ALASKA DEPARTMENT OF LABOR
& WORKFORCE DEVELOPMENT

THE STATE of ALASKA
GOVERNOR SEAN PARNELL

Department of Labor and Workforce Development

Office of the Commissioner

Post Office Box 111149
Juneau, Alaska 99811
Main: 907.465.2700
fax: 907.465-2784

April 1, 2014

TO ALL CONTRACTING AGENCIES:

At the Alaska Department of Labor and Workforce Development, our goal is putting Alaskans to work. This pamphlet is designed to help contractors awarded public construction contracts understand the most significant laws of the State of Alaska pertaining to prevailing wage and resident hire requirements.

This pamphlet identifies current prevailing wage rates and resident hire classifications for public construction contracts (any construction projects awarded by the State of Alaska or its political subdivisions, such as local governments and certain non-profit organizations).

Because these rates may change, this publication is printed in the spring and fall of every year, so please be sure you are using the appropriate rates. The rates published in this edition become effective April 1, 2014.

All projects with a final bid date of April 11, 2014, or later, must pay the prevailing wage rates contained in this pamphlet. As the law now provides, these rates will remain stable during the life of a contract or for 24 calendar months, whichever is shorter. **The date the prime contract is awarded is the date from which the 24 months will be counted.** Upon expiration of the initial 24-month period, the latest wage rates issued by the department shall become effective for a subsequent 24-month period or until the original contract is completed, whichever occurs first. This process shall be repeated until the original contract is completed.

The term "original contract", as used herein, means the signed contract that resulted from the original bid and any amendments, including changes of work scope, additions, extensions, change orders, and other instruments agreed to by the parties that have not been subject to subsequent open bid procedures.

If a higher federal rate is required due to partial federal funding or other federal participation, the higher rate must be paid.

For additional copies of this pamphlet, contact the nearest office of the Division of Labor Standards and Safety, Wage and Hour office or visit the Internet site at:

http://labor.state.ak.us/lss/pamp600.htm

For questions regarding prevailing wage or resident hire requirements, please contact the nearest Wage and Hour office. These offices are listed on Page xi.

Sincerely,

Dianne Blumer

Dianne Blumer
Commissioner

Table of Contents

Excerpts from Alaska Law

Additional Information

Note to Readers: The statutes and administrative regulations listed in this publication were taken from the official codes, as of the effective date of the publication. However, there may be errors or omissions that have not been identified and changes that occurred after the publication was printed. This publication is intended as an informational guide only and is not intended to serve as a precise statement of the statutes and regulations of the State of Alaska. To be certain of the current laws and regulations, please refer to the official codes.

On the cover: Road Grader
Photo by flickr user Duncan Brown

EXCERPTS FROM ALASKA LAW

(The following statute (36.05.005) applies to projects bid on or after October 20, 2011)

Sec. 36.05.005. Applicability.

This chapter applies only to a public construction contract that exceeds $25,000.

Sec. 36.05.010. Wage rates on public construction.

A contractor or subcontractor who performs work on a public construction contract in the state shall pay not less than the current prevailing rate of wages for work of a similar nature in the region in which the work is done. The current prevailing rate of wages is that contained in the latest determination of prevailing rate of wages issued by the Department of Labor and Workforce Development at least 10 days before the final date for submission of bids for the contract. The rate shall remain in effect for the life of the contract or for 24 calendar months, whichever is shorter. At the end of the initial 24-month period, if new wage determinations have been issued by the department, the latest wage determination shall become effective for the next 24-month period or until the contract is completed, whichever occurs first. This process shall be repeated until the contract is completed.

Sec. 36.05.040. Filing schedule of employees, wages paid, and other information.

All contractors or subcontractors who perform work on a public construction contract for the state or for a political subdivision of the state shall, before the Friday of every second week, file with the Department of Labor and Workforce Development a sworn affidavit for the previous reporting period, setting out in detail the number of persons employed, wages paid, job classification of each employee, hours worked each day and week, and other information on a form provided by the Department of Labor and Workforce Development.

Sec. 36.05.045. Notice of work and completion; withholding of payment.

(a) Before commencing work on a public construction contract, the person entering into the contract with a contracting agency shall designate a primary contractor for purposes of this section. Before work commences, the primary contractor shall file a notice of work with the Department of Labor and Workforce Development. The notice of work must list work to be performed under the public construction contract by each contractor who will perform any portion of work on the contract and the contract price being paid to each contractor. The primary contractor shall pay all filing fees for each contractor performing work on the contract, including a filing fee based on the contract price being paid for work performed by the primary contractor's employees. The filing fee payable shall be the sum of all fees calculated for each contractor. The filing fee shall be one percent of each contractor's contract price. The total filing fee payable by the primary contractor under this subsection may not exceed $5,000. In this subsection, "contractor" means an employer who is using employees to perform work on the public construction contract under the contract or a subcontract.

(b) Upon completion of all work on the public construction contract, the primary contractor shall file with the Department of Labor and Workforce Development a notice of completion together with payment of any additional filing fees owed due to increased contract amounts. Within 30 days after the department's receipt of the primary contractor's notice of completion, the department shall inform the contracting agency of the amount, if any, to be withheld from the final payment.

(c) A contracting agency

(1) may release final payment of a public construction contract to the extent that the agency has received verification from the Department of Labor and Workforce Development that

(A) the primary contractor has complied with (a) and (b) of this section;

(B) the Department of Labor and Workforce Development is not conducting an investigation under this title; and

(C) the Department of Labor and Workforce Development has not issued a notice of a violation of this chapter to the primary contractor or any other contractors working on the public construction contract; and

(2) shall withhold from the final payment an amount sufficient to pay the department's estimate of what may be needed to compensate the employees of any contractors under investigation on this construction contract, and any unpaid filing fees.

(d) The notice and filing fee required under (a) of this section may be filed after work has begun if

(1) The public construction contract is for work undertaken in immediate response to an emergency; and

(2) The notice and fees are filed not later than 14 days after the work has begun.

(e) A false statement made on a notice required by this section is punishable under AS 11.56.210.

Sec. 36.05.060. Penalty for violation of this chapter.

A contractor who violates this chapter is guilty of a misdemeanor and upon conviction is punishable by a fine of not less than $100 nor more than $1,000, or by imprisonment for not less than 10 days nor more than 90 days, or by both. Each day a violation exists constitutes a separate offense.

Sec. 36.05.070. Wage rates in specifications and contracts for public works.

(a) The advertised specifications for a public construction contract that requires or involves the employment of mechanics, laborers, or field surveyors must contain a provision stating the minimum wages to be paid various classes of laborers, mechanics, or field surveyors and that the rate of wages shall be adjusted to the wage rate under AS 36.05.010.

(b) Repealed by §17 ch 142 SLA 1972.

(c) A public construction contract under (a) of this section must contain provisions that

(1) the contractor or subcontractors of the contractor shall pay all employees unconditionally and not less than once a week;

(2) wages may not be less than those stated in the advertised specifications, regardless of the contractual relationship between the contractor or subcontractors and laborers, mechanics, or field surveyors;

(3) the scale of wages to be paid shall be posted by the contractor in a prominent and easily accessible place at the site of the work;

(4) the state or a political subdivision shall withhold so much of the accrued payments as is necessary to pay to laborers, mechanics, or field surveyors employed by the contractor or subcontractors the difference between

(A) the rates of wages required by the contract to be paid laborers, mechanics, or field surveyors on the work; and

(B) the rates of wages in fact received by laborers, mechanics, or field surveyors.

Sec. 36.05.080. Failure to pay agreed wages.

Every contract within the scope of AS 36.05.070 shall contain a provision that if it is found that a laborer, mechanic, or field surveyor employed by the contractor or subcontractor has been or is being paid a rate of wages less than the rate of wages required by the contract to be paid, the state or its political subdivision may, by written notice to the contractor, terminate the contractor's right to proceed with the work or the part of the work for which there is a failure to pay the required wages and to prosecute the work to completion by contract or otherwise, and the contractor and the contractor's sureties are liable to the state or its political subdivision for excess costs for completing the work.

Sec. 36.05.090. Payment of wages from withheld payments and listing contractors who violate contracts.

(a) The state disbursing officer in the case of a state public construction contract and the local fiscal officer in the case of a political subdivision public construction contract shall pay directly to laborers, mechanics, or field surveyors from accrued payments withheld under the terms of the contract the wages due laborers, mechanics, or field surveyors under AS 36.05.070.

(b) The state disbursing officer or the local fiscal officer shall distribute to all departments of the state government and to all political subdivisions of the state a list giving the names of persons who have disregarded their obligations to employees. A person appearing on this list and a firm, corporation,

partnership, or association in which the person has an interest may not work as a contractor or subcontractor on a public construction contract for the state or a political subdivision of the state until three years after the date of publication of the list. If the accrued payments withheld under the contract are insufficient to reimburse all the laborers, mechanics, or field surveyors with respect to whom there has been a failure to pay the wages required under AS 36.05.070, the laborers, mechanics, or field surveyors have the right of action or intervention or both against the contractor and the contractor's sureties conferred by law upon persons furnishing labor or materials, and in the proceedings it is not a defense that the laborers, mechanics, or field surveyors accepted or agreed to accept less than the required rate of wages or voluntarily made refunds.

Sec. 36.05.900. Definition.
In this chapter, "contracting agency" means the state or a political subdivision of the state that has entered into a public construction contract with a contractor.

ADDITIONAL INFORMATION

LABORER CLASSIFICATION CLARIFICATION

The laborer rates categorized in class code S1201-S1206 apply in one area of Alaska; the area that is south of N63 latitude and west of W138 Longitude. The laborer rates categorized in class code N1201-N1206 apply in two areas of Alaska; the Alaska areas north of N63 latitude and east of W138 longitude. The following graphic representations should assist with clarifying the applicable wage rate categories:

S1201-
S1206

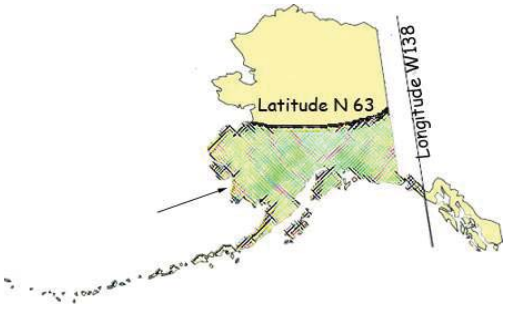

N1201-
N1206

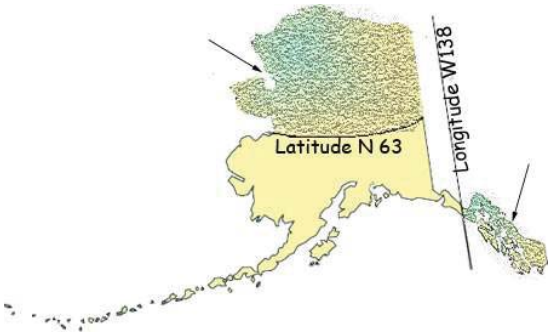

ACCOMMODATIONS AND PER DIEM

The Alaska Department of Labor and Workforce Development has adopted a per diem requirement for blocklayers, bricklayers, carpenters, dredgemen, heat & frost insulators/asbestos workers, ironworkers, laborers, operative plasterers & cement masons, painters, piledrivers, power equipment operators, roofers, surveyors, truck

drivers/surveyors, and tunnel workers. This per diem rate creates an allowable alternative to providing board and lodging under the following conditions:

Employer-Provided Camp or Suitable Accommodations
Unless otherwise approved by the Commissioner, the employer shall ensure that a worker who is employed on a project that is 65 road miles or more from the international airport in either Fairbanks, Juneau or Anchorage or is inaccessible by road in a 2-wheel drive vehicle and who is not a domiciled resident of the locality of the project shall receive meals and lodging. Lodging shall be in accordance with all applicable state and federal laws. In cases where the project site is not road accessible, but the employee can reasonably get to the project worksite from their permanent residence within one hour, the Commissioner may waive these requirements for that employee upon a written request from the employer.

The term "domiciled resident" means a person living within 65 road miles of the project, or in the case of a highway project, the mid-point of the project, for at least 12 consecutive months prior to the award of the project. However, if the employer or person provides sufficient evidence to convince the department that a person has established a permanent residence and an intent to remain indefinitely within the distance to be considered a "domiciled resident," the employer shall not be required to provide meals and lodging or pay per diem.

Where the employer provides or furnishes board, lodging or any other facility, the cost or amount thereof shall not be considered or included as part of the required prevailing wage basic hourly rate and cannot be applied to meet other fringe benefit requirements. The taxability of employer provided board and lodging shall be determined by the appropriate taxation enforcement authority.

Per Diem
Employers are encouraged to use commercial facilities and lodges; however, when such facilities are not available, per diem in lieu of meals and lodging must be paid at the basic rate of $75.00 per day, or part thereof, the worker is employed on the project. Per diem shall not be allowed on highway projects west of Livengood on the Elliott Highway, at Mile 0 of the Dalton Highway to the North Slope of Alaska, north of Mile 20 on the Taylor Highway, east of Chicken, Alaska, on the Top of the World Highway and south of Tetlin Junction to the Alaska-Canada border.

The above-listed standards for room and board and per diem only apply to the crafts as identified in Pamphlet 600, *Laborers' and Mechanics' Minimum Rates of Pay*. Other crafts working on public construction projects shall be provided room and board at remote sites based on the department's existing policy guidelines. In the event that a contractor provides lodging facilities, but no meals, the department will accept payment of $36 per day for meals to meet the per diem requirements.

APPRENTICE HIRING REQUIREMENTS

On July 24, 2005, Administrative Order No. 226 established a 15 percent goal for hiring apprentices in certain job categories on highway, airport, harbor, dam, tunnel, utility or dredging projects awarded by the Alaska Department of Transportation and Public Facilities that exceed $2.5 million. This Order will apply to all projects in the referenced categories that are advertised after September 1, 2005. On these projects, the hours worked by apprentices will be compared to the hours worked by journeyman level workers to determine if the 15 percent goal has been met. This on-the-job training goal is critical to ensure that the Alaska work force is prepared for the future. For additional details, contact the nearest Wage and Hour office at the address listed on Page xi of this publication. Administrative Order No. 226 may be viewed in its entirety on the Internet at http://www.gov.state.ak.us/admin-orders/226.html or call any Wage and Hour office to receive a copy.

APPRENTICE RATES

Apprentice rates at less than the minimum prevailing rates may be paid to apprentices according to an apprentice program which has been registered and approved by the Commissioner of the Alaska Department of Labor and Workforce Development in writing or according to a bona fide apprenticeship program registered with the U.S. Department of Labor, Office of Apprenticeship. **Any employee listed on a payroll at an apprentice wage rate who is not registered as above shall be paid the journeyman prevailing minimum wage in that work classification.** Wage rates are based on prevailing crew makeup practices in Alaska and apply to work performed regardless of either the quality of the work performed by the employee or the titles or classifications which may be assigned to individual employees.

FRINGE BENEFIT PLANS

Contractors/subcontractors may compensate fringe benefits to their employees in any one of three methods. The fringe benefits may be paid into a union trust fund, into an approved benefit plan, or paid directly on the paycheck as gross wages.

Where fringe benefits are paid into approved plans, funds, or programs including union trust funds, the payments must be contributed at least monthly. If contractors submit their own payroll forms and are paying fringe benefits into approved plans, funds, or programs, the employer's certification must include, in addition to those requirements of 8 AAC 30.020(c), a statement that fringe benefit payments have been or will be paid at least monthly. Contractors who pay fringe benefits to a plan must ensure the plan is one approved by the Internal Revenue Service and that the plan meets the requirements of 8 AAC 30.025 (eff. 3/2/08) in order for payments to be credited toward the prevailing wage obligation.

SPECIAL PREVAILING WAGE RATE DETERMINATION

Special prevailing wage rate determinations may be requested for special projects or a special worker classification if the work to be performed does not conform to traditional public construction for which a prevailing wage rate has been established under 8 AAC 30.050(a) of this section. Requests for special wage rate determinations must be in writing and filed with the Commissioner at least 30 days before the award of the contract. An applicant for a special wage rate determination shall have the responsibility to support the necessity for the special rate. An application for a special wage rate determination filed under this section must contain:

(1) a specification of the contract or project on which the special rates will apply and a description of the work to be performed;
(2) a brief narrative explaining why special wage rates are necessary;
(3) the job class or classes involved;
(4) the special wage rates the applicant is requesting, including survey or other relevant wage data to support the requested rates;
(5) the approximate number of employees who would be affected; and
(6) any other information which might be helpful in determining if special wage rates are appropriate.

Requests made pursuant to the above should be addressed to:

Director
Alaska Department of Labor and Workforce Development
Labor Standards & Safety Division
Wage and Hour Administration
P.O. Box 111149
Juneau, AK 99811-1149
-or-
Email: anchorage.lss-wh@alaska.gov

LABOR STANDARDS REGULATIONS
NOTICE REQUEST

If you would like to receive ***notices of proposed changes to regulations*** for Wage and Hour or Mechanical Inspection, please indicate below the programs for which you are interested in receiving such notices, print your name and email or mailing address in the space provided, and send this page to:

Alaska Department of Labor and Workforce Development
Labor Standards & Safety Division
Wage and Hour Administration
1251 Muldoon Road, Suite 113
Anchorage, AK 99504-2098
Email: anchorage.lss-wh@alaska.gov

For *REGULATIONS* information relating to any of the following:

❒ Wage and Hour Title 23 Employment Practices
❒ Wage and Hour Title 36 Public Works
❒ Employment Agencies
❒ Child Labor
❒ Employment Preference (Local Hire)
❒ Plumbing Code
❒ Electrical Code
❒ Boiler/Pressure Vessel Construction Code
❒ Elevator Code
❒ Certificates of Fitness
❒ Recreational Devices

Request any of the following *PUBLICATIONS* by checking below:

❒ Wage and Hour Title 23 Employment Practices
❒ Minimum Wage & Overtime Poster
❒ Child Labor Poster
❒ Public Construction Pamphlet
❒ Public Construction Wage Rates
❒ Child Labor Pamphlet

PLEASE NOTE: DUE TO INCREASED MAILING AND PRINTING COSTS, ONLY ONE OF EACH PUBLICATION REQUESTED WILL BE MAILED TO YOU. IF YOU WISH TO RECEIVE ADDITIONAL COPIES OR SUBSEQUENT PUBLICATIONS, PLEASE CONTACT OUR OFFICE AT (907) 269-4900.

Name: _____

Mailing Address: _____

_____

_____

_____

Email Address: _____

EMPLOYMENT PREFERENCE INFORMATION
(EFFECTIVE August 16, 2013)

By authority of AS 36.10.150 and 8 AAC 30.064, the Commissioner of Labor and Workforce Development has determined the 15 boroughs and census areas listed below to be Zones of Underemployment. A Zone of Underemployment requires that Alaska residents who are eligible under AS 36.10.140 be given a minimum of 90 percent employment preference on public works contracts throughout the state in certain job classifications. This hiring preference applies on a project-by-project, craft-by-craft or occupational basis and must be met each workweek by each contractor/subcontractor.

For additional information about the Alaska resident hire requirements, contact the nearest Wage and Hour Office in Anchorage at (907) 269-4900, in Fairbanks at (907) 451-2886 or in Juneau at (907) 465-4248.

The following classifications qualify for a minimum of 90 percent Alaska resident hire preference:

Aleutians East Borough: Plumbers and Pipefitters
Aleutians West Borough: Painters
Bethel Census Area: Culinary Workers, Foremen and Supervisors, Mechanics, Painters, Surveyors, Tug Boat Workers
Denali Borough: Carpenters
Dillingham Census Area: Carpenters, Culinary Workers, Electricians, Equipment Operators, Foremen and Supervisors, Laborers, Mechanics, Truck Drivers, Tug Boat Workers
Hoonah-Angoon Census Area: Carpenters, Culinary Workers, Electricians, Equipment Operators, Foremen and Supervisors, Laborers, Mechanics, Painters, Truck Drivers
Nome Census Area: Carpenters, Culinary Workers, Electricians, Equipment Operators, Foremen and Supervisors, Laborers, Mechanics, Surveyors, Truck Drivers, Tug Boat Workers, Welders
Northwest Arctic Borough: Carpenters, Culinary Workers, Electricians, Equipment Operators, Foremen and Supervisors, Plumbers and Pipefitters, Surveyors, Truck Drivers, Tug Boat Workers, Welders
Petersburg Borough: Culinary Workers, Engineers and Architects, Foremen and Supervisors, Laborers
Prince of Wales-Hyder Census Area: Carpenters, Culinary Workers, Electricians, Equipment Operators, Foremen and Supervisors, Laborers, Mechanics, Surveyors, Truck Drivers, Welders
Skagway: None
Southeast Fairbanks Census Area: Carpenters, Culinary Workers, Equipment Operators, Laborers, Painters, Truck Drivers
Wade Hampton Census Area: Carpenters, Electricians, Engineers and Architects, Mechanics, Roofers
Yakutat: None
Yukon-Koyukuk Census Area: Culinary Workers, Electricians, Foremen and Supervisors, Painters, Plumbers and Pipefitters, Surveyors, Truck Drivers, Tug Boat Workers, Welders

This determination is effective August 16, 2013, and remains in effect until June 30, 2015.

The first person on a certified payroll in any classification is called the "first worker" and is not required to be an Alaskan resident. However, once the contractor adds any more workers in the classification, then all workers in the classification are counted, and the 90 percent is applied to compute the number of required Alaskans to be in compliance. To compute the number of Alaskan residents required in a workweek in a particular classification, multiply the number of workers in the classification by 90 percent. The result is then rounded down to the nearest whole number to determine the number of Alaskans that must be employed.

If a worker works in more than one classification during a week, the classification in which they spent the most time would be counted for employment preference purposes. If the time is split evenly between two classifications, the worker is counted in both classifications.

If you have difficulty meeting the 90 percent requirement, an approved waiver must be obtained before a non-Alaskan resident is hired who would put the contractor/subcontractor out of compliance (8 AAC 30.081 (e) (f)). The waiver process requires proof of an intensive search for qualified Alaskan workers. To apply for a waiver, contact the nearest Wage and Hour Office for instructions.

Here is an example to apply the 90 percent requirement to four carpenter workers. Multiply four workers by 90% and drop the fraction (.90 X 4 = 3.6 - .6 = 3). The remaining number is the number of Alaskan resident carpenters required to be in compliance in that particular classification for that week.

The penalties for being out of compliance are serious. AS 36.10.100 (a) states "A contractor who violates a provision of this chapter shall have deducted from amounts due to the contractor under the contract the prevailing wages which should have been paid to a displaced resident, and these amounts shall be retained by the contracting agency." If a contractor/subcontractor is found to be out of compliance, penalties accumulate until they come into compliance.

If you have difficulty determining whether a worker is an Alaska resident, you should contact the nearest Wage and Hour Office. Contact Wage and Hour in Anchorage at (907) 269-4900, in Fairbanks at (907) 451-2886, or in Juneau at (907) 465-4842.

Alaska Department of Labor and Workforce Development
Labor Standards & Safety Division
Wage and Hour Administration
Web site: http://labor.state.ak.us/lss/pamp600.htm

Anchorage	**Juneau**	**Fairbanks**
1251 Muldoon Road, Suite 113 Anchorage, Alaska 99504-2098 Phone: (907) 269-4900 Email: anchorage.lss-wh@alaska.gov	1111 W. 8th Street, Suite 302 Juneau, Alaska 99801 Phone: (907) 465-4842 Email: juneau.lss-wh@alaska.gov	Regional State Office Building 675 7th Ave., Station J-1 Fairbanks, Alaska 99701-4593 Phone: (907) 451-2886 Email: fairbanks.lss@alaska.gov

DEBARMENT LIST

AS 36.05.090(b) states that "the state disbursing officer or the local fiscal officer shall distribute to all departments of the state government and to all political subdivisions of the state a list giving the names of persons who have disregarded their obligations to employees."

A person appearing on the following debarment list and a firm, corporation, partnership, or association in which the person has an interest may not work as a contractor or subcontractor on a public construction contract for the state or a political subdivision of the state for three years from the date of debarment.

Company Name	Date of Debarment	Debarment Expires

No companies are currently debarred.

SPECIAL NOTICE TO BIDDERS

NEW "LITTLE DAVIS BACON ACT" CHANGES FILING PROCESS AND ASSESSES SPECIAL FEES ON PUBLIC WORKS CONSTRUCTION PROJECTS

The news release concerning these changes is at: http://labor.state.ak.us/news/2003/news03-23.htm

Governor Sean Parnell signed changes to CSHB 155 into law on July 22, 2011 (effective October 20, 2011), in addition to Governor Murkowski CSHB 155 changes on June 16, 2003 (effective July 2, 2003). The new laws allow contractors working on certain public construction projects to file bi-weekly versus weekly-certified payrolls to the Alaska Department of Labor and Workforce Development (DOLWD), filing requirements **and** it levies filing fees.

- **What does this change accomplish?**

  State Funded Projects - Instead of submitting certified payrolls weekly, prime Contractors working on State funded public construction projects are now allowed to file certified payrolls every other week - bi-weekly payroll reports on State funded project shall not contain Social Security Numbers. In conjunction with this statutory change, the DOLWD is revising the certified payroll form. The revised certified payroll form is available at: http://www.labor.state.ak.us/lss/lssforms.htm

  Federally Funded Projects - Federal weekly payroll filing requirements under 29 CFR 5.5 (a) (3) are not changed by this new law. But, the assessment of a one percent fee based on the estimated value of work performed and of the value of each subcontractor's price now applies (see below).

  And, Federal Statue and form 25D-55 still require Social Security Numbers for the certified weekly payroll reports submitted on Federally funded projects.

- **Are there special forms to file and fees to pay?**

  Effective October 20, 2011, the prime Contractor working on any public construction project exceeding $25,000 must file a "Notice of Work" and a "Notice of Completion" form with the DOLWD.

  A one percent filing fee will be assessed on contracts with an amount of $25,000 or more. The fee will be based on the estimated value of work to be performed by the prime contractor, and one percent of the value of each subcontractor's price. The maximum fee is $5,000.00.

  Amounts paid to owner/operators who do not use employees are exempt from the filing fee.

  The Contractor must provide to the Contracting Agency a copy of the "Notice of Work" form that has been date stamped as received by the DOL along with confirmation of fee payment before work on the project may commence.

  And, the Contractor must file a "Notice of Completion" with the DOLWD when work is completed. The Contracting Agency will not perform the "close-out for final project completion" until notice from the DOLWD that they have processed the Contractors "Notice of Completion" form. The "Notice of Work" and "Notice of Completion" forms are available at: http://www.labor.state.ak.us/lss/lssforms.htm

- **What about emergency work and projects bid opened before July 1, 2003?**

  There are special provisions for filing the "Notice of Work" and the payment of fees for an emergency response project. Contractors have 14 days after starting work in which to file the "Notice of Work" and pay the fees on an emergency response project.

  A prime Contractor under a contract that had a final bid date before July 1, 2003 will not be required to pay a filing fee, regardless of when the work starts.

- **How can I find out more about this new law?**

  Contact the Dept. of Labor Workforce and Development, Wage and Hour Administration at:

  Juneau 907.465.4842
  Anchorage 907.269.4900
  Fairbanks 907.451.2886

Issued October 21, 2011

Online Certified Payroll
Frequently Asked Questions

1. Do I have to use the Online CP system?

If you are awarded an Alaska Department of Transportation and Public Facilities (DOTPF) project they will be requiring you to submit online certified payrolls in the very near future. Otherwise filing online is optional. The transfer will be gradual. The Department of Labor and Workforce Development (DOLWD) will still accept hardcopy certified payrolls. DOLWD will eventually require it. Check with your local DOLWD regional office or the Labor home page for further updates.

2. How do I electronically file my certified payrolls?

It's easy! https://myalaska.state.ak.us/home/app. Click on "LSS-Online Filing Services". If you don't already have a My Alaska account, you'll have to create one. If more than one person in your company enters the certified payroll information, you can create the level of security within your company necessary to verify who submitted the information

3. Who do I contact if I have a problem entering my CPs into the new online system?

Call your Wage and Hour office that is within the project region, or send an email to:

- Anchorage.LSS-WH@alaska.gov
- Juneau.LSS-WH@alaska.gov
- Fairbanks.LSS_WH@alaska.gov

4. How do I get My Alaska Employer Identification Number (AK ID)?

Apply online at: https://myalaska.state.ak.us/home/app?service=external/launch&pubid=tos

5. How do I get my Employer Identification Number (EIN)?

This is a Federal Employer ID number that you should obtain when you start a business Most all businesses in the State of Alaska, EIN number start with "2-." If you do not have one, please email the Employment Security Tax Division at esd.tax@alaska.gov or contact:

Phone: (907) 465-2757
Toll Free: (888) 448-3527
(888) 448-2937
Relay Alaska TDD/TTY/TT
Services: 1-800-770-8973
Fax: (907) 465-2374

Mailing Address:
Alaska Department of Labor and
Workforce Development
Employment Security Tax
PO Box 115509
Juneau, AK 99811-5509

6. Am I the prime contractor?

You are the prime contractor only if you have received a contract from the State of Alaska or a subsidiary of the State

7. Am I a sub-contractor?

You are a Subcontractor if you are contracted by another contractor to do a portion of the work. Both the Prime and the Subcontractors are required by law to submit certified payrolls.

8. What is a Notice of Work (NOW)?

A Notice of Work is the document that is filed with the DOLWD upon notice of award of a public works project from the contracting agency. Go to http://labor.alaska.gov/lss/forms/notice-of-work.pdf to download a copy of the form. Once the NOW is filed and the filing fee is paid as required by AS 36.05.045, DOLWD will issue a temporary NOW to the contractor who can then notify the contracting agency that they are in compliance, and thus allows the contractors to begin work on their project. The DOLWD has up to10 business days (not including weekends/holidays) to process your Notice of Work and assign DOL # to the project from the date of receipt.

9. What is a Notice of Completion (NOC)?

The Notice of Completion is the document that is filed with DOLWD upon completion of the project. Go to http://labor.alaska.gov/lss/forms/not-comp-pub-wrks.pdf to download a copy of the form. This is where the prime contractor would note any change orders that occurred over the life of the public works project. Once the NOC is filed, and DOLWD approves it, the contractor can submit the finalized approved NOC to the contracting agency for final payment of their contract. The Department has 30 days to process your Notice of Completion.

10. What is the Contracting Agency (CA) Number?

This is the number given to the prime contractor from the agency that issues the contract for public construction.

11. What is a Temporary Identification Number (TDN)?

This is a number assigned to a project, by the online certified payroll program, after the prime contractor notified DOLWD.

12. What is a DOLWD public works project number?

This is a number assigned by Wage and Hour Administration for each public project

STATE OF ALASKA
DEPARTMENT OF HEALTH & SOCIAL SERVICES

SECTION 00850
DRAWING INDEX

McLaughlin Youth Center Air Handling Unit Upgrades
ANC 15-04C

GENERAL
- T1.1 Cover sheet

ARCHITECTURAL
- A100 Architectural

ELECTRICAL
- E0.1 Electrical Symbol Legend & Abbreviations
- E1.1 Electrical Sub Floor Plan – Demo
- E2.1 Electrical Sub Floor Plan
- E3.1 Electrical First Floor Plan
- E4.1 Additive Alternate #2 – Electrical Roof Plan

MECHANICAL
- M1.1 Mechanical Symbol Legend
- M1.2 Mechanical Schedules
- M2.1 Demo HVAC Plan
- M3.1 Heating Plan
- M4.1 Ventilation Plan
- M5.1 Mechanical Diagrams

STRUCTURAL
- S1.1 Plans & Details

SECTION 01005
ADMINISTRATIVE PROVISIONS

PART I GENERAL

1.01 REQUIREMENTS INCLUDED

A. Local Conditions
B. Permits, Fees, and Inspections
C. Alternates
D. Preconstruction Meeting
E. Applications for Payment
F. Contractor Use of Premises
G. Owner Occupancy
H. Owner - Furnished Products
I. Coordination
J. Reference Standards

1.02 RELATED REQUIREMENTS

A. General and Special Conditions

1.03 LOCAL CONDITIONS

A. Bidders shall familiarize themselves with the Contract Documents and existing conditions, which affect Work, required by the Contract Documents. It will be assumed that bidders have made a personal examination of the jobsite, existing conditions, and documents for prior construction projects associated with this facility made available by the Owner for review by Bidders during the bid period.

B. Failure to visit the jobsite, to review existing conditions, or to review documents for prior construction projects associated with this facility made available by the Owner for review by Bidders during the bid period will in no way relieve the successful Bidder nom the necessity of furnishing any materials or performing any Work that may be required to complete the Work in accordance with the Contract Documents with no additional cost to the Owner.

C. For building access and for access to the documents for prior construction projects associated with this facility contact:

James Wann, Maintenance Foreman, 261-4338

1.04 PERMITS, FEES, AND INSPECTIONS

A. Obtain, pay for, and comply with the requirements of all permits, fees, and inspections required by public authorities.

B. Transmit copies of permit applications, permits received, and public authority inspection reports to the Contracting Officer within three days of making permit application or receiving permits or reports.

1.05 ALTERNATES

A. Alternates will be exercised at the option of Owner as specified on Bid Schedule. Accepted alternates will be indicated on the Contract and included within the conformed Contract Documents.

B. Coordinate related work and modify surrounding work affected by accepted alternates as required to complete the Work.

C. Provide all Work as part of the Base Bid except that Work specifically indicated to be provided as part of an alternate.

1.06 PRECONSTRUCTION MEETING

A. Attend Owner initiated preconstruction meeting.

1.07 APPLICATIONS FOR PAYMENT

A. Submit two copies of each application under procedures of Section 01027.

B. Content and Format: That specified for schedule of values in Section 01027.

1.08 CONTRACTOR USE OF PREMISES

A. Limit use of premises for Work and for construction operations, to allow for Owner occupancy, Work of other Contractors, and public access.

B. Limit areas of construction operations to those areas requiring renovation only.

C. Give written notice two weeks in advance of beginning of Work in any Work area.

D. Do not smoke except in specifically designated smoking areas.

E. Take reasonable and adequate precautions to protect the Owner's property from damage during execution of Work. Restore any damage to Owner property resulting from execution of Work or replace in a manner satisfactory to the Contracting Officer.

F. Take reasonable and adequate precautions to protect the Owner's property from damage during execution of Work. Restore any damage to Owner property resulting from execution of Work or replace in a manner satisfactory to the Contracting Officer.

G. Limit construction activities which generate noise levels in excess of NC=40 in classrooms, NC=50 in office areas, and NC=60 in other areas to between 7 p.m. and 7 a.m. Monday through Friday and all day Saturday and Sunday.

H. Limit construction access to building to the location indicated. Keep construction access points locked at all times. Contractor will be provided with two sets of keys for construction access points.

I. Move Owner tools, equipment, shelving, stored materials, etc. as required to accomplish Work. Return to original location as soon as possible.

J. Protect Owner tools, equipment, shelving, stored materials, and equipment, etc. from Work.

K. In Owner occupied areas:

1. Limit use of premises for Work and for construction operations to between 7:00 a.m. and 3:30 p.m. Monday through Friday. If requested by the Contractor and approved by the Project Manager the Contractor may work on the project outside these hours if the Contractor's activities do not interfere with owner operations.

2. Cover and protect from dust and debris, at the start of each work day, electronic office equipment such as personal computers, computer terminals, facsimile machines, copiers, printers, postage meters, VCRs, monitors, typewriters, etc. Remove protection at the end of each work day.

3. Do not use furniture, such as countertops, desks, filing cabinets, book shelves, and tables as work surfaces or as steps to access Work.

4. At the end of each workday, move back to original location equipment and furniture moved to accommodate Work. Do not move electronic equipment unless absolutely necessary to accomplish Work.

5. At the end of each workday replace ceiling tiles removed to access Work.

6. At the end of each work day, clean work areas, including floors with a vacuum, and remove tools, equipment, and construction material from work areas.

M. Coordinate temporary shutdowns of any of the existing facilities' mechanical or electrical systems affecting systems in Owner occupied areas with the Contracting Officer. Schedule shutdowns for nights and weekends. Provide a minimum five-day notice.

N. Existing systems shall be fully operational for intended purpose at the beginning of each Owner workday.

1.09 OWNER OCCUPANCY

A. The Owner will occupy premises during entire period of construction for the conduct of its normal operations.

B. Maintain IBC complying access to and through corridors, stairways, and building exits at all times.

C. Cooperate with Owner to minimize conflict and to facilitate its operations. In case of conflict accept Contracting Officer's direction as final and adjust use of premises accordingly.

D. Coordinate Work in and use of premises with the Owner

1.10 COORDINATION

A. Coordinate Work of the various Sections of Specifications prior to ordering materials and fabrication to assure efficient and orderly sequence of installation of construction elements, with provisions for accommodating items installed later. Notify Contracting Officer of conflicts between elements prior to installation of any element.

B. Verify characteristics of elements of interrelated operating equipment are compatible; coordinate Work of various Sections having interdependent responsibilities for installing, connecting to, and placing in service, such equipment.

C. Coordinate space requirements and installation of mechanical and electrical Work, which is indicated diagrammatically on Drawings. Follow routing shown for ducts and conduits as closely as practical. Make piping, duct, and conduit runs parallel with lines of building. Utilize spaces efficiently to maximize accessibility for other installations, for maintenance, and for repairs.

D. In finished areas, unless otherwise indicated, conceal pipes, ducts, and wiring in the construction.

E. After Owner acceptance of Work, coordinate access to site by various trades for correction of defective Work and Work not in accordance with Contract Documents, to minimize disruption of Owner activities.

1.11 REFERENCE STANDARDS

A. For products or workmanship specified by association, trades, or regulatory agency standards, comply with requirements of the standard, except when more rigid requirements are specified or are required by applicable codes.

B. Obtain a copy of standards referenced. Maintain a copy at the jobsite during execution of Work to which the standard applies.

C. The date of the standard is that in effect as of the bid date except when a specific date is specified.

1.12 ONE YEAR CORRECTION PERIOD

A. If within one year after the date of Final Completion or such longer period of time as may be prescribed by Regulatory Requirements or by the terms of any applicable special guarantee required by the Contract Documents or by any specific provision of the Contract Documents, any Work, materials, or products are found to be defective, the Contractor shall promptly, without cost to the Owner and in accordance with the Contracting Officer's written instructions, either correct such defective Work, or, if it has been rejected by the Contracting Officer, remove it from the site and replace it with conforming Work.

B. If the Contractor does not promptly comply with the terms of such instructions, or in an emergency where delay would cause serious risk of loss or damage, the Owner may have the defective Work corrected or the rejected Work removed and replaced, and all direct, indirect, and consequential costs of such removal and replacement (including but not limited to fees and charges of engineers, architects, attorneys, and other professionals) will be paid by the Contractor.

C. In special circumstances where a particular item of equipment is placed in continuous service for the benefit of the Owner before Substantial Completion of all the Work, the correction period for that item may begin on an earlier date if so provided in the Specifications of by Change Order.

D. Provisions of this paragraph are not intended to shorten the statue of limitations for bringing an action.

PART 2 PRODUCTS Not Used

PART 3 PARTS Not Used

END OF SECTION

SECTION 01010

SUMMARY OF WORK

PART 1 GENERAL

1.01 REQUIREMENTS INCLUDED

A. Basic Bid.

B. Work by Others.

C. Hazardous Materials

D. Work Inside Facility

E. Work Plans and Access to Facility, Individual Work Areas

F. Shut Offs/Disruptions to Service

G. Use of Premises.

H. Using Agency Occupancy.

I. Coordination

J. Parking/Staging

1.02 RELATED REQUIREMENTS

A. Document 00200 – Information available to bidders.

B. Document 00700 - General Conditions: Provisions for use of site, and Using Agency occupancy. Relations of CONTRACTOR- Subcontractors.

C. Document 00800 - Supplementary Conditions: Modifications to General Conditions.

D. Section 01400 – Quality Control

E. Section 01540 – Security.

1.03 WORK COVERED BY CONTRACT DOCUMENTS

A. Work covered by the contract documents is located

B. The DEPARTMENT is acting for the State of Alaska.

1.04 CONTRACT METHOD

A. Construct the Work under a single lump sum Contract.

1.05 BASIC BID and ADDITIVE ALTERNATES 1-3

A. This project replaces three air handling units in the Probation Wing subfloor utility space, the installation of a Glycol system, and a replacement of various reheat coils in the facility.

B. Additive Alternate # 1: Conversion of Johnson Controls DDC Graphics to Siemens DDC System and additional DDC points for heat exchanger pumps.

C. Additive Alternate # 2: Installing mechanical cooling in the air handlers serving the Probation Wing.

D. Additive Alternate # 3: Detention core lights and receptacles.

E. Project will be constructed under a general construction contract.

1.06 WORKS BY OTHERS

A. Cooperate with other Contractors and the DEPARTMENT to minimize conflict with construction operation.

1.07 HAZARDOUS MATERIALS

A. All light fixtures to be removed shall be treated as positive for containing PCBs unless proven otherwise.

B. CONTRACTOR to be aware that other hazardous materials may be within the facility. See Section 00700 Article 4.3.

1.08 WORK INSIDE FACILITY

A. Work within the facility shall be conducted only between the hours of 7:00 am and 3:30 pm, unless specifically approved by the Maintenance Supervisor. Requests for work outside of these hours must be submitted in writing 24 hours in advance.

B. See Section 01540 Security for Juvenile Justice Security requirements for Contractors employees and security background checks they require of anyone slated to work at the Facility.

1.09 SHUTOFFS / DISRUPTIONS TO SERVICE

A. Work with the Maintenance Supervisor to schedule disruption for a time, which minimizes impact on facility operations. Provide the Engineer written notification of any disruption to service at least 24 hours in advance of scheduled disruption or shutoff.

B. Plan work to minimize down time. Work with DEPARTMENT to schedule disruption for a time that minimizes impact on USING AGENCY's operations.

C. Provide written work plan and schedule for disruptions to service that exceed one hour.

D. Contractor must provide protection as stated in Municipal Fire Codes and Safety Codes while working on the fire protection system.

1.10 CONTRACTOR'S USE OF PREMISES

A. Coordinate use of the premises under direction of DEPARTMENT.

B. Assume full responsibility for protection and safekeeping of products under this Contract.

C. Assume full responsibility for the protection of the existing facility and contents, from damage due to construction operations.

1.11 USING AGENCY OCCUPANCY

A. The User Agency will continue operations adjacent to the site during entire construction period. Cooperate with DEPARTMENT in scheduling operations to minimize conflict and to facilitate the User Agency's operations.

B. CONTRACTOR shall provide Material Safety Data Sheets for all products that may produce unpleasant odors.

1.12 COORDINATION

A. Coordinate Work of the various elements of the plans to assure efficient and orderly sequence of installation of construction elements, with provisions for accommodating items installed later.

B. Verify if characteristics of elements of interrelated operating equipment are compatible;

coordinate Work of various trades having interdependent responsibilities for installing, connecting to, and placing in service, such equipment.

C. Coordinate space requirements and installation of mechanical and electrical work, which are indicated diagrammatically on Drawings. Follow routing shown for pipes, ducts, and conduits, as closely as practicable; make runs parallel with lines of building. Utilize spaces efficiently to maximize accessibility for other installations, for maintenance, and for repairs. Coordinate work with existing elements in the building. Do not locate piping, conduit or other products where they will block access to equipment or junction boxes.

D. In finished areas except as otherwise shown, conceal pipes, ducts, and wiring in the construction. .

E. Execute cutting and patching to integrate elements of Work, provide openings for penetrations of existing surfaces. Seal penetrations through floors, walls, partitions, and ceilings.

1.13 PARKING / STAGING

A. CONTRACTOR to coordinate staging area with Facility Maintenance Supervisor.

B. CONTRACTOR may use established facility parking.

C. CONTRACTOR will be responsible for all additional required storage/staging and parking off site at no charge to the Department.

PART 2 PRODUCTS Not Used

PART 3 EXECUTION Not used

END OF SECTION

SECTION 01020
INTENT OF DOCUMENTS

PART 1 GENERAL

1.01 REQUIREMENTS INCLUDED

A. Explanation of intent and terminology of the Construction Documents.

1.02 RELATED REQUIREMENTS

A. Document 00700 - General Conditions: Article 1 Definitions relating to 'Drawings' and 'Specifications'.

B. Document 00700 - General Conditions: Article 3 Contract Documents relating to Intent, Amending, and Reuse.

1.03 SPECIFICATION FORMAT AND COMPOSITION

A. Specifications are divided into Divisions and Sections for the convenience of writing and using. Titles are not intended to imply a particular trade jurisdiction. DEPARTMENT is not bound to define the limits of any subcontract, and will not enter into disputes between the CONTRACTOR and his employees, including Subcontractors.

B. Pages are numbered independently for each Section, and recorded in the Table of Contents. Section number is shown with the page number at the bottom of each page. The end of each Section of the specifications is ended by "End of Section". It is CONTRACTOR'S responsibility to verify that Contract Documents received for bidding and/or construction are complete in accordance with Table of Contents.

C. The language employed in the Contract Documents is addressed directly to the CONTRACTOR. Imperative or indicative language is generally employed throughout and requirements expressed are the mandatory responsibility of the CONTRACTOR, even though the work specified may be accomplished by specialty subcontractors engaged by the CONTRACTOR. References to third parties in this regard shall not be interpreted in any way as to relieve the CONTRACTOR of his or her responsibility under this Contract.

D. These Specifications are of the abbreviated or "streamlined" type, and may include incomplete sentences.

E. Omissions of words or phrases such as "the CONTRACTOR shall," "in conformity therewith," "shall be," "as noted on the Drawings," "according to the Drawings," "a," "an," "the" and "all" are intentional.

F. Omitted words or phrases shall be supplied by inference in the same manner as they are when a "note" occurs on the Drawings.

1.04 DRAWINGS: CONTENT EXPLANATION

A. Drawings, Dimensions and Measurements.

1. Contract Documents do not purport to describe in detail, absolute and complete construction information. In some instances drawings are diagrammatic.

2. CONTRACTOR shall provide verification of actual site conditions and shall provide complete and operational systems as specified when drawings do not provide full detail.

3. Where on any of the Drawings a portion of the work is drawn out and the remainder is indicated in outline, the parts drawn out shall apply also to all other portions of the Work.

4. Wherever a detail is referenced and developed for a specific condition, same or similar detail shall apply to identical or similar conditions elsewhere on Project even though not specifically referenced.

5. Where the word "similar" occurs on the Drawings, it shall be interpreted in its general sense and not as meaning identical, all details shall be worked out in relation to their location and their connection with other parts of the work.

6. The figured dimensions on the Drawings or notes indicating dimensions shall be used instead of measurements of the Drawings by scale.

7. No scale measurements shall be used as a dimension to work with except on "full size" Drawings not dimensioned.

1.05 COMMON TERMINOLOGY

A. Certain items used generally throughout the Specifications and Drawings are used as follows:

1. Indicated: The term "indicated" is a cross reference to details, notes or schedules on the Drawings, other paragraphs or schedules in the Specifications, and similar means of recording requirements in the Contract Documents. Where terms such as "shown", "noted", "schedules", and "specified" are used in lieu of "indicate", it is for the purpose of helping the reader accomplish the cross reference, and no limitation of location is intended except as specifically noted.

2. Installer: The person or entity engaged by CONTRACTOR, his Subcontractor or sub-subcontractor for the performance of a particular unit of Work at the Project site, including installation, erection, application and similar required operations. It is a general requirement that installers be recognized experts in the work they are engaged to perform.

3. Furnish: Except as otherwise defined in greater detail, the term "furnish" is used to mean"...supply and deliver to the Project site, ready for unpacking, assembly and installation..."

4. Provide: Except to the extent further defined, the term "provide" means to furnish and install, complete and ready for the intended use.

5. Guarantee and Warranty: "Warranty" is generally used in conjunction with products manufactured or fabricated away from the Project site, and "guarantee" is generally used in conjunction with units of work which require both products and substantial amounts of labor at the Project site. The resulting difference is that warranties are frequently issued by manufacturers, and guarantees are generally issued by CONTRACTOR and frequently supported (partially) by product warranties from manufacturers.

1.06 CONFLICTS

A. Report any conflicts to Contracting Officer for clarification.

PART 2 PRODUCTS Not Used

PART 3 EXECUTION Not Used

END OF SECTION

SECTION - 01027
APPLICATIONS FOR PAYMENT

PART 1 GENERAL

1.01 REQUIREMENTS INCLUDED

A. Procedures for preparation and submittal of Applications for Payment.

1.02 RELATED REQUIREMENTS

A. Document 00510 - Construction Contract - Contract Form 06D-10a and Bid Schedule: Method of Payment and Contract Price and Amounts of Liquidated Damages.

B. Document 00700 - General Conditions: Progress Payments, and Final Payment.

C. Section 00800 – Supplementary Conditions to General Conditions of the Construction Contract for Buildings: SC-11.2 and SC-11.8.

D. Section 01300 - Submittals: Procedures, Schedule of Values .

E. Section 01700 - Contract Closeout: Closeout Procedures.

1.03 FORMAT

A. Application for Payment form in format approved by the DEPARTMENT.

1.04 PREPARATION OF APPLICATIONS

A. Type required information on Application for Payment form approved by DEPARTMENT.

B. Execute certification by original signature of authorized officer upon each copy of the Application for Payment.

C. Submit names of individuals authorized to be responsible for information submitted on application for payment.

D. Indicate breakdown of costs for each item of the Work on accepted schedule of values. Provide dollar value in each column for each line item for portion of Work performed and for stored products.

E. List each authorized Change Order as an extension on continuation sheet, listing Change Order number and dollar amount as for an original item of Work.

F. Prepare Application for Final Payment as specified in Section 01700.

1.05 SUBMITTAL PROCEDURES

A. Submit two copies of each Application for Payment at times stipulated in Contract.

B. Submit under transmittal letter specified in Section 01300.

1.06 SUBSTANTIATING DATA

A. When DEPARTMENT requires substantiating information, submit data justifying line item amounts in question.

B. Substantiating data required under 7.12.3 and 7.12.4 shall be submitted (or updated) when the Application for Payment includes a current request for payment on an item of Work required to include Alaska "agricultural/wood" products.

C. Provide one copy of data with cover letter for each copy of Application. Show Application number and date, and line item by number and description.

1.07 SUBMITTALS WITH APPLICATION FOR PAYMENT

A. Submit the following with each Application for Payment.

1. Updated construction schedule as required by Section 01300 - Submittals.
2. Updated Schedule of Values as required by Section 01300 – Submittals: Schedule of Values.
3. The contractor’s as-builts will be reviewed prior to approving each application for payment.

PART 2 PRODUCTS Not Used

PART 3 EXECUTION Not Used

END OF SECTION

SECTION 01028
CHANGE ORDER PROCEDURES

PART 1 GENERAL

1.01 REQUIREMENTS INCLUDED

A. Procedures for processing Change Orders.

1.02 RELATED REQUIREMENTS

A. Document 00312 - Bid Schedule: Total amount bid for lump sum items

B. Document 00510 - Contract Form: Total amount of Contract Price, as awarded

C. Document 00700 - General Conditions: Governing requirements for changes in the Work, in Contract Price, and Contract Time.

D. Document 00800 - Supplementary Conditions: Modifications to Document 00700 - General Conditions.

E. Section 01027 - Applications for Payment.

F. Section 01300 - Submittals: Construction Progress Schedules, Schedule of Values.

G. Section 01600 – Material and Equipment: Product Options, Substitutions.

H. Section 01700 – Contract Closeout: Project Record Documents.

1.03 SUBMITTALS

A. Submit name of the individual authorized to accept changes, and to be responsible for informing others in CONTRACTOR's employ of changes in the Work.

B. Change Order Forms will be prepared by the DEPARTMENT.

1.04 DOCUMENTATION OF CHANGE IN CONTRACT PRICE AND CONTRACT TIME

A. Maintain detailed records of work done on a Cost of the Work plus a Fee basis. Provide full information required for evaluation of proposed changes, and to substantiate costs of changes in the Work. Incomplete or unsubstantiated costs will be disallowed.

B. CONTRACTOR shall submit a complete, detailed, itemized cost breakdown addressing impact on Contract Time and Contract Price with each proposal.

C. On request, provide additional data to support computations:

1. Quantities of products, labor, and equipment.

2. Taxes, insurance and bonds.

3. Overhead and profit.

4. Justification for any change in Contract Time.

5. Credit for deletions from Contract, similarly documented.

D. Support each claim for additional costs, and for work done on a cost of the Work plus a Fee basis, with additional information:

1. Origin and date of claim.

2. Dates and times work was performed, and by whom.

3. Time records and wage rates paid.

4. Invoices and receipts for products, equipment, and subcontracts, similarly documented.

1.05 PRELIMINARY PROCEDURES

A. DEPARTMENT may submit a Proposal Request which includes: Detailed description of change with supplementary or revised Drawings and Specifications, the projected time for executing the change, with a stipulation of any overtime work required, and the period of time during which the requested price will be considered valid.

B. CONTRACTOR may initiate a change by submittal of a request to DEPARTMENT describing the proposed change with a statement of the reason for the change, and the effect on Contract Price and Contract Time with full documentation.

1.06 CONSTRUCTION CHANGE AUTHORIZATION

A. Shall be in accordance with Article 9 - Changes: in Document 00700 - General Conditions.

1.07 FIXED PRICE CHANGE ORDER

A. CONTRACTOR shall submit an itemized price proposal in sufficient detail to fully explain the basis for the proposal. Attach invoices and receipts for products, equipment, subcontracts and as requested by the DEPARTMENT. CONTRACTOR and the DEPARTMENT shall then negotiate an equitable price (and time adjustment if appropriate) in good faith. The Change Order will reflect the results of those negotiations. If negotiations break down CONTRACTOR may be directed to perform the work under COST OF THE WORK CHANGE ORDER.

1.08 UNIT PRICE CHANGE ORDER

A. For pre-determined Unit Prices and quantities, Change Order will be executed on a lump sum basis.

B. For unit costs or quantities of units of Work which are not predetermined, execute Work under a Directive. Changes in Contract Price or Contract Time will be computed as specified for cost of the Work plus fee via Change Order.

1.09 COST OF THE WORK CHANGE ORDER

A. CONTRACTOR shall submit documentation required in 1.04 on a daily basis for certification by the Project Manager. Project Manager will indicate by signature that the submitted documentation is acceptable.

B. After completion of the change and within 14 Calendar Days, unless extended by the Project Manager, the CONTRACTOR shall submit in final form an itemized account with support data of all costs. Support data shall have been certified by the Project Manager, as required above in paragraph A.

1.10 EXECUTION OF CHANGE ORDERS

A. DEPARTMENT will issue Change Orders for signatures of parties as provided in Conditions of the Contract.

1.11 CORRELATION OF CONTRACTOR SUBMITTALS

A. Promptly revise Schedule of Values and Application for Payment forms to record each authorized Change Order as a separate line item and adjust the Contract Price as shown on Change Order.

B. Promptly revise progress schedules to reflect any change in Contract Time, revise subschedules to adjust times for other items of Work affected by the change, and resubmit.

C. Promptly enter changes in project record documents.

PART 2 PRODUCTS Not Used

PART 3 EXECUTION Not Used

END OF SECTION

SECTION 01040
COORDINATION

PART 1 GENERAL

1.01 REQUIREMENTS INCLUDED

A. Coordination of Work of Contract.

1.02 RELATED REQUIREMENTS

A. Section 01010 - Summary of Work.

B. Section 01045 – Cutting and Patching.

C. Section 01200 – Project Meetings.

D. Section 01600 – Material and Equipment: Substitutions.

E. Section 10701 – Contract Closeout Procedures.

1.03 DESCRIPTION

A. Coordinate scheduling, submittals, and work of the various sections of Specifications to assure efficient and orderly sequence of installation of construction elements, with provisions for accommodating items to be installed later.

B. Coordinate sequence of Work to accommodate Using Agency occupancy as specified in Section 01005.

1.04 MEETINGS

A. Coordinate sequence of Work to accommodate Using Agency occupancy as specified in Section 01005.

1.05 COORDINATION OF SUBMITTALS

A. Schedule and coordinate submittals specified in Section 01300.

B. Coordinate Work of various sections having interdependent responsibilities for installing connecting to, and placing in service, such equipment.

C. Coordinated requests for substitutions to assure compatibility of space, of operating elements, and effect on Work of other sections.

1.06 COORDINATION OF SPACE

A. Coordinate use of Project space and sequence of installation of mechanical and electrical Work which is indicated diagrammatically on Drawings. Follow routings shown for pipes, ducts, and conduits as closely as practicable, with due allowance for available physical space; make runs parallel with lines of building. Utilize space efficiently to maximize accessibility for other installations, for maintenance, and for repairs.

B. In finished areas, except as otherwise shown, conceal pipes, ducts, and wiring in the construction. Coordinate locations of fixtures and outlets with finish elements.

1.07 COORDINATION OF CONTRACT CLOSEOUT

A. Coordinate completion and cleanup of Work of separate sections in preparation for Substantial Completion.

B. After Using Agency occupancy of premises, coordinate access to site by various sections for correction of Defective Work and Work not in accordance with Contract Documents, to minimize disruption of Using Agency activities.

C. Assemble and coordinate close submittal specified in Section 01701.

PART 2 PRODUCTS Not Used

PART 3 EXECUTION Not Used

END OF SECTION

SECTION 01045
CUTTING AND PATCHING

PART 1 GENERAL

1.01 REQUIREMENTS INCLUDED

A. Requirements and limitations for cutting and patching of Work.

1.02 RELATED REQUIREMENTS

A. Section 01005 – Administrative Provisions

B. Section 01010 - Summary of Work.

C. Section 01600 - Materials and Equipment: Substitutions.

D. Individual Specifications Sections:

1. Cutting and patching incidental to Work of the section.
2. Advance notification to other sections of openings required in Work of those sections.
3. Limitations on cutting structural members.

1.03 SUBMITTALS

A. Submit written request in advance of cutting or alteration which affects:

1. Structural integrity of any element of Project.
2. Integrity of weather-exposed or moisture-resistant element.
3. Efficiency, maintenance, or safety of any operational element.
4. Visual qualities of sight-exposed elements.
5. Work of DEPARTMENT or separate Contractor.

B. Include in request:

1. Identification of Project and DEPARTMENT's Project number.
2. Location and description of affected Work.
3. Necessity for cutting or alteration.
4. Description of proposed Work, and products to be used.
5. Alternatives to cutting and patching.
6. Effect on Work of DEPARTMENT or separate Contractor.
7. Written permission of affected separate Contractor.
8. Date and time Work will be executed.

PART 2 PRODUCTS

2.01 MATERIALS

A. Those required for original installation.

B. For any change in materials, submit request for substitution under provisions of Section 01600.

PART 3 EXECUTION

3.01 GENERAL

A. Execute cutting, fitting, and patching to complete Work, and to:

1. Fit the several parts together, to integrate with other Work.
2. Uncover Work to install ill-timed Work.
3. Remove and replace non-conforming and Defective Work.
4. Remove samples of installed Work for testing.
5. Provide openings in elements of Work for penetrations of mechanical and electrical Work.

3.02 INSPECTION

A. Inspect existing conditions, including elements subject to damage or movement during cutting and patching.

B. Notify the Department immediately of any suspected hazardous materials.

C. After uncovering, inspect conditions affecting performance of work.

D. Beginning of cutting or patching means acceptance of existing conditions.

3.03 PREPARATION

A. Provide supports to assure structural integrity of surroundings; devices and methods to protect other portions of Project from damage.

B. Provide protection from elements for areas which may be exposed by uncovering Work; maintain excavations free of water.

3.04 PERFORMANCE

A. Execute Work by methods to avoid damage to other Work, and which will provide proper surfaces to receive patching and finishing.

B. Cut rigid materials using masonry saw or core drill. Pneumatic tools not allowed without prior approval. Cutting structural reinforcement with heat is strictly forbidden without prior written approval.

C. Restore Work with new products in accordance with requirements of Contract Documents.

D. Fit Work tightly to pipes, sleeves, ducts, conduit, and other penetrations through surfaces.

E. At penetrations of fire-rated wall, ceiling, or floor construction, completely seal voids with fire-rated material, full thickness of the construction element or in accordance with listed U.L. assembly requirements.

F. Refinish surfaces to match adjacent finishes. For continuous surfaces, refinish to nearest intersection; for an assembly, refinish entire unit.

END OF SECTION

SECTION 01073
EXPLANATIONS: DRAWINGS AND SPECIFICATIONS

PART 1 GENERAL

1.1 REQUIREMENTS INCLUDED

A. Explanation of terminology used within the Drawings and Specifications.

1.2 RELATED REQUIREMENTS

A. Section 01005 - Administrative Provisions

B. Section 01010 - Summary of Work

C. Section 01020 - Intent of Documents

1.3 SPECIFICATION FORMAT AND COMPOSITION

A. Specifications are divided into Divisions and Sections for the convenience of writing and using. Titles are not intended to imply a particular meaning or to fully describe the Work of each Division or Section, and are not an integral part of the text that specifies the requirements. Contracting Officer is not bound to define the limits of any subcontract, and will not enter into disputes between the Contractor and his employees, including subcontractors.

B. Pages are numbered independently for each Section. Section number is shown with the page number at the bottom of each page. "End of Section" is noted on the last page of each Section. It is Contractor's responsibility to verify that Contract Documents received for bidding and construction are complete in accordance with Table of Contents.

C. These Specifications are of the abbreviated, or "streamlined" type, and include incomplete sentences.

D. Omissions of words or phrases such as "the Contractor shall," "in conformity therewith," "shall be," "as noted on the Drawings," "according to the Drawings," "a," "an," "the" and "all" are intentional.

E. Omitted words or phrases shall be supplied by inference in the same manner as they are when a "note" occurs on the Drawings.

1.4 DRAWINGS: CONTENT EXPLANATION

A. Where on any of the Drawings a portion of the Work is drawn out and the remainder is indicated in outline, the parts drawn out shall apply also to all other portions of the Work.

B. Wherever a detail is referenced and developed for a specific condition, same or similar detail shall apply to identical or similar conditions elsewhere on Project even though not specifically referenced.

C. Where the word "similar" occurs on the Drawings, it shall be interpreted in its general sense and not as meaning identical, all details shall be worked out in relation to their location and their connection with other parts of the Work.

D. The figured dimensions on the Drawings or notes indicating dimensions shall be used instead of measurements of the Drawings by scale. No scale measurements shall be used as a dimension.

E. Provide piping, ductwork, equipment, and accessories indicated on the Drawings unless it is specifically indicated that the piping, ductwork, equipment, or accessory is existing.

F. Unless otherwise indicated, abbreviations and symbols used in the Drawings and Specifications are intended to have the meaning commonly accepted in the construction industry. Contact the Contracting Officer for definition if any question arises concerning them.

G. Certain items used generally throughout the Specifications and Drawings are used as follows:

1. Indicated: The term "indicated" is a cross reference to details, notes or schedules on the Drawings, other paragraphs or schedules in the Specifications, and similar means of recording requirements in the Contract Documents. Where terms such as "shown", "noted", "schedules", and "specified" are used in lieu of "indicate", it is for the purpose of helping the reader accomplish the cross reference, and no limitation of location is intended except as specifically noted.

2. Installer: The person or entity engaged by Contractor, his subcontractor or sub-subcontractor for the performance of a particular unit of work at the Project site, including installation, erection, application, and similar required operations. It is a general requirement that installers be recognized experts in the Work they are engaged to perform.

3. Provide: Except to the extent further defined, the term "provide" means to supply and install, complete and ready for the intended use.

4. Furnish: Except as otherwise defined in greater detail, the term "furnish" is used to mean the same as "provide".

5. Guarantee and Warranty: "Warranty" is generally used in conjunction with products manufactured or fabricated away from the Project site, and "guarantee" is generally used in conjunction with units of work which require both products and substantial amounts of labor at the Project site. The resulting difference is that warranties are frequently issued by manufacturers, and guarantees are generally issued by Contractor and frequently supported (partially) by product warranties from manufacturers.

6. Work: Work is the act of, and the result of, performing services, furnishing labor, furnishing and incorporating materials and equipment into the Project and performing other duties and obligations, all as required by the Contract Documents. Such Work, however incremental, shall culminate in the entire completed Project, or the various separately identifiable parts thereof.

7. Contracting Officer: Contracting Officer means Contracting Officer or Contracting Officer's Representative.

1.5 CONFLICTS

A. Report any conflicts to Contracting Officer for clarification.

PART 2 PRODUCTS
[Not Used]

PART 3 EXECUTION
[Not Used]

END OF SECTION

SECTION 01090
REFERENCE STANDARDS

PART 1 GENERAL

1.01 REQUIREMENTS INCLUDED

A. Quality Assurance.

B. Applicability of Reference Standards.

C. Provision of Reference Standards at site.

D. Acronyms used in Contract Documents for Reference Standards. Source of Reference Standards.

1.02 RELATED REQUIREMENTS

A. Document 00700 - General Conditions: Paragraph 3.4.2.

1.03 QUALITY ASSURANCE

A. For products or workmanship specified by association, trade, or Federal Standards, comply with requirements of the standard, except when more rigid requirements are specified or are required by applicable codes.

B. The date of the standard is that in effect as of the Project Advertisement date, or Effective Date of the Contract when there was no Advertisement, except when a specific date is specified.

C. When required by an individual Specification section, obtain copy of standard. Maintain copy at site during submittals, planning, and progress of the specific Work, until Final Completion.

D. Should specified reference standards conflict with Contract Documents, request clarification from the Architect/Engineer before proceeding. Local code requirements, where more stringent than referenced standards, shall govern.

E. Neither the contractual relationship, duties, nor responsibilities of the parties in Contract nor those of the Architect/Engineer shall be altered by the Contract Documents by mention or inference otherwise in any reference document.

1.04 SCHEDULE OF REFERENCES

AA	Aluminum Association 818 Connecticut Avenue, N.W. Washington, DC 20006
AABC	Associated Air Balance Council 1000 Vermont Avenue, N.W. Washington, DC 20005
AASHTO	American Association of State Highway and Transportation Officials 444 North Capitol Street, N.W. Washington, DC 20001
ACI	American Concrete Institute Box 19150 Reford Station Detroit, MI 48219

ADC	Air Diffusion Council 230 North Michigan Avenue Chicago, IL 60601
AGC	Associated General Contractors America 1957 E Street, N.W. Washington, DC 20006
AI	Asphalt Institute Asphalt Institute Building College Park, MD 20740
AITC	American Institute of Timber Construction 333 W. Hampden Avenue Englewood, CO 80110
AISC	American Institute of Steel Construction 400 North Michigan Avenue Eighth Floor Chicago, IL 60611
AISI	American iron and Steel Institute 1000 16th Street, N.W. Washington, DC 20036
AMCA	Air Movement and Control Association 30 West University Drive Arlington Heights, IL 60004
ANSI	American National Standards Institute 1430 Broadway New York, NY 10018
APA	American Plywood Association Box 11700 Tacoma, WA 98411
ARI	Air-Conditioning and Refrigeration Institute 1815 North Fort Myer Drive Arlington, VA 22209
ASHRAE	American Society of Heating, Refrigeration and Air Conditioning Engineers 1791 Tullie Circle, N.E. Atlanta, GA 30329
ASME	American Society of Mechanical Engineers 345 East 47th Street New York, NY 10017
ASPA	American Sod Producers Association Association Building Ninth and Minnesota Hastings, NE 68901

ASTM	American Society for Testing and Materials 1916 Race Street Philadelphia, PA 19103
AWWA	American Water Works Association 6666 West Quincy Avenue Denver, CO 80235
AWI	Architectural Woodwork Institute 2310 South Walter Reed Drive Arlington, VA 22206
AWPA	American Wood-Preservers' Association 7735 Old Georgetown Road Bethesda, MD 20014
AWS	American Welding Society 550 LeJeune Road Miami, FL 33135
CDA	Copper Development Association 57th Floor, Chrysler Building 405 Lexington Avenue New York, NY 10174
CLFMI	Chain Link Fence Manufacturers Institute 1101 Connecticut Avenue, N.W. Washington, DC 20036
CRSI	Concrete Reinforcing Steel Institute 933 Plum Grove Road Schaumburg, IL 60195
EJMA	Expansion Joint Manufacturers Association 707 Westchester Avenue White Plains, NY 10604
FGMA	Flat Glass Marketing Association 3310 Harrison White Lakes Professional Building Topeka, KS 66611
FM	Factory Mutual System 1151 Boston-Providence Turnpike Norwood, MA 02062
FS	Federal Specification General Services Administration Specifications and Consumer Information Distribution Section (WFSIS) Washington Navy Yard, Building 197 Washington, DC 20407

GA	Gypsum Association 1603 Orrington Avenue Evanston, IL 60201
IEEE	Institute of Electrical and Electronics Engineers 345 East 47th Street New York, NY 10017
IMIAC	International Masonry Industry All-Weather Council International Masonry Institute 815 15th Street, N.W. Washington, DC 20005
MFMA	Maple Flooring Manufacturers Association 2400 East Devon Suite 205 Des Plaines, IL 60018
MIL	Military Specification Naval Publications and Forms Center 5801 Tabor Avenue Philadelphia, PA 19120
ML/SFA	Metal Lath/Steel Framing Association Metal Manufacturers 221 North LaSalle Street Chicago, IL 60601
NAAMM	National Association of Architectural Metal Manufacturers 221 North LaSalle Street Chicago, IL 60601
NEBB	National Environmental Balancing Bureau 8224 Old Courthouse Road Vienna, VA 22180
NEMA	National Electrical Manufacturers' Association 2101 L Street, N.W. Washington, DC 20037
NFPA	National Fire Protection Association Battery March Park Quincy, MA 02269
NFPA	National Forest Products Association 1619 Massachusetts Avenue, N.W. Washington, DC 20036
NSWMA	National Solid Wastes Management Association 1120 Connecticut Avenue, N.W. Washington, DC 20036
NTMA	National Terrazzo and Mosiac Association 3166 Des Plaines Avenue Des Plaines, IL 60018

PCA	Portland Cement Association 5420 Old Orchard Road Skokie, IL 60077
PCI	Prestressed Concrete Institute 201 North Wacker Drive Chicago, IL 60606
PS	Product Standard U.S. Department of Commerce Washington, DC 20203
RIS	Redwood Inspection Service One Lombard Street San Francisco, CA 94111
RCSHSB	Red Cedar Shingle and Handsplit Shake Bureau 515 116th Avenue Bellevue, WA 98004
SDI	Steel Deck Institute Box 3812 St. Louis, MO 63122
SDI	Steel Door Institute 712 Lakewood Center North Cleveland, OH 44107
SIGMA	Sealed Insulating Glass Manufacturers Association 111 East Wacker Drive Chicago, IL 60601
SJI	Steel Joist Institute 1703 Parham Road Suite 204 Richmond, VA 23229
SMACNA	Sheet Metal and Air Conditioning Contractors' National Association 8224 Old Court House Road Vienna, VA 22180
SSPC	Steel Structures Painting Council 4400 Fifth Avenue Pittsburgh, PA 15213
TAS	Technical Aids Series Construction Specifications Institute 601 North Madison Street Alexandria, VA 22314
TCA	Tile Council of America, Inc. Box 326 Princeton, NJ 08540

UL	Underwriters' Laboratories, Inc. 333 Pfingston Road Northbrook, IL 60062
WCLIB	West Cost Lumber Inspection Bureau Box 23145 Portland, OR 97223

PART 2 PRODUCTS (Not Used)

PART 3 EXECUTION (Not Used)

END OF SECTION

SECTION 01120
ALTERATION PROJECT PROCEDURES

PART 1 GENERAL

1.01 REQUIREMENTS INCLUDED

A. Procedural requirements.

B. Rehabilitation and renovation of existing spaces and materials.

1.02 RELATED REQUIREMENTS

A. Section 01005 - Administrative Provisions

B. Section 01010 – Summary of Work

C. Section 01045 - Cutting and Patching

PART 2 PRODUCTS

2.01 PRODUCTS FOR PATCHING AND EXTENDING WORK

A. New Materials: As specified in individual Specification Sections.

B. Match existing products and work for patching and extending Work.

C. Determine type and quality of existing products by inspection and any necessary testing, and workmanship by use of existing as a standard. Presence of a product, finish, or type of Work, requires that patching, extending, or matching shall be performed as necessary to make Work complete and consistent with existing quality and Contract Documents.

PART 3 EXECUTION

3.01 GENERAL

A. Remove existing work, materials and items as indicated on the Drawings, as required by job site conditions, as scheduled, and as specified herein, to accomplish new Work and alteration in the existing building.

B. Remove work carefully and only to the extent required for the final Work. Minimize damage to adjacent materials.

C. When portions of existing conditions are shown, it is not meant to indicate that all existing conditions are shown.

D. Patch existing surfaces which are made defective in appearance or function by the execution of Work.

E. Cut rigid materials using masonry saw or core drill. Pneumatic tools and electric hammers are not permitted.

F. Conduct all operations with a minimum of noise.

G. Take reasonable and adequate precautions to protect the Owner's property from

damage during demolition Work, moving of debris, and damage by the elements. Restore any damage to Owner property due to the aforesaid work or replace in a manner satisfactory to the Contracting Officer.

H. Provide and maintain suitable barricades, shelters, lights, and danger signals during the progress of the Work. Provide barricades meeting the requirements of the applicable building codes. Assume the responsibility of barriers to completion of Contract and remove at completion of Contract.

I. Locate penetrations to avoid structural members.

3.02 INSPECTION

A. Verify that demolition is complete, and areas are ready for installation of new Work.

B. Beginning of restoration Work means acceptance of existing conditions.

3.03 PREPARATION

A. Plan all work in advance, informing Contracting Officer of procedure and schedule.

B. Verify existing conditions affecting Work including existing sizes and materials indicated prior to beginning Work or ordering materials that are affected by existing conditions. Notify Contracting Officer of conflicts in writing.

C. Erect dust-proof partitions where demolition work is in progress and as directed. Such partitions shall remain in place until their removal is directed.

D. Where openings are to be cut in existing structures, cut such openings with care. Where materials, equipment, frames, etc., are to be removed, remove such items with care to minimize damage to adjacent materials.

E. Cut, move, or remove items as necessary for access to alterations and renovations Work; replace and restore at completion.

F. Cut pockets, openings, chases, depressions, etc., to install or allow for installation of materials or equipment.

G. Remove from site unsuitable material not marked for salvage, such as rotted wood, rusted metals, and deteriorated masonry and concrete; replace materials as specified for finished Work.

H. Remove from site, including concealed spaces, debris and abandoned items resulting from demolition operations from the site promptly. No accumulation of debris will be permitted.

I. Prepare surfaces and remove surface finishes to provide for proper installation of new Work and new finishes.

J. Close openings in exterior surfaces to protect existing work and salvage items from weather and extremes of temperature and humidity. Insulate ductwork and piping to prevent condensation in exposed areas.

3.04 INSTALLATION

A. Coordinate Work of alterations and renovations to expedite completion and to accommodate Owner occupancy. Remove, cut, and patch Work in a manner to

minimize damage and to provide means of restoring products and finishes to original condition.

B. Refinish visible existing surfaces to remain in renovated rooms and spaces with a neat transition to adjacent new finishes.

C. In addition to specified replacement of equipment restore existing mechanical and electrical systems to full operational condition.

D. Install products as specified in individual Specification Sections.

3.05 TRANSITIONS

A. Where new Work abuts or aligns with existing, make a smooth and even transition. Patched Work shall match existing adjacent work in texture and appearance.

B. When finished surfaces are cut so that a smooth transition with new Work is not possible, terminate existing surface along a straight line at a natural line of division and make recommendation to Contracting Officer.

3.06 ADJUSTMENTS

A. Where removal of partitions results in adjacent spaces becoming one, rework floors, walls, and ceilings to a smooth plane without breaks, steps, or bulkheads. Where a change of plane of 1/4 inch or more occurs, submit recommendation for providing a smooth transition for Contracting Officer review.

B. Trim existing doors as necessary to clear new floor finishes; refinish trimmed areas.

C. Fit Work at penetrations of surfaces as specified in Sections 01005 and 01045.

3.07 REPAIR OF DAMAGED SURFACES

A. Patch or replace portions of existing surfaces which are disturbed, damaged, or otherwise made defective in appearance or function by the execution of Work under this Contract. Restore to original condition.

B. Repair substrate prior to patching finish.

3.08 FINISHES

A. Finish surfaces as specified in individual Sections.

B. Finish patches to produce uniform finish and texture over entire area. When finish cannot be matched, refinish entire surface to nearest intersections.

3.09 CLEANING

A. In addition to cleaning specified in Section 01500, clean Owner occupied areas of Work daily.

B. After the demolition Work in any area is completed, clean the area before new construction is started.

END OF SECTION

SECTION 01126 - CONTRACTOR'S CERTIFICATION OF SUBCONTRACTS

PART 1 GENERAL

1.1 SECTION INCLUDES

A. Procedures for preparing, submitting and accepting subcontracts.

1.2 RELATED REQUIREMENTS

A. Bidding and Contract Requirement Document 00100 - Instructions to Bidders, Requirements of Apparent Low Bidder.

B. Bidding and Contract Requirement Document 00101 – Supplemental Information to Bidders.

C. Bidding and Contract Requirement Document 00430 - Subcontractor List

D. Bidding and Contract Requirement Section 00700 - General Conditions: Article 6.13 - Subcontractors.

E. Bidding and Contract Requirement Section 00800 – Supplementary Conditions: Paragraph SC-6.13 – Replacing Subcontractors

F. Section 01300 - Submittals: Submittal Procedures.

G. Section 01305 – Submittal Register Form.

1.3 SUBMITTALS

A. Submit under transmittal letter specified in Section 01300 Submittals.

B. CONTRACTOR shall submit the initial and final Subcontractor Certification Form(s).

1.4 PREPARATION OF CERTIFICATION

A. CONTRACTOR to prepare and sign certification forms for all subcontractors regardless of subcontract amount (see Section 00700, Paragraph 6.13.1).

B. Submit certification form to the DEPARTMENT for approval prior to the subcontractor's start of work. Attach additional information to the certification form where required,

C. Certification Forms: Use only forms provided by the DEPARTMENT.

D. The DEPARTMENT will reject substitute certification forms.

1.5 CONSIDERATION OF CERTIFICATION

A. The DEPARTMENT will review each certification form after receipt and within a reasonable period of time, for the following:

1. Completeness, including the attachments.
2. Proper execution (signatures), including the attachments.
3. Contractor restrictions for adding subcontractors, changing subcontractors, and value of contract.

B. The DEPARTMENT will return any submittals that are incomplete or not properly executed under a transmittal letter denoting the deficiencies found. The CONTRACTOR shall correct and resubmit according to Section 01300 Submittals.

C. SUBCONTRACTORS NOT APPROVED BY THE DEPARTMENT SHALL NOT BE ALLOWED ON SITE.

D. The DEPARTMENT will not process payments for work performed by a non-certified subcontractor.

1.6 ACKNOWLEDGEMENT OF CERTIFICATION

A. Submittals examined by the DEPARTMENT and determined to be complete and properly executed shall be acknowledged as such by the DEPARTMENT on the approval line of the certification form and returned to the CONTRACTOR.

1.7 CHANGES TO APPROVED SUBCONTRACTORS LIST

A. Deletion or replacement of subcontractors listed on approved form 06D-5, or the addition of subcontractors not listed on approved form 06D-5 shall be in accordance with Bidding and Contract Requirement Document 00101, Supplementary Information to Bidders.

PART 2 PRODUCTS

Not Used

PART 3 EXECUTION

Not Used

END OF SECTION 01126

STATE OF ALASKA Department of Health & Social Services FMS Facilities	SUBCONTRACTOR CERTIFICATION	

Note: The Contractor shall provide this form for ALL subcontractors working on this project. This form is applicable to all projects, including Small Procurement Contracts, and must be completed in full.

PROJECT: **McLaughlin Youth Center AHU Upgrades** PROJ. #: **ANC 15-04C**

PRIME CONTRACTOR: _____

Pursuant to the Contract Documents, we hereby stipulate the following concerning the award of Work to the last Subcontractor on the following list:

1. First Tier Subcontractor: _____ DBE? **Yes**☐ **No**☐

   Second Tier: _____ DBE? **Yes**☐ **No**☐

   Third Tier: _____ DBE? **Yes**☐ **No**☐

   Fourth Tier: _____ DBE? **Yes**☐ **No**☐

2. Date of Subcontract: _____

3. Amount of Subcontract: $ _____

4. Scope of Work: _____

   _____

   _____

5. Are the following documents kept on file by both the Contractor and the Subcontractor (check the appropriate answer)?

   EEO-1 Certification (Form 25A304), federally funded projects only **Yes**☐ **No**☐
   Contract Minimum Wage Schedule **Yes**☐ **No**☐
   Civil Rights Representative (Form 25A302) **Yes**☐ **No**☐

6. Does the Subcontract contain provisions for prompt payment, release of retainage, and interest on late payment and retainage conforming to AS 36.90.210?

   Yes☐ **No**☐

7. Does the Subcontract specifically bind the Subcontractor to the applicable terms and conditions of the Contract Documents for the benefit of the Department and does it contain waiver provisions and termination provisions as required by the Contract Documents?

   Yes☐ **No**☐

8. a. Does the Subcontractor have adequate insurance coverages as specified in the Contract Documents?

   Yes☐ **No**☐

   If not, does the Contractor stipulate that the insurance limits of the Subcontractor are acceptable to the Contractor and that he has notified his insurance carrier of the reduced insurance limits?

   Yes☐ **No**☐

   b. Does the evidence of insurance certify that the policies described thereon comply with all aspects of the insurance requirements for this project?

   Yes☐ **No**☐

PROJECT: **McLaughlin Youth Center AHU Upgrades** **PROJECT #:** **ANC 15-04C**

Subcontractor Name: _____

c. Does the evidence of insurance list the Department as an "Additional Insured" or "Certificate Holder"?

Yes☐ **No**☐

d. Does the evidence of insurance commit to providing 30 day written notice of cancellation or reduction of any coverage?

Yes☐ **No**☐

e. Insurance Expiration dates:

Comprehensive or Commercial General Liability: _____

Automobile: _____ Workers' Compensation: _____

(Other): _____

9. Copies of the following professional certifications, licenses, and registrations are attached (circle all that apply):

Business License (mandatory)
Contractor License (mandatory)
Land Surveyor's License
Electrical Administrator's License (mandatory for electrical subs)
Mechanical Administrator's License (mandatory for mechanical subs)
Engineer/Architect
Other: _____

10. Exceptions to any of the above are explained as follows: _____

_____

CERTIFICATION (to be completed and signed by PRIME CONTRACTOR): I certify all the above to be true and correct.

CONTRACTOR'S Signature: _____

CONTRACTOR'S Printed Name: _____

CONTRACTOR'S Company: _____

Date: _____

DEPARTMENT'S APPROVAL/DISAPPROVAL

The subject subcontract is **APPROVED**. Nothing in this approval should be construed as relieving the Prime Contractor of the responsibility for complete performance of the work or as a waiver of any right of the Department to reject defective work.

SIGNATURE: _____ **DATE:** _____

FMS Facilities Contracting Officer

The subject subcontract is **NOT APPROVED** for the following reasons:

_____

_____

SIGNATURE: _____ **DATE:** _____

Mark Moon, Project Manager

SECTION 01200
PROJECT MEETINGS

PART 1 GENERAL

1.01 REQUIREMENTS INCLUDED

A. CONTRACTOR participation in preconstruction conferences.

B. CONTRACTOR administration of progress meetings.

1.02 RELATED REQUIREMENTS

A. Document 00120 - Supplementary Instructions to Bidders: Pre-Bid Conference.

B. Section 01010 – Summary of Work: Coordination.

C. Section 01300 - Submittals: Construction Progress Schedules, Shop drawings, Product data, and Samples.

D. Section 01400 - Quality Control.

E. Section 01700 - Contract Closeout: Project Record Documents, Operation and Maintenance Data.

1.03 PRECONSTRUCTION CONFERENCES.

A. DEPARTMENT will administer preconstruction conference for execution of Contract and exchange of preliminary submittals and review of administrative procedures.

B. DEPARTMENT will administer site mobilization conference at Project site for clarification of CONTRACTOR responsibilities in use of site and coordination with Using Agency for occupancy throughout the duration of the work. CONTRACTOR shall provide the detailed written work plan in preparation for this meeting.

1.04 PROGRESS MEETINGS

A. Contractor shall schedule and administer weekly Project meetings throughout progress of the Work (unless this requirement is waived by the Project Manager), and other meetings as required to coordinate work, and preinstallation conferences.

B. Attendance: Job superintendent, major Subcontractors and Suppliers; DEPARTMENT and Consultants as appropriate to agenda topics for each meeting.

C. Minimum Required Agenda: Review of Work progress, status of progress schedule and adjustments thereto, Work anticipated in the next week, delivery schedules, submittals, maintenance of quality standards, pending changes and substitutions, and other items affecting progress of Work.

PART 2 PRODUCTS Not Used

PART 3 EXECUTION Not Used

END OF SECTION

SECTION 01230
ALTERNATES

PART 1 GENERAL

1.01 SUMMARY

A. This Section includes administrative and procedural requirements for alternates.

1.02 DEFINITIONS

A. Alternate: An amount proposed by bidders and stated on the Bid Form for certain work defined in the Bidding Requirements that may be added to or deducted from the Base Bid amount if Owner decides to accept a corresponding change either in the amount of construction to be completed or in the products, materials, equipment, systems, or installation methods described in the Contract Documents.

1. The cost or credit for each alternate is the net addition to or deduction from the Contract Sum to incorporate alternate into the Work. No other adjustments are made to the Contract Sum.

1.03 PROCEDURES

A. Coordination: Modify or adjust affected adjacent work as necessary to completely integrate work of the alternate into Project.

1. Include as part of each alternate, miscellaneous devices, accessory objects, and similar items incidental to or required for a complete installation whether or not indicated as part of alternate.

B. Notification: Immediately following award of the Contract, the owner will notify each party involved, in writing, of the status of each alternate. Indicate if alternates have been accepted, rejected, or deferred for later consideration. Include a complete description of negotiated modifications to alternates.

C. Execute accepted alternates under the same conditions as other work of the Contract.

D. Schedule: A Schedule of Alternates is included at the end of this Section. Specification Sections referenced in schedule contain requirements for materials necessary to achieve the work described under each alternate.

PART 2 PRODUCTS (Not Used)

PART 3 EXECUTION

3.01 SCHEDULE OF ALTERNATES: See Drawings for further details

A. Additive Alternate # 1: Conversion of Johnson Controls DDC Graphics to Siemens DDC System and additional DDC points for heat exchanger pumps.

B. Additive Alternate # 2: Installing mechanical cooling in the air handlers serving the Probation Wing.

C. Additive Alternate # 3: Detention core lights and receptacles.

END OF SECTION

SECTION 01300
SUBMITTALS

PART 1 GENERAL

1.01 REQUIREMENTS INCLUDED

A. Procedures.

B. Construction Progress Schedules.

C. Schedule of Values.

D. Shop Drawings, Product Data, and Samples.

E. Field Samples.

1.02 RELATED REQUIREMENTS

A. Section 01010 - Summary of Work.

B. Section 01027 - Applications for Payment.

C. Section 01400 - Quality Control: Manufacturers' Field Services, Testing Laboratory Services.

D. Section 01600 - Material and Equipment: Products List.

E. Section 01700 - Contract Closeout: Closeout Procedures.

1.03 PROCEDURES

A. Deliver submittals to DEPARTMENT as directed.

B. Transmit each item under DEPARTMENT accepted form. Identify Project, CONTRACTOR, Subcontractor, Major Supplier, identify pertinent Drawing sheet and detail number, and Specification section number, as appropriate. Identify deviations from Contract Documents by submitting a DEPARTMENT supplied Substitution Request Form. Provide a minimum of 8 1/2" x 5 1/2" blank space on the front page for CONTRACTOR, and Consultant review stamps.

C. Submit initial progress schedules and Schedule of Values in five copies in accordance with paragraph SC6.6 of Document 00800 - Supplementary Conditions prior to submitting first Application for Payment. Form and content shall be reviewed by the DEPARTMENT. After review by DEPARTMENT revise and resubmit as required. Submit subsequent updated schedules (10) days prior to each Application for Payment.

D. Comply with progress schedule for submittals related to Work progress. Coordinate submittal of related items.

E. After DEPARTMENT review of submittal, revise and resubmit as required, identifying changes made since previous submittal. Provide total number of submittals as required for the first submission, if 6 are required and 4 were returned for revisions, submit 6 again. The DEPARTMENT and Consultants will not return the first or revised copies of rejected submittals for re-use. DO NOT submit partial copies of submittals for incorporation into rejected submittal packages which have been kept by the DEPARTMENT and/or Consultants. Provide COMPLETE copies for each review.

F. If drawings, product submittals, samples, mock-ups, or other required submittals are incomplete or not properly submitted, the DEPARTMENT will not review the submittal and will immediately return submittal to CONTRACTOR. DEPARTMENT will review a

submittal no more than three times (incomplete or improper submittals count as one). CONTRACTOR shall pay all review costs associated with more than three reviews, unless a resubmittal is required due to new comments addressing previously submitted information.

1.04 CONSTRUCTION PROGRESS SCHEDULES

A. Submit horizontal bar Gantt chart (see below for electronic version requirements). Schedule shall show:

1. Separate bar for each major trade or operation, identifying the duration of each activity and precedent activities.
2. Complete sequence of construction by activity, identifying Work of separate stages and other logically grouped activities. Show each work plan and separate work area as a separate activity or group of activities.
3. Submittal dates for required for Shop Drawings, product data, and samples, and product delivery dates, including those furnished by DEPARTMENT and those under allowances.
4. All required submittals and indicating the date for each required submittal.
5. Show projected percentages of completion for each item of Work and submittal as of time of each Application for Progress Payment. See below for electronic version requirements.
6. **ELECTRONIC VERSION: REQUIRED FOR ALL PROJECTS WHEN THE ORIGINAL CONTRACT AMOUNT IS EQUAL TO OR GREATER THAN $500,000.00.** Submit Progress Schedule plotted on paper no larger than 24" x 36" and no smaller than 8 1/2" x 11" from the electronic program. Provide in electronic form on CD for IBM and compatible using Microsoft Project 2000 version 9.0. CD will not be returned by the DEPARTMENT.
7. Submit Progress Schedule percentages in Tracking Gantt form plotted from and in electronic form as stated above.

1.05 SCHEDULE OF VALUES

A. FORMAT

1. Form and content must be acceptable to DEPARTMENT.
2. CONTRACTOR's standard form or media-driven printout will be considered on request.
3. Follow table of contents of Project manual for listing component parts. Identify each line item by number and title of listed Specification sections.

B. CONTENT

1. List installed value of each major item of Work and each subcontracted item of Work as a separate line item to serve as a basis for computing values for progress payments. Round off values to nearest dollar.
2. For each major subcontract, list products and operations of that subcontract as separate line items.
3. Coordinate listings with progress schedule.
4. Component listings shall each include a directly proportional amount of CONTRACTOR's overhead and profit.

5. For items on which payments will be requested for stored products, list sub-values for cost of stored products with taxes paid.

6. Specific line item Values as indicated below shall be minimum acceptable amounts and must be included on all approved Schedules of Values and Applications for Payment.

    a. **Section 01700 - Contract Closeout. Value of all required Substantial Completion Submittals and Closeout Submittals shall be not less than 10% of the final contracted amount.**

    b. No progress payments will be made for Substantial Completion Submittals and Closeout Submittals until **all** submittals have been submitted to and accepted by the DEPARTMENT.

7. The sum of values listed shall equal total Contract Price.

C. SUBMITTAL

1. Submit four copies of Schedule prior to submitting the CONTRACTOR's first Application for Payment. Subsequent updated Schedule of Values shall be presented for review ten days prior to each Application for Payment.

2. Transmit under DEPARTMENT accepted form transmittal letter. Identify Project by DEPARTMENT title and Project number; identify Contract by DEPARTMENT Contract number.

D. SUBSTANTIATING DATA

1. When DEPARTMENT requires substantiating information, submit data justifying line item amounts in question.

2. Provide one copy of data with cover letter for each copy of the Application for Payment. Show application number and date, and line item by number and description.

1.06 SHOP DRAWINGS, PRODUCT DATA AND SAMPLES

A. SHOP DRAWINGS:

1. Present in a clear and thorough manner. Label each Shop Drawing with DEPARTMENT's Project name and Project number; identify each element of the Shop Drawings by reference to sheet number and detail, schedule, or room number of Contract Documents.

2. Identify field dimensions; show relation to adjacent or critical features or Work or products.

3. Minimum Sheet Size: 8-1/2"x11". Larger sheets may be submitted in multiples of 8-1/2"x11".

B. PRODUCT DATA

1. Submit only pages which are pertinent; mark each copy of standard printed data to identify pertinent products, referenced to Specification section and Article number. Show reference standards, performance characteristics, and capacities; wiring and piping diagrams and controls; component parts; finishes; dimensions; and required clearances.

2. Modify manufacturer's standard schematic drawings and diagrams to supplement standard information and to provide information specifically applicable to the Work. Delete information not applicable.

C. SAMPLES

1. Submit full range of manufacturer's standard finishes except when more restrictive requirements are specified, indicating colors, textures, and patterns, for DEPARTMENT selection.

2. Submit samples to illustrate functional characteristics of products, including parts and attachments.

3. Approved samples, which may be used in the Work, are indicated in the Specification section.

4. Label each sample with identification required for transmittal letter.

5. Provide field samples of finishes at Project, at location acceptable to DEPARTMENT, as required by individual Specification section. Install each sample complete and finished. Acceptable finishes in place may be retained in completed Work.

D. MANUFACTURER'S INSTRUCTIONS

1. When required in individual Specification Section, submit manufacturer's printed instructions for delivery, storage, assembly, installation start-up, adjusting, and finishing, in quantities specified for product data.

2. Manufacturer's instructions for storage, preparation, assembly, installation, start-up, adjusting, balancing, and finishing under provisions of Section 01400.

E. CONTRACTOR REVIEW

1. Review submittals prior to transmittal; determine and verify field measurements, field construction criteria, manufacturer's catalog numbers, and conformance of submittal with requirements of Contract Documents.

2. Coordinate submittals with requirements of Work and of Contract Documents.

3. Sign or initial each sheet of Shop Drawings and product data, and each sample label to certify compliance with requirements of Contract Documents. Notify DEPARTMENT in writing at time of submittal, of any deviations from requirements of Contract Documents.

4. Do not fabricate products or begin Work that requires submittals until return of submittal with DEPARTMENT acceptance.

F. SUBMITTAL REQUIREMENTS

1. Each submittal to be numbered by Specification Section and Paragraph. Revisions shall be identified by a hyphen after the paragraph, with a letter designator. Example: 1st submittal "01010 1.08A" 2nd submittal 01010 1.08A - A".

2. Transmit submittals in accordance with the required submittal schedule and in such sequence to avoid delay in the Work.

3. Provide 8 1/2" x 5 1/2" blank space on each submittal for CONTRACTOR and Consultant stamps.

4. Apply CONTRACTOR'S stamp, signed or initialed, certifying to review, verification of products, field dimensions and field construction criteria, and coordination of information with requirements of Work and Contract Documents.

5. Coordinate submittals into logical groupings to facilitate interrelation of the several items:

a. Finishes which involve DEPARTMENT selection of colors, textures, or patterns.

b. Associated items that require correlation for efficient function or for installation.

6. Submit number of opaque reproductions of shop drawings CONTRACTOR requires, plus six that will be retained by DEPARTMENT.

7. Submit number of copies of product data and manufacturer's instructions CONTRACTOR requires, plus three copies, which will be retained by DEPARTMENT.

8. Submit number of samples specified in individual Specifications sections.

9. Submit under DEPARTMENT accepted transmittal form letter. Identify Project by title and DEPARTMENT Project number; identify Contract by DEPARTMENT contract number. Identify Work and product by Specification section and Article number.

10. Each submittal shall have as its face document a completed DEPARTMENT furnished Submittal Summary form.

11. Each submittal shall include the manufacturer's name and address, and supplier's name, address and telephone number.

G. RESUBMITTALS

1. After DEPARTMENT review of submittal, revise and resubmit as required, identifying changes made since previous submittal. Provide total number of submittals as required for the first submission, if 6 are required and 4 were returned for revisions, submit 6 again. The DEPARTMENT and Consultants will not return the first or revised copies of rejected submittals for re-use. DO NOT submit partial copies of submittals for incorporation into rejected submittal packages which have been kept by the DEPARTMENT and/or Consultants. Provide COMPLETE copies for each review.

H. DEPARTMENT REVIEW

1. DEPARTMENT or authorized agent will review Shop Drawings, product data, and samples and return submittals within (14) working days.

2. DEPARTMENT or authorized agent will examine shop drawings for general arrangement, overall dimensions and suitability, and will return to the CONTRACTOR marked as follows;

- "No Exceptions Taken" - denotes that the submittal generally meets the requirements of the Contract Documents. "No Exceptions Taken" does not indicate a review of the CONTRACTOR's design except for general compliance with the requirements of the Contract Documents.

- "Make Corrections Noted" - denotes review is conditional on compliance with notes made on the submittal.

- "Revise and Resubmit" - denotes that revisions are required in the submittal in order for the submittal to be generally consistent with the requirements of the Contract Documents. Required revisions will be identified to the CONTRACTOR.

- "Rejected" - denotes that the submittal does not meet the requirements of the Contract Documents and shall not be used in the Work. Reasons for rejection will be identified to the CONTRACTOR.

3. Review by the DEPARTMENT of shop and erection drawings shall not be construed as a complete check, but will indicate only that the general method of construction and detailing is consistent with the requirements of the Contract Documents. Review of such drawings shall not relieve the CONTRACTOR of the responsibility for errors, dimensions, and detail design.

4. DEPARTMENT will require submittal of all required color and finish samples in order to approve any on color or finish.

I. DISTRIBUTION

1. Duplicate and distribute reproductions of Shop Drawings, copies of product data, and samples, which bear Consultant's stamp, to job site file, record documents file, Subcontractors, Suppliers, and other entities requiring information.

J. SCHEDULE OF SUBMITTALS

1. Submittal Register Form to be completed by CONTRACTOR and approved by DEPARTMENT prior to submittal of any items.

2. Submit shop drawings, product data and samples as required for each specification section.

3. Format.

a. Submittal schedule form as provided by DEPARTMENT.

1.07 FIELD SAMPLES

A. Provide field samples of finishes at Project as required by individual Specifications section. Install sample complete and finished. Acceptable samples in place may be retained in completed Work.

PART 2 PRODUCTS Not Used

PART 3 EXECUTION Not Used

END OF SECTION

SECTION 01400
QUALITY CONTROL

PART 1 GENERAL

1.01 REQUIREMENTS INCLUDED

A. General Quality Control.

B. Workmanship.

C. Manufacturer's Instructions.

D. Manufacturer's Certificates.

E. Mockups.

F. Manufacturers' Field Services.

G. Testing Laboratory Services.

H. Departmental Inspection Services.

1.02 RELATED REQUIREMENTS

A. Document 00700 - General Conditions: Inspection and testing required by governing authorities.

B. Section 01010 – Summary of Work: Work Plans and Access to Facility, Individual Work Areas, and Tests required for inspection of the existing roof deck and structural members.

C. Section 01090 - Reference Standards: Applicability of Reference Standards.

D. Section 01300 - Submittals: Shop Drawings, Product Data, and Samples

1.03 QUALITY CONTROL, GENERAL

A. Maintain quality control over Suppliers, manufacturers, products, services, site conditions, and workmanship, to produce Work of specified quality.

1.04 WORKMANSHIP

A. Comply with industry standards except when more restrictive tolerances or specified requirements indicate more rigid standards or more precise workmanship.

B. Perform Work by persons qualified to produce workmanship of specified quality.

C. Secure products in place with positive anchorage devices designed and sized to withstand stresses, vibration, and racking.

1.05 MANUFACTURERS' INSTRUCTIONS

A. Comply with instructions in full detail, including each step in sequence. Should instructions conflict with Contract Documents, request clarification from DEPARTMENT before proceeding.

1.06 MANUFACTURERS' CERTIFICATES

A. When required by individual Specifications section, submit manufacturer's certificate, in duplicate, that products meet or exceed specified requirements.

1.07 MOCKUPS

A. When required by individual Specifications section, erect complete, full-scale mockup of assembly at site, perform required tests, and remove mockup at completion, when approved by DEPARTMENT.

1.08 MANUFACTURERS' FIELD SERVICES

A. When required by manufacturer or when specified in respective Specification sections, require manufacturer to provide qualified personnel to observe field conditions, conditions of surfaces and installation, quality of workmanship, start-up of equipment, test, adjust and balance of equipment as applicable, and to make appropriate recommendations.

B. Require manufacturer's representative to submit written report to DEPARTMENT listing observations and recommendations.

PART 2 PRODUCTS Not Used

PART 3 EXECUTION Not Used

END OF SECTION

SECTION 01500
CONSTRUCTION FACILITIES AND TEMPORARY CONTROLS

PART 1 GENERAL

1.01 REQUIREMENTS INCLUDED

A. Electricity, Lighting.

B. Heat, Ventilation.

C. Telephone Service.

D. Water.

E. Sanitary Facilities.

F. Dust Control (Exterior).

G. Construction Enclosures.

H. Barriers.

I. Barricades, Warnings, and Markings (Airport Operations).

J. Protection of Installed Work.

K. Security.

L. Water Control.

M. Cleaning During Construction.

N. Removal.

O. Waste Storage Equipment.

P. Cleaning of the Project Area.

Q. Disposal.

R. Tool Control

1.02 RELATED REQUIREMENTS

A. Section 01010 - Summary of Work: Use of Premises.

B. Section 01010 - Summary of Work: Shutoffs and Disruptions to Service.

C. Section 01540 - Security.

D. Section 01700 - Contract Closeout: Final cleaning.

1.03 ELECTRICITY, LIGHTING

A. Connect to existing service, provide branch wiring and distribution boxes located to allow service and lighting by means of construction-type power cords. DEPARTMENT will pay costs of energy used.

B. Provide lighting for construction operations.

C. Take precautions to conserve energy. Wasteful use of power will be back charged to the CONTRACTOR.

1.04 HEAT, VENTILATION

A. Provide as required to maintain specified conditions for construction operations, to protect materials and finishes from damage due to temperature or humidity.

B. Do not use permanent facilities for temporary purposes.

C. Fully exhaust to the outside welding fumes generated from operations related to performance of the Work.

D. Provide ventilation of enclosed areas to cure materials, to disperse humidity, and to prevent accumulations of dust, fumes, vapors, or gases.

1.05 TELEPHONE SERVICE

A. Provide telephone service if required for construction operations.

1.06 WATER

A. Provide service required for construction operations. Extend branch piping with outlets located so that water is available by use of hoses.

B. The DEPARTMENT will pay for water used.

C. Hoses or temporary piping will not be permitted in public areas where a hazard to the public may be created.

1.07 SANITARY FACILITIES

A. Designated existing facilities may be used during construction operation; maintain in clean sanitary condition. Do not use facilities for construction for cleaning of construction equipment.

1.08 DUST CONTROL

A. Execute Work by methods that minimize raising of dust or airborne debris from construction or demolition operations

B. Provide positive means to prevent air-borne dust from dispersing into the atmosphere

1.09 CONSTRUCTION ENCLOSURES

A. Provide temporary enclosures/partitions around areas inside the facility that are affected by the construction. Enclosures/partitions shall:

1. Isolate construction from Using Agency and residents. Enclosure/partitions must be secured with a padlock.

2. Prevent the penetration of dust and/or moisture into occupied areas. Partitions must be sealed at ceiling and floor.

3. Prevent damage to existing materials, finishes, and equipment or other existing building components and contents.

4. Be designed and stamped by an engineer licensed by the State of Alaska if over 12 feet high.

5. Be constructed of metal studs, painted GWB, 10 mil polyethylene, and sound attenuation insulation. Enclosures/Partitions shall extend from floor to ceiling with complete closure at adjoining walls.

B. The CONTRACTOR shall include his plan for construction enclosures in the work plan prepared under Section 01010.

1.10 BARRIERS

A. Provide as required to prevent public entry to construction areas and to protect existing facilities and adjacent properties from damage from construction operations.

B. Provide barriers to provide both separation and safety to adjacent building occupants..

1.11 PROTECTION OF INSTALLED WORK

A. Provide temporary protection for installed products. Control traffic in immediate area to minimize damage.

B. Provide protective coverings at walls, projections, jambs, sills, and soffits of openings. Protect finished floors and stairs from traffic, movement of heavy objects, and storage.

1.12 SECURITY.

A. Provide security program and facilities to protect Work, existing facilities, and Using Agency's operations from unauthorized entry, vandalism, and theft. Coordinate with DEPARTMENT security program.

1.13 WATER CONTROL

A. Protect the interior of the facility from water and/or moisture infiltration

1.14 CLEANING DURING CONSTRUCTION

A. In accordance with Part 2 and Part 3 of this specification.

1.15 REMOVAL

A. Remove temporary materials, equipment, services, and construction prior to Substantial Completion inspection.

B. Clean and repair damage caused by installation or use of temporary facilities.

C. Restore existing facilities used during construction to specified, or to original, condition.

PART 2 PRODUCTS

2.01 WASTE STORAGE EQUIPMENT

A. Provide covered containers for deposit of materials, waste materials, debris, and rubbish.

PART 3 EXECUTION

3.01 CLEANING OF THE PROJECT AREA

A. Maintain all areas under CONTRACTOR's control free of waste materials, debris, and rubbish. Maintain site in a clean and orderly condition.

B. Remove debris and rubbish from pipe chases, plenums, attics, crawl spaces, and other closed or remote spaces, prior to closing the space.

C. Immediately clean interior areas after completion of the work to provide suitable conditions for building occupants and residents. All resident occupied areas and areas used by the general public require cleanup at the end of each shift.

D. Broom clean interior areas prior to start of surface finishing, and continue cleaning on an as needed basis.

E. Control cleaning operations so that dust and other particulates will not adhere to wet or newly-coated surfaces.

3.02 DISPOSAL

A. Promptly remove waste materials, debris, and rubbish from site periodically and dispose of in accordance with all Federal, State and local regulations.

END OF SECTION

SECTION 01540
SECURITY

PART 1 GENERAL

1.01 REQUIREMENTS INCLUDED

A. Security Check

B. Facility Liaison

C. Personnel Access

D. Contraband

E. Tool Control

1.02 RELATED REQUIREMENTS

A. Section 01010 - Summary of Work.

B. Section 01500 - Construction Facilities and Temporary Controls.

PART 2 PRODUCTS Not Used.

PART 3 EXECUTION

3.01 SECURITY CHECK

A. All personnel will be required to undergo a security check prior to commencement of work.

B. The security check will look for recent or frequent past convictions or for outstanding warrants. The Department of Health & Social Services reserves the right to disqualify anyone from access to the work site. A past conviction will not automatically disqualify.

3.02 FACILITY LIAISON

A. A staff person will be assigned to act as the liaison with the contractor and the facility.

B. In the event of an emergency affecting the secure operations of the youth facility, the liaison is authorized to direct the contractor to take appropriate action. The directions of the liaison will be followed immediately. This provision supplements Article 6.19 of the General Conditions of the construction contract for facilities.

C. The liaison shall be briefed each week by the contractor regarding the contractor's work requirements and weekly work plan for the subsequent week.

3.03 PERSONNEL ACCESS

A. All access to the work site, which is within a youth facility, will be monitored and controlled by the Department of Health & Social Services in order to prevent importation of contraband and escape of residents.

B. Contractors, subcontractors, and employees may be denied access or be removed from the facility for the following reasons:

1. Contractors or workers that are incompetent, careless or otherwise detrimental to the work or the security of the facility.

2. Security requirements.
3. Disruptive, abrasive, and/or argumentative conduct.
4. Possession or being under the influence of alcohol, drugs and/or any substance that is considered contraband by the facility (including use of tobacco products).
5. Refusal to submit to search of personal property/belongings or themselves.
6. Health problems.
7. Failure to show proper identification.
8. Failure to follow the direction of youth facility officers and/or staff members.
9. Having any contact or interaction with inmates.
10. Failure to pass security check.

3.04 CONTRABAND

A. The mailing, bartering, introducing, exchanging, or buying of items between residents and contractors or their employees is strictly prohibited without the written consent of the superintendent of the institution.

Title II - Alaska Statutes Section 11.56.375. Promoting contraband in the first degree.

(1) A person commits the crime of promoting contraband in the first degree if the person violates AS 11.56.380 and the contraband is
(2) a deadly weapon;
(3) an article that is intended by the defendant to be used as a means of facilitating an escape; or
(4) a controlled substance.

B. Promoting contraband in the first degree is a class C felony

Section 11.56.380. Promoting contraband in the second degree.

a. A person commits the crime of promoting contraband in the second degree if the person:
   (1) introduces, takes, conveys, or attempts to introduce, take or convey contraband into a facility; or
   (2) makes, obtains, possesses, or attempts to make, obtain, or possess anything that person knows to be contraband while under official detention within a correctional facility.
b. Promoting contraband in the second degree is a class A misdemeanor.

Section 11.56.390. Definition.

In AS 11.56300 - 11.56.390, "contraband" means any article or thing which persons confined in a correctional facility are prohibited by law from obtaining, making, or possessing in that correctional facility.

C. Contractor is hereby advised that all personnel working at the site will be required to sign a statement that they fully understand sections 3.03 and 3.04 referenced above.

3.05 TOOL CONTROL

A. Do not leave accessible work areas of the youth facility unattended without first removing or securing all tools and objects which would be considered contraband. Tools will be confiscated and the contractors' personnel responsible will be removed

from the site.

3.06 DEPARTMENT OF HEALTH & SOCIAL SERVICES
DIVISION OF JUVENILE JUSTICE YOUTH CORRECTION SECURITY CLEARANCE PROCEDURES

A. The following documents pertain to mandatory security background checks for anyone going to work inside a youth detention facility. This is a requirement and the paperwork must be processed prior to anyone going to work at the facility.

The completed forms are to be sent to the following address:

McLaughlin Youth Center
2600 Providence Drive
Anchorage, Alaska 99508
ATTN: James Wann, Building Maintenance Specialist

Phone: (907) 261-4338 Fax (907) 261-4320

Please direct any questions or comments concerning the security section to Mr. Wann at the referenced phone number.

DEPARTMENT OF HEALTH & SOCIAL SERVICES
DIVISION OF JUVENILE JUSTICE

Youth Corrections Security Clearance Procedures

The following documents pertain to mandatory security background checks for anyone going to work inside a youth detention facility. This is a requirement and the paperwork must be processed prior to anyone going to work at the facility.

The completed forms are to be sent to the following address:

McLaughlin Youth Center
2600 Providence Drive
Anchorage, AK 99508
ATTN: Jim Wann, Building Maintenance Foreman

Phone: (907) 261-4338 / Fax: (907) 261-4308

Please direct any questions or comments concerning the security section to Mr. Wann at the referenced phone number.

Division of Juvenile Justice Background Check Release/Waiver

The Division of Juvenile Justice conducts background checks on potential employees and those changing job class or geographic post; community partners; volunteers; practicum students; and various contractors. These checks are to ensure that individuals having contact with our residents, data, and financial records are free from significant criminal conduct. The checks will involve an examination of your criminal history, child protection history, and your traffic records if driving is required. The presence of a history does not categorically preclude an individual from clearance. Please answer the following questions and sign and date the authorization at the bottom of the page.

Have you ever been found by a court or agency of this or another jurisdiction to have neglected, abused, or exploited a child or vulnerable adult? If "Yes" please describe:

☐ No ☐ Yes: _____

_____

Have you ever been charged with a 'sex offense' related crime or have you ever appeared on the centralized (sex offender) registry established under Centralized Registry (AS 47.05.330) or a similar registry of this state or another jurisdictions? If "Yes", please explain:

☐ No ☐ Yes : _____

_____

Is there anything in your background that could reflect negatively on the Division? If "Yes", please explain:

☐ No ☐ Yes: _____

_____

LAST NAME FIRST MIDDLE OTHER / PREVIOUS NAMES USED

SEX WEIGHT HEIGHT EYES HAIR DATE OF BIRTH PLACE OF BIRTH

SOCIAL SECURITY NO. RACE ALASKA DRIVER'S LIC. NO. (List Restrictions)

RESIDENCE ADDRESS MAILING ADDRESS TELEPHONE NUMBER

NOTIFY IN CASE OF EMERGENCY (NAME) ADDRESS TELEPHONE RELATIONSHIP

RESIDENT OF AK SINCE (MONTH/YEAR) STATES LIVED IN SINCE AGE 18

I, the undersigned, authorize DJJ Administration to investigate my criminal history, child protection history, and traffic records if driving is required. I understand that all background investigation materials obtained are confidential and will not be released without my express written consent:

SIGNATURE OF EMPLOYEE OR APPLICANT DATE POSITION APPLIED FOR

(REV. 2/14/13)

SECTION 01541
FACILITY KEYS

PART 1 GENERAL Not Used

PART 2 PRODUCTS Not Used

PART 3 EXECUTION Not Used

3.01 FACILITY KEY REQUEST

A. Submit written key request on CONTRACTOR company letterhead to the DEPARTMENT a minimum of 5 working days prior to the time key(s) will be needed.

1. Include the following information in the written key request:

a. List all sub-tier subcontractors between CONTRACTOR and the subcontractor needing access.

b. Name the person who will carry key on his/her person.

c. List all door numbers where their access is requested.

e. Signature of person authorized by Contractor Authorities form to request keys for this project.

3.02 KEY ISSUANCE

A. Keys shall be picked up by the CONTRACTOR authorized representative from the Engineer.

3.03 KEY CONTROL

A. The CONTRACTOR shall maintain a Key Control Log for all requests/issuances/returns of keys for the project.

3.04 KEY RETURNS

A. Return all keys directly to the Engineer.

3.05 LOST KEYS

A. Report all missing keys immediately to the Engineer.

3.06 LOST KEY FEES

A. The fee for changing each lock operated by the lost key shall be $50 per lock.

END OF SECTION

SECTION 01600
MATERIAL AND EQUIPMENT

PART 1 GENERAL

1.01 REQUIREMENTS INCLUDED

A. Products.

B. Transportation and Handling.

C. Storage and Protection.

D. Product Options.

E. Products List.

F. Substitutions.

1.02 RELATED REQUIREMENTS

A. Section 01005 - Administrative Provisions.

B. Section 01010 - Summary of Work.

C. Section 01090 - Reference Standards.

D. Section 01400 - Quality Control: Manufacturers' Certificates.

E. Section 01700 – Contract Closeout: Closeout Procedures, Operation and Maintenance Data, Warranties, Spare Parts and Maintenance Materials.

1.03 PRODUCTS

A. Products include material, equipment, and systems.

B. Comply with Specifications and referenced standards as minimum requirements.

C. Components required to be supplied in quantity within a Specification section shall be the same, and shall be interchangeable.

D. Do not use materials and equipment removed from existing structure, except as specifically required, or allowed, by Contract Documents.

1.04 TRANSPORTATION AND HANDLING

A. Transport products by methods to avoid product damage; deliver in undamaged condition in manufacturer's unopened containers or packaging, dry.

B. Provide equipment and personnel to handle products by methods to prevent soiling or damage.

C. Immediately on delivery, inspect shipment to assure:

1. Product complies with requirements of Contract Documents and reviewed submittals.

2. Quantities are correct.

3. Accessories and installation hardware are correct.

4. Containers and packages are intact and labels legible.

5. Products are protected and undamaged.

1.05 STORAGE AND PROTECTION

A. **HANDLE AND STORE MATERIALS FOR CONSTRUCTION, PRODUCTS OF DEMOLITION, AND OTHER ITEMS TO AVOID DAMAGE TO BUILDING.**

B. Store products in accordance with manufacturer's instructions, with seals and labels intact and legible. Store sensitive products in weather-tight enclosures; maintain within temperature and humidity ranges required by manufacturer's instructions.

C. Arrange storage to provide access for inspection. Periodically inspect to assure products are undamaged, and are maintained under required conditions.

D. Provide Material Safety Data Sheets (MSDS) for all products which may produce unpleasant or noxious odors. CONTRACTOR shall provide for adequate venting if needed.

1.06 OPTIONS

A. Products Specified by Reference Standards or by Description Only: Use any product meeting those standards.

B. Products Specified by Naming One or More Manufacturers with a Provision for Substitutions by meeting product description: Submit a request for substitution for any manufacturer not specifically named that meets the product description specifications.

C. Products Specified by Naming One or More Manufacturers followed by the term "No Substitutions": Use only specified manufacturers, no substitutions allowed.

1.07 PRODUCTS LIST

A. Within 7 days after date of Notice to Proceed, transmit four copies of a list of products, which are proposed for installation, including name of manufacturer.

B. Tabulate products by Specifications section number, title, and Article number

C. For products specified only by reference standards, give manufacturer, trade name, model or catalog designation, and reference standards.

D. DEPARTMENT will reply in writing within five days stating whether there is reasonable objection to listed items. Failure to object to a listed item shall not constitute a waiver of requirements of Contract Documents.

1.08 SUBSTITUTIONS

A. SUBSTITUTION SUBMITTAL PERIOD

1. Product substitution requests will be considered only within 7 days after date established in Notice to Proceed. Subsequent requests will be considered only in case of product unavailability or other conditions beyond control of CONTRACTOR. (Submit on Substitution Request Form "B")

B. LIMITATIONS ON SUBSTITUTIONS

1. **Only one request for substitution will be considered for each product** from each Prime Bidder/CONTRACTOR. When substitution is not accepted, Prime Bidder/CONTRACTOR shall provide specified product.

2. Substitutions will not be considered when indicated on Shop Drawings or product data submittals.

3. Substitute products shall not be ordered or installed without written acceptance.

4. DEPARTMENT will determine acceptability of substitutions.

C. REQUESTS FOR SUBSTITUTIONS

1. Submit separate request for each substitution. Document each request with complete data substantiating compliance of proposed substitution with

requirements of Contract Documents.

2. Identify product by Specification section and Article numbers. Provide manufacturer's name and address, trade name of product, and model or catalog number. List fabricators and Suppliers as appropriate.

3. Attach product data as specified in Section 01340.

4. List similar projects using product, dates of installation, and names of design Consultant(s) and owner.

5. Give itemized comparison of proposed substitution with specified product, listing variations, and reference to Specification sections and Article numbers.

6. Give quality and performance comparison between proposed substitution and the specified product.

7. Give cost data comparing proposed substitution with specified product, and amount of net change to Contract Price.

8. List availability of maintenance services and replacement materials.

9. State effect of substitution on construction schedule, and changes required in other Work or products.

D. CONTRACTOR REPRESENTATION

1. Request for substitution constitutes a representation that CONTRACTOR has investigated proposed product and has determined that it is equal to or superior in all respects to specified product.

2. CONTRACTOR will provide same warranty for substitution as for specified product.

3. CONTRACTOR will coordinate installation of accepted substitute, making such changes as may be required for Work to be complete in all respects.

4. CONTRACTOR certifies that cost data presented is complete and includes all related costs under this Contract.

5. CONTRACTOR waives claims for additional costs related to substitution which may later become apparent.

E. SUBMITTAL PROCEDURES

1. Submit five copies of complete request for Substitution Request Form. Request to include complete product information and data, color swatch board, and certification that proposed product meets or exceeds all requirements for the specified product.

2. DEPARTMENT will review CONTRACTOR's requests for substitutions within 5 days of receipt.

3. After receipt of submittal, DEPARTMENT will notify CONTRACTOR, in writing, of decision to accept or reject requested substitution within 5 days.

4. For accepted products, submit Shop Drawings, product data, and samples under provisions of Section 01300.

PART 2 PRODUCTS Not Used

PART 3 EXECUTION

Not Used

END OF SECTION

SECTION 01700
CONTRACT CLOSEOUT

PART 1 GENERAL

1.01 REQUIREMENTS INCLUDED

A. Closeout Procedures.

B. Final Cleaning.

C. Project Record Documents.

D. Operation and Maintenance Data.

E. Warranties.

F. Spare Parts and Maintenance Materials.

G. Maintenance Service.

1.02 RELATED REQUIREMENTS

A. Document 00700 - General Conditions: Fiscal provisions, legal submittals, and other administrative requirements.

B. Section 01010 - Summary of Work: Using Agency Occupancy.

C. Section 01400 – Quality Control: Departmental Inspection Services.

D. Section 01500 - Construction Facilities and Temporary Controls: Cleaning during construction.

1.03 CLOSEOUT PROCEDURES

A. Substantial Completion and Final Completion:

1. Substantial Completion:

a. Submit the following prior to requesting a Substantial Completion Inspection:

1. Evidence of Compliance with Requirements of Governing Authorities:

I. Certificate of Occupancy.

II. Required Certificates of Inspection.

2. Project Record Documents in accordance with sub section 1700-1.05

3. Operation and Maintenance Data in accordance with sub section 1700-1.06

4. Spare Parts and Maintenance Materials in accordance with sub section 1700-1.08

b. Substantial Completion shall be considered by the DEPARTMENT when:

1. Written notice is provided 7 days in advance of inspection date.

2. List of items to be completed or corrected is submitted.

3. Operation and Maintenance Manuals are submitted and approved by the DEPARTMENT.

4. Equipment and systems have been tested, adjusted, balanced and are fully operational.

5. Automated and manual controls are fully operational.

6. Operation of system has been demonstrated to DEPARTMENT

Personnel.

7. Certificate of Occupancy is submitted.
8. Certificates of Inspection for required inspections have been submitted.
9. Project Record Documents for the Work or the portion of the Work being accepted are submitted and approved.
10. Spare parts and maintenance materials are turned over to DEPARTMENT.
11. All keys are turned over to the DEPARTMENT.

c. Should the DEPARTMENT inspection find Work is not substantially complete, the Department will promptly notify CONTRACTOR in writing, listing observed deficiencies.

d. The CONTRACTOR shall remedy deficiencies and send a second written notice of Substantial Completion.

e. When the DEPARTMENT finds Work is substantially complete the DEPARTMENT will prepare a certificate of Substantial Completion in accordance with provisions of General Conditions

B. FINAL COMPLETION:

1. When CONTRACTOR considers Work is complete, submit written certification that:

   a. Contract Documents have been reviewed.

   b. Work has been inspected for compliance with Contract Documents.

   c. Work has been completed in accordance with Contract Documents, and deficiencies listed with certificate of Substantial Completion have been corrected.

   d. Work is complete and ready for final inspection.

2. Should the DEPARTMENT inspection find Work incomplete, DEPARTMENT will promptly notify CONTRACTOR in writing listing observed deficiencies.

3. CONTRACTOR shall remedy deficiencies and send a second certification of Final Completion.

4. When DEPARTMENT finds Work is complete, DEPARTMENT will consider closeout submittals.

C. REINSPECTION FEES

1. Should status of completion of Work require more than two re-inspections by the DEPARTMENT due to failure of Work to comply with CONTRACTOR's responsibility, the DEPARTMENT will deduct the cost of re-inspection from final payment to CONTRACTOR as provided in the Contract Documents.

2. Re-inspection fees shall not exceed $5,000 for any one re-inspection.

D. CLOSEOUT SUBMITTALS

1. Warranties and Bonds: Under provisions of Section 01700.

2. Evidence of Payment: In accordance with Conditions of the Contract.

3. Consent of Surety to Final Payment.

4. Certificates of Insurance for Products and Completed Operations: In accordance with Supplementary Conditions.

5. Certificate of Release.

E. APPLICATION FOR FINAL PAYMENT

1. Submit application for final payment in accordance with provisions of the General Conditions of the Contract.

F. Using Agency will occupy Concourse A for the purpose of conduct of business, under provision stated in certificate of Substantial Completion.

G. DEPARTMENT will issue a summary Change Order reflecting final adjustments to Contract Price not previously made by Change Order.

1.04 FINAL CLEANING

A. Execute final cleaning prior to Substantial Completion inspection.

B. Clean interior and exterior surfaces exposed to view; remove temporary labels, stains and foreign substances, polish transparent and glossy surfaces, vacuum carpeted and soft surfaces. Clean equipment and fixtures to a sanitary condition, clean or replace filters of mechanical equipment. Clean roofs, gutters, downspouts, and drainage systems.

C. Clean site; sweep paved areas, rake clean other surfaces.

D. Use materials which will not create hazards to health or property, and which will not damage surfaces. Follow manufacturers' recommendations.

E. Maintain cleaning until the DEPARTMENT issues certificate of substantial Completion.

F. Remove waste, debris, and surplus materials from the site. Clean grounds; remove stains, spills, and foreign substances from paved areas and sweep clean. Rake clean other exterior surfaces.

1.05 PROJECT RECORD DOCUMENTS

A. Maintain on site, one set of the following Record Documents; record actual revisions to the Work:

1. Drawings.
2. Specifications.
3. Addenda.
4. Change Orders and other modifications to the Contract.
5. Reviewed shop drawings, product data, and samples.
6. Manufacturers instructions for assembly, installation, and adjusting.

B. Ensure entries are complete and accurate, enabling future reference by DEPARTMENT.

C. Store Record Documents separate from documents used for construction.

D. Record information concurrent with construction progress.

E. SPECIFICATIONS: Legibly mark and record at each product section description of actual products installed, including the following:

1. Manufacturer's name and product model and number.
2. Product substitutions or alternates utilized.
3. Changes made by Addenda and Modifications.

F. Record Drawings and Shop Drawings: Legibly mark each item to record actual construction graphically to scale including:

1. Measured depths of foundations in relation to finish first floor datum.
2. Measured horizontal and vertical locations of underground utilities and appurtenances,

referenced to permanent surface improvements.

3. Measured locations of internal utilities and appurtenances concealed in construction, referenced to visible and accessible features of the Work.
4. Field changes of dimension and detail.
5. Details not on original Contract drawings.

1.06 OPERATION AND MAINTENANCE INSTRUCTIONS

A. Submit data bound in 8-1/2 by 11 inch (A4) text pages, 3-D side ring binders with durable plastic covers.

B. Prepare binder covers with printed title “OPERATION AND MAINTENANCE INSTRUCTIONS”, title of project, and subject matter of binder when multiple binders are requested.

C. Internally subdivide the binder contents with permanent page dividers, logically organized as described below; with the tab titling clearly printed under reinforced laminated plastic tabs.

D. Contents: Prepare a Table of Contents for each volume, with each product or system description identified, typed on 24 pound white paper, in 3 parts as follows:

1. Part 1: Directory, listing names, addresses, and telephone numbers of Architect/Engineer, CONTRACTOR, subcontractors, and major equipment suppliers.
2. Part 2: Operations and maintenance instructions, arranged by system and subdivided by Specification Section. For each category, identify names, addresses, and telephone numbers of subcontractors and suppliers. Identify the following:
   a. Significant design criteria.
   b. List of equipment.
   c. Parts list for each component.
   d. Operating instructions.
   e. Maintenance instructions for equipment and systems.
   f. Maintenance instructions for [special] finishes, including recommended cleaning methods and materials and special precautions identifying detrimental agents.
3. Part 3: Project Documents and Certificates, including the following:
   a. Shop drawings and product data.
   b. Certificates.
   c. Originals of warranties and bonds.

E. Submit one draft copy of completed volumes five working days prior to Substantial Completion inspection. This copy will be reviewed and returned, with DEPARTMENT comments. Revise content of all document sets as required prior to final submission.

F. Submit three sets of revised final volumes within ten days after Substantial Completion Inspection.

1.07 WARRANTIES

A. As a condition precedent to Final Payment, all guaranties and warranties as specified under various sections of the Contract Documents shall be obtained by the CONTRACTOR and delivered to the OWNER, in duplicate giving a summary of guarantees attached and stating the following in respect to each:

1. Character of Work affected.
2. Name of Subcontractors.
3. Period of Guarantee.
4. Conditions of Guarantee.

B. Delivery of said guarantees and/or warrantees shall not relieve the CONTRACTOR from any obligations assumed under any other provision of the Contract.

C. If, within any guarantee period, repairs or changes are required in connection with the guaranteed Work, which in the opinion of the OWNER is rendered necessary as the result of the use of materials, equipment or workmanship, which are defective, or inferior, or not in accordance with the terms of the Contract, the CONTRACTOR shall, upon receipt of notice from the OWNER, and without expense to the OWNER, proceed within seven (7) calendar days to:

1. Place in satisfactory conditions in every particular all of such guaranteed Work, correct all defects therein, and make good all damages to the structure or site.
2. Make good all Work or materials, or the equipment and contents of structures or site disturbed in fulfilling any such guarantee.

D. If the CONTRACTOR, after notice, fails to comply without the terms of the guarantee, the OWNER may have the defects corrected and the CONTRACTOR and CONTRACTOR's Surety shall be liable for all expenses incurred in connection therewith, including Engineer's fees.

1.08 SPARE PARTS AND MAINTENANCE MATERIALS

A. Provide products, spare parts, maintenance and extra materials in quantities specified in individual Specification Sections.

B. Deliver to project site and place in location as directed, obtain receipt prior to final payment.

PART 2 PRODUCTS Not Used

PART 3 EXECUTION Not Used

END OF SECTION

PART 1 - GENERAL

1.1 SUMMARY

A. Section Includes:

1. Non-detention standard non-rated, insulated hollow metal doors and frames.

B. Codes and References: Comply with the version year adopted by the Authority Having Jurisdiction.

1. ANSI/SDI A250.8 - Recommended Specifications for Standard Steel Doors and Frames.
2. ANSI/SDI A250.4 - Test Procedure and Acceptance Criteria for Physical Endurance for Steel Doors, Frames, Frames Anchors and Hardware Reinforcing.

1.2 SUBMITTALS

A. Product Data: For each type of product indicated. Include construction details, material descriptions, core descriptions, hardware reinforcements, profiles, anchors, fire-resistance rating, and finishes.

B. Door hardware supplier is to furnish templates, template reference number and/or physical hardware to the steel door and frame supplier in order to prepare the doors and frames to receive the finish hardware items.

1.3 QUALITY ASSURANCE

A. Source Limitations: Obtain hollow metal doors and frames through one source from a single manufacturer wherever possible.

1.4 DELIVERY, STORAGE, AND HANDLING

A. Deliver hollow metal work palletized, wrapped, or crated to provide protection during transit and Project site storage. Do not use non-vented plastic.

B. Deliver welded frames with two removable spreader bars across bottom of frames, tack welded to jambs and mullions.

C. Store hollow metal work under cover at Project site. Place in stacks of five units maximum in a vertical position with heads up, spaced by blocking, on minimum 4-inch high wood blocking. Do not store in a manner that traps excess humidity.

1. Provide minimum 1/4-inch space between each stacked door to permit air circulation. Door and frames to be stacked in a vertical upright position.

1.5 PROJECT CONDITIONS

A. Field Measurements: Verify actual dimensions of openings by field measurements before fabrication.

1.6 COORDINATION

A. Coordinate installation of anchorages for hollow metal frames. Furnish setting drawings, templates, and directions for installing anchorages, including sleeves, concrete inserts, anchor bolts, and items with integral anchors. Deliver such items to Project site in time for installation.

1.7 WARRANTY

A. Special Warranty: Manufacturer's standard form in which manufacturer agrees to repair or replace doors that fail in materials or workmanship within specified warranty period.

B. Warranty includes installation and finishing that may be required due to repair or replacement of defective doors.

PART 2 - PRODUCTS

2.1 MANUFACTURERS

A. Manufacturers: Subject to compliance with requirements, provide products by one of the following:

1. CECO Door Products.
2. Curries Company.
3. Steelcraft.
4. Or approved equal.

2.2 MATERIALS

A. Metallic-Coated Steel Sheet: ASTM A 653/A 653M, Commercial Steel (CS), Type B; with minimum G60 (Z180) or A60 (ZF180) metallic coating.

B. Frame Anchors: ASTM A 653/A 653M, Commercial Steel (CS), Commercial Steel (CS), Type B; with minimum G60 (Z180) or A60 (ZF180) metallic coating.

2.3 ENERGY EFFICIENCY HOLLOW METAL DOORS

A. General: At exterior and vestibule openings, provide 1-3/4 inch doors of design specified, not less than thickness indicated; fabricated with smooth surfaces, without visible joints or seams on exposed faces unless otherwise indicated. Comply with ANSI/SDI A250.8 and ANSI/NAAMM HMMA 867.

B. Energy Efficient Exterior Doors: Face sheets fabricated of commercial quality hot-dipped zinc coated steel that complies with ASTM A924 A60. Provide doors complying with requirements

indicated below by referencing ANSI/SDI A250.8 for level and model, ANSI/SDI A250.4 for physical performance level, and HMMA 867 for door construction.

1. Design: Flush panel.
2. Core Construction: Foamed in place polyurethane and steel stiffened laminated core with no stiffener face welds, in compliance with HMMA 867 “Laminated Core”.

    a. Provide 22 gauge steel stiffeners at 6 inches on-center internally welded at 5" on-center to integral core assembly, foamed in place polyurethane core chemically bonded to all interior surfaces. No stiffener face welding is permitted.
    b. Thermal properties to rate at a fully operable minimum U-Factor 0.29 and R-Value 3.4, including insulated door, thermal-break frame and threshold.

        1) Kerf Type Frames: Thermal properties to rate at a fully operable minimum U-Factor 0.36 and R-Value 2.7, including insulated door, kerf type frame, and threshold.

3. Level/Model: Level 3 and Physical Performance Level A (Extra Heavy Duty), Minimum 16 gauge (0.042 inch - 1.1-mm) thick steel, Model 2.
4. Vertical Edges: Vertical edges to be mechanically interlocked with hairline seam. Beveled Lock Edge, 1/8 inch in 2 inches (3 mm in 50 mm).
5. Top and Bottom Edges: Reinforce tops and bottoms of doors with a continuous steel channel not less than 16 gauge, extending the full width of the door and welded to the face sheet. Doors with an inverted top channel to include a steel closure channel, screw attached, with the web of the channel flush with the face sheets of the door. Plastic or composite channel fillers are not acceptable.
6. Hinge Reinforcement: Minimum 7 gauge (3/16") plate 1-1/4" x 9".
7. Hardware Reinforcements: Fabricate according to ANSI/SDI A250.6 with reinforcing plates from same material as door face sheets.

2.4 ENERGY EFFICIENCY HOLLOW METAL FRAMES

A. Thermal Break Frames: At exterior openings, provide thermally broken frame profiles available for use in both masonry and drywall construction. Fabricate from minimum 16 gauge galvannealed steel, with positive 3/8" vinyl thermal break and integral vinyl weatherstripping.

B. Exterior Frames: Fabricated of hot-dipped zinc coated steel that complies with ASTM A 653/A 653M, Coating Designation A60.

1. Fabricate frames with mitered or coped corners.
2. Fabricate frames, with the exception of knock down types, with "closed and tight" miter seams continuously welded on face, finished smooth with no visible seam unless otherwise indicated.

2.5 FRAME ANCHORS

A. Jamb Anchors: Concrete Wall Type: Designed to attach to concrete walls.

2.6 FABRICATION

A. Fabricate hollow metal work to be rigid and free of defects, warp, or buckle. Accurately form metal to required sizes and profiles, with minimum radius for thickness of metal. Where practical, fit and assemble units in manufacturer's plant.

B. Tolerances: Fabricate hollow metal work to tolerances indicated in ANSI/SDI A250.8.

C. Hollow Metal Doors:

1. Exterior Doors: Provide optional weep-hole openings in bottom of exterior doors to permit moisture to escape where specified.

D. Hollow Metal Frames:

1. Weld flush face joints continuously; grind, fill, dress, and make smooth, flush, and invisible.

a. Welded frames are to be provided with two steel spreaders temporarily attached to the bottom of both jambs to serve as a brace during shipping and handling. Spreader bars are for bracing only and are not to be used to size the frame opening.

2. Provide countersunk, flat- or oval-head exposed screws and bolts for exposed fasteners unless otherwise indicated for removable stops, provide security screws at exterior locations.

3. Jamb Anchors: Provide number and spacing of anchors as follows:

a. Concrete Wall Type: Locate anchors not more than 12 inches from top and bottom of frame. Space anchors not more than 32 inches o.c. and as follows:

1) Three anchors per jamb up to 60 inches high.
2) Four anchors per jamb from 60 to 90 inches high.
3) Two anchors per head for frames above 42 inches wide.

E. Hardware Preparation: Factory prepare hollow metal work to receive template mortised hardware; include cutouts, reinforcement, mortising, drilling, and tapping according to the Door Hardware Schedule and templates furnished.

1. Locate hardware as indicated, or if not indicated, according to ANSI/SDI A250.8.
2. Reinforce doors and frames to receive non-template, mortised and surface mounted door hardware.
3. Comply with applicable requirements in ANSI/SDI A250.6 and ANSI/DHI A115 Series specifications for preparation of hollow metal work for hardware.

2.7 STEEL FINISHES

A. Prime Finishes: Doors and frames to be cleaned, and chemically treated to insure maximum finish paint adhesion. Surfaces of the door and frame exposed to view to receive a factory applied coat of rust inhibiting shop primer.

1. Shop Primer: Manufacturer's standard, fast-curing, lead and chromate free primer complying with ANSI/SDI A250.10 acceptance criteria; recommended by primer manufacturer for substrate; and compatible with substrate and field-applied coatings.

2. Final paint finish shall be two coats of Alkyd based exterior enamel. Color to be selected by Department.

PART 3 - EXECUTION

3.1 EXAMINATION

A. Examine substrates, areas, and conditions, with Installer present, for compliance with requirements for installation tolerances and other conditions affecting performance of the Work.

B. General Contractor to verify the accuracy of dimensions given to the steel door and frame manufacturer for existing openings or existing frames (strike height, hinge spacing, hinge back set, etc.).

C. Proceed with installation only after unsatisfactory conditions have been corrected.

3.2 PREPARATION

A. Remove welded in shipping spreaders installed at factory. Restore exposed finish by grinding, filling, and dressing, as required to make repaired area smooth, flush, and invisible on exposed faces.

B. Prior to installation, adjust and securely brace welded hollow metal frames for squareness, alignment, twist, and plumbness.

C. Tolerances shall comply with SDI-117 "Manufacturing Tolerances Standard Steel Doors and Frames."

D. Drill and tap doors and frames to receive non-template, mortised, and surface-mounted door hardware.

3.3 INSTALLATION

A. General: Install hollow metal work plumb, rigid, properly aligned, and securely fastened in place; comply with Drawings and manufacturer's written instructions.

B. Hollow Metal Frames: Install hollow metal frames of size and profile indicated. Comply with ANSI/SDI A250.11 and NFPA 80 at fire rated openings.

1. Set frames accurately in position, plumbed, aligned, and braced securely until permanent anchors are set. After wall construction is complete and frames properly set and secured, remove temporary braces, leaving surfaces smooth and undamaged. Shim as necessary to comply with installation tolerances.

2. Field foam all voids between frames and concrete walls.

C. Hollow Metal Doors: Fit hollow metal doors accurately in frames, within clearances specified below. Shim as necessary.

a. Jambs and Head: 1/8 inch plus or minus 1/16 inch.
b. Between Edges of Pairs of Doors: 1/8 inch plus or minus 1/16 inch.
c. Between Bottom of Door and Top of Threshold: Maximum 3/8 inch.
d. Between Bottom of Door and Top of Finish Floor (No Threshold): Maximum 3/4 inch.

3.4 ADJUSTING AND CLEANING

A. Final Adjustments: Check and readjust operating hardware items immediately before final inspection. Leave work in complete and proper operating condition. Remove and replace defective work, including hollow metal work that is warped, bowed, or otherwise unacceptable.

B. Remove grout and other bonding material from hollow metal work immediately after installation.

C. Prime-Coat and Painted Finish Touchup: Immediately after erection, sand smooth rusted or damaged areas of prime coat, or painted finishes, and apply touchup of compatible air drying, rust-inhibitive primer, zinc rich primer (exterior and galvanized openings) or finish paint.

3.5 Door Hardware:

A. Door 100

Item	Model	Finish	MFR
Hinge	T4A3786 NRP	US26D	McKinney
Lock (Storeroom)	8204 LNL	US32D	Sargent
Mortise Cylinder	To Be Determined		
Threshold	2525x266AT	Pemkote	Pemko
Gasketing	S44D (HEAD & JAMBS)		Pemko

END OF SECTION

PART 1 - GENERAL

1.1 SUMMARY

A. Section Includes:

1. Cellar access doors.

1.2 ACTION SUBMITTALS

A. Product Data: For each type of product.

PART 2 - PRODUCTS

2.1 ACCESS DOORS FOR CELLARS

A. Basis-of-Design Product: Subject to compliance with requirements, provide product indicated or comparable product by one of the following:

1. BILCO Areaway Door, Model SLW

2. Other manufactures meeting the requirements of this specification may be submitted for approval.
3.

B. Assembly Description: Fabricate door to fit flush to frame. Provide manufacturer's standard-width exposed flange, proportional to door size.
1. Locations: Exterior Cellar Access.
2. Door Size: 48” wide x 75” long.
3. Uncoated Steel Sheet for Door: Nominal 0.10 inch , 12 gage.

a. Finish: Factory prime. Final finish shall be two coats of Alkyd based exterior enamel finish. Coordinate compatibility with factory applied primer. Color to be selected by Department.

4. Frame Material: Same material, thickness, and finish as door.
5. Hinges: Manufacturer's standard with torsion spring assist.
6. Hardware: Latch.

2.2 FABRICATION

A. General: Provide cellar access door and frame assemblies manufactured as integral units ready for installation.

B. Metal Surfaces: For metal surfaces exposed to view in the completed Work, provide materials with smooth, flat surfaces without blemishes. Do not use materials with exposed pitting, seam marks, roller marks, rolled trade names, or roughness.

C. Doors and Frames: Grind exposed welds smooth and flush with adjacent surfaces. Furnish attachment devices and fasteners of type required to secure access doors to types of supports indicated.

2.3 FINISHES

A. Comply with NAAMM's "Metal Finishes Manual for Architectural and Metal Products" for recommendations for applying and designating finishes.

B. Protect mechanical finishes on exposed surfaces from damage by applying a strippable, temporary protective covering before shipping.

C. Appearance of Finished Work: Noticeable variations in same piece are not acceptable. Variations in appearance of adjoining components are acceptable if they are within the range of approved Samples and are assembled or installed to minimize contrast.

D. Steel Finishes:

1. Factory Prime: Apply manufacturer's standard, fast-curing, lead- and chromate-free, universal primer immediately after surface preparation and pretreatment.

PART 3 - EXECUTION

3.1 INSTALLATION

A. Comply with manufacturer's written instructions for installing doors and frames.

B. Doors and frames shall be watertight after installation.

3.2 ADJUSTING

A. Adjust doors and hardware, after installation, for proper operation.

B. Remove and replace doors and frames that are warped, bowed, or otherwise damaged.

END OF SECTION

PART 1 - GENERAL

1.1 SUMMARY

A. Section Includes:

1. Non-load-bearing steel framing systems for interior gypsum board assemblies.

1.2 ACTION SUBMITTALS

A. Product Data: For each type of product.

PART 2 - PRODUCTS

2.1 FRAMING SYSTEMS

A. Framing Members, General: Comply with ASTM C 754 for conditions indicated.

1. Steel Sheet Components: Comply with ASTM C 645 requirements for metal unless otherwise indicated.
2. Protective Coating: ASTM A 653/A 653M, G40 (Z120), hot-dip galvanized unless otherwise indicated.

B. Studs and Runners: ASTM C 645. Use either steel studs and runners or dimpled steel studs and runners.

1. Steel Studs and Runners:

a. Minimum Base-Metal Thickness: 0.033 inch (0.84 mm), 20 gauge.
b. Depth: As indicated on Drawings.

2. Dimpled Steel Studs and Runners:

a. Minimum Base-Metal Thickness: 0.025 inch (0.64 mm), 22 gauge.
b. Depth: As indicated on Drawings.

C. Flat Strap and Backing Plate: Steel sheet for blocking and bracing in length and width indicated.

1. Minimum Base-Metal Thickness: 0.033 inch (0.84 mm), 20 gauge.

D. Hat-Shaped, Rigid Furring Channels: ASTM C 645.

1. Minimum Base-Metal Thickness: 0.033 inch (0.84 mm).
2. Depth: 7/8 inch (22.2 mm).

2.2 AUXILIARY MATERIALS

A. General: Provide auxiliary materials that comply with referenced installation standards.

1. Fasteners for Metal Framing: Of type, material, size, corrosion resistance, holding power, and other properties required to fasten steel members to substrates.

PART 3 - EXECUTION

3.1 EXAMINATION

A. Examine areas and substrates, with Installer present, and including welded hollow-metal frames, cast-in anchors, and structural framing, for compliance with requirements and other conditions affecting performance of the Work.

B. Proceed with installation only after unsatisfactory conditions have been corrected.

3.2 PREPARATION

A. Suspended Assemblies: Coordinate installation of suspension systems with installation of overhead structure to ensure that inserts and other provisions for anchorages to building structure have been installed to receive hangers at spacing required to support the Work and that hangers will develop their full strength.

1. Furnish concrete inserts and other devices indicated to other trades for installation in advance of time needed for coordination and construction.

3.3 INSTALLATION, GENERAL

A. Installation Standard: ASTM C 754.
1. Gypsum Board Assemblies: Also comply with requirements in ASTM C 840 that apply to framing installation.

B. Install supplementary framing, and blocking to support fixtures, equipment services, heavy trim, grab bars, toilet accessories, furnishings, door stops, or similar construction.

C. Install bracing at terminations in assemblies.

D. Do not bridge building control and expansion joints with non-load-bearing steel framing members. Frame both sides of joints independently.

3.4 INSTALLING FRAMED ASSEMBLIES

A. Install framing system components according to spacings indicated, but not greater than spacings required by referenced installation standards for assembly types.

1. Single-Layer Application: 16 inches (406 mm) o.c. unless otherwise indicated.

B. Where studs are installed directly against exterior masonry walls or dissimilar metals at exterior walls, install isolation strip between studs and exterior wall.

C. Install tracks (runners) at floors and overhead supports. Extend framing full height to structural supports or substrates above suspended ceilings except where partitions are indicated to terminate at suspended ceilings. Continue framing around ducts penetrating partitions above ceiling.

D. Installation Tolerance: Install each framing member so fastening surfaces vary not more than 1/8 inch (3 mm) from the plane formed by faces of adjacent framing.

END OF SECTION

This page intentionally left blank.

PART 1 - GENERAL

1.1 SUMMARY

A. Section Includes:

1. Interior gypsum board used for incidental duct enclosures required as part of the duct routing system.

B. Related Requirements:

1. Section 09200 "Non-Structural Metal Framing" for non-structural framing and suspension systems that support gypsum board panels.

1.2 ACTION SUBMITTALS

A. Product Data: For each type of product.

B. Samples: For the following products:

1. Trim Accessories: Full-size Sample in 12-inch- (300-mm-) long length for each trim accessory indicated.

1.3 DELIVERY, STORAGE AND HANDLING

A. Store materials inside under cover and keep them dry and protected against weather, condensation, direct sunlight, construction traffic, and other potential causes of damage. Stack panels flat and supported on risers on a flat platform to prevent sagging.

1.4 FIELD CONDITIONS

A. Environmental Limitations: Comply with ASTM C 840 requirements or gypsum board manufacturer's written recommendations, whichever are more stringent.

B. Do not install paper-faced gypsum panels until installation areas are enclosed and conditioned.

C. Do not install panels that are wet, those that are moisture damaged, and those that are mold damaged.

1. Indications that panels are wet or moisture damaged include, but are not limited to, discoloration, sagging, or irregular shape.

2. Indications that panels are mold damaged include, but are not limited to, fuzzy or splotchy surface contamination and discoloration.

PART 2 - PRODUCTS

2.1 GYPSUM BOARD, GENERAL

A. Size: Provide maximum lengths and widths available that will minimize joints in each area and that correspond with support system indicated.

2.2 INTERIOR GYPSUM BOARD

A. Manufacturers: Subject to compliance with requirements, available manufacturers offering products that may be incorporated into the Work include, but are not limited to, the following:

1. American Gypsum.
2. CertainTeed Corp.
3. Georgia-Pacific Gypsum LLC.
4. National Gypsum Company.
5. USG Corporation.

B. Gypsum Board, Type X: ASTM C 1396/C 1396M.

1. Thickness: 5/8 inch (15.9 mm).
2. Long Edges: Tapered.

2.3 TRIM ACCESSORIES

A. Interior Trim: ASTM C 1047.

1. Material: Galvanized or aluminum-coated steel sheet or rolled zinc.
2. Shapes:

a. Cornerbead.
b. LC-Bead: J-shaped; exposed long flange receives joint compound.
c. L-Bead: L-shaped; exposed long flange receives joint compound.
d. Expansion (control) joint.

2.4 JOINT TREATMENT MATERIALS

A. General: Comply with ASTM C 475/C 475M.

B. Joint Tape:

1. Interior Gypsum Board: Paper.

C. Joint Compound for Interior Gypsum Board: For each coat use formulation that is compatible with other compounds applied on previous or for successive coats.

1. Prefilling: At open joints and damaged surface areas, use setting-type taping compound.
2. Embedding and First Coat: For embedding tape and first coat on joints, fasteners, and trim flanges, use setting-type taping compound.

   a. Use setting-type compound for installing paper-faced metal trim accessories.

3. Fill Coat: For second coat, use drying-type, all-purpose compound.
4. Finish Coat: For third coat, use drying-type, all-purpose compound.

2.5 AUXILIARY MATERIALS

A. General: Provide auxiliary materials that comply with referenced installation standards and manufacturer's written recommendations.

B. Steel Drill Screws: ASTM C 1002, unless otherwise indicated.

1. Use screws complying with ASTM C 954 for fastening panels to steel members from 0.033 to 0.112 inch (0.84 to 2.84 mm) thick.
2. For fastening cementitious backer units, use screws of type and size recommended by panel manufacturer.

C. Acoustical Joint Sealant: Manufacturer's standard nonsag, paintable, nonstaining latex sealant complying with ASTM C 834. Product effectively reduces airborne sound transmission through perimeter joints and openings in building construction as demonstrated by testing representative assemblies according to ASTM E 90.

1. Products: Subject to compliance with requirements, available products that may be incorporated into the Work include, but are not limited to, the following:

   a. Grabber Construction Products; Acoustical Sealant GSC.
   b. Pecora Corporation; AC-20 FTR.
   c. Specified Technologies, Inc.; Smoke N Sound Acoustical Sealant.
   d. USG Corporation; SHEETROCK Acoustical Sealant.
   e. Tremco; Acoustical Sealant

PART 3 - EXECUTION

3.1 EXAMINATION

A. Examine areas and substrates including welded hollow-metal frames and framing, with Installer present, for compliance with requirements and other conditions affecting performance.

B. Examine panels before installation. Reject panels that are wet, moisture damaged, and mold damaged.

C. Proceed with installation only after unsatisfactory conditions have been corrected.

3.2 APPLYING AND FINISHING PANELS, GENERAL

A. Comply with ASTM C 840.

B. Install panels with face side out. Butt panels together for a light contact at edges and ends with not more than 1/16 inch (1.5 mm) of open space between panels. Do not force into place.

C. Locate edge and end joints over supports. Do not place tapered edges against cut edges or ends. Stagger vertical joints on opposite sides of partitions. Do not make joints other than control joints at corners of framed openings.

D. Form control and expansion joints with space between edges of adjoining gypsum panels.

E. Cover both faces of support framing with gypsum panels in concealed spaces (above ceilings, etc.), except in chases braced internally.

1. Unless concealed application is indicated or required for sound, fire, air, or smoke ratings, coverage may be accomplished with scraps of not less than 8 sq. ft. (0.7 sq. m) in area.
2. Fit gypsum panels around ducts, pipes, and conduits.
3. Where partitions intersect structural members projecting below underside of floor/roof slabs and decks, cut gypsum panels to fit profile formed by structural members; allow 1/4- to 3/8-inch- (6.4- to 9.5-mm-) wide joints to install sealant.

F. Isolate perimeter of gypsum board applied to non-load-bearing partitions at structural abutments, except floors. Provide 1/4- to 1/2-inch- (6.4- to 12.7-mm-) wide spaces at these locations and trim edges with edge trim where edges of panels are exposed. Seal joints between edges and abutting structural surfaces with acoustical sealant.

G. Attachment to Steel Framing: Attach panels so leading edge or end of each panel is attached to open (unsupported) edges of stud flanges first.

3.3 APPLYING INTERIOR GYPSUM BOARD

A. Install interior gypsum board in the following locations:

1. Wallboard Type: Type X, unless otherwise indicated.

B. Single-Layer Application:

1. On partitions/walls, apply gypsum panels vertically (parallel to framing) unless otherwise indicated or required by fire-resistance-rated assembly, and minimize end joints.

   a. Stagger abutting end joints not less than one framing member in alternate courses of panels.
   b. At stairwells and other high walls, install panels horizontally unless otherwise indicated or required by fire-resistance-rated assembly.

2. On Z-furring members, apply gypsum panels vertically (parallel to framing) with no end joints. Locate edge joints over furring members.
3. Fastening Methods: Apply gypsum panels to supports with steel drill screws.

3.4 INSTALLING TRIM ACCESSORIES

A. General: For trim with back flanges intended for fasteners, attach to framing with same fasteners used for panels. Otherwise, attach trim according to manufacturer's written instructions.

B. Interior Trim: Install in the following locations:

1. Cornerbead: Use at outside corners unless otherwise indicated.
2. LC-Bead: Use at exposed panel edges.
3. L-Bead: Use where indicated.

3.5 FINISHING GYPSUM BOARD

A. General: Treat gypsum board joints, interior angles, edge trim, control joints, penetrations, fastener heads, surface defects, and elsewhere as required to prepare gypsum board surfaces for decoration. Promptly remove residual joint compound from adjacent surfaces.

B. Prefill open joints and damaged surface areas.

C. Spray textured finish is NOT specified on this project.

D. Apply joint tape over gypsum board joints, except for trim products specifically indicated as not intended to receive tape.

E. Gypsum Board Finish Levels: Finish panels to levels indicated below and according to ASTM C 840:
   1. Level 4: At panel surfaces that will be exposed to view unless otherwise indicated.

      a. All new gypsum board will require latex based primer and two coats of latex wall paint. Coordinate with Department to select type and color used in existing facility.

3.6 PROTECTION

A. Protect adjacent surfaces from drywall compound and promptly remove from floors and other non-drywall surfaces. Repair surfaces stained, marred, or otherwise damaged during drywall application.

B. Protect installed products from damage from weather, condensation, direct sunlight, construction, and other causes during remainder of the construction period.

C. Remove and replace panels that are wet, moisture damaged, and mold damaged.

   1. Indications that panels are wet or moisture damaged include, but are not limited to, discoloration, sagging, or irregular shape.
   2. Indications that panels are mold damaged include, but are not limited to, fuzzy or splotchy surface contamination and discoloration.

END OF SECTION

PART 1 GENERAL

1.1 SECTION INCLUDES

A. Basic Mechanical Requirements specifically applicable to Division 15 and Division 13 Sections as delineated in these specifications, in addition to Division 01 – General Requirements.

1.2 SCOPE

A. Furnish all labor, materials, equipment, supervision of labor and performance of all operations required to completely install satisfactorily operating mechanical and plumbing systems as defined herein and on Drawings.

B. Major items of work include, but are not limited to, the installation of the following systems:
   1. Heating, ventilation & air conditioning systems.
   2. Controls systems.

C. Other Divisions of these Specifications apply to work generally defined by Division 15 Specifications and/or shown on Mechanical Drawings. For additional details, refer to Drawings detailing work under other Divisions. All work shown on the "M" series Drawings, and 15000 series Specifications is to be provided unless otherwise stated.

D. The drawings and specifications are complementary to each other. What is shown on one is as binding as if called for in both. The mechanical drawings are generally diagrammatic and are intended to show mechanical details in a schematic fashion. Do not scale mechanical drawings. Exact locations are not shown unless so indicated or specifically dimensioned. Typical connection diagrams are schematic and do not show the actual physical arrangement of equipment. The plans do not necessarily show complete details of all the features that may affect the mechanical installations; however, it is the intent of the contract documents to provide a complete and satisfactorily working installation.

E. Submit in writing to the Owner’s Representative for review details of any necessary or proposed departures from these Contract Documents and reasons therefore, as soon as practicable within 30 days after the award of the contract. Make no such departure without prior written approval of the Owner’s Representative.

F. Coordination of the Work: Coordinate work under this Division with work of other trades to avoid conflicts, errors, and delays.

G. Verify the approximate location of equipment and other mechanical system components shown on the Drawings and report any conflicts with openings, structural members, and components of other systems and equipment having fixed locations.

H. During the course of accomplishing the work defined herein and on the Contract Drawings, the Contractor discovers major damage, defect or deterioration to existing equipment or systems indicated as existing to remain, and where such damage, defect or deterioration will or might effect the safe and proper operation of such equipment and systems, the Contractor shall immediately notify the Owner's Representative in writing.

1.3 REFERENCES

A. Codes and Standards: All work and materials shall comply with the latest issues of the following:
1. American Gas Association (AGA).
2. Air Moving and Conditioning Association (AMCA).
3. American National Standards Institute (ANSI).
4. Air-Conditioning and Refrigeration Institute (ARI).
5. American Society of Heating, Refrigeration, and Air Conditioning Engineers (ASHRAE).
6. American Society of Mechanical Engineers (ASME).
7. American Society for Testing Materials (ASTM).
8. American Water Works Association (AWWA).
9. American Welding Society (AWS).
10. Environmental Protection Agency (EPA).
11. Hydraulic Institute (HI).
12. International Building Code (IBC).
13. International Fire Code (IFC).
14. International Fuel Gas Code (IFGC)
15. International Mechanical Code (IMC).
16. National Bureau of Standards (NBS).
17. National Environmental Balancing Bureau (NEBB).
18. National Electrical Code (NEC).
19. National Electrical Manufacturers Association (NEMA).
20. National Fire Protection Association (NFPA).
21. Occupational Safety and Health Administration (OSHA).
22. Sheet Metal and Air Conditioning Contractors' National Association (SMACNA).
23. Underwriters Laboratories, Inc. (UL).
24. Uniform Plumbing Code (UPC).
25. All base materials shall comply with standards of ASTM and ANSI.

1.4 QUALITY ASSURANCE

A. All work and materials shall be in accordance with applicable codes, standards and ordinances, rules and regulations of the Fire Marshal and of the utility companies. Nothing in the Drawings and Specifications shall be construed as requiring or permitting work in violation of such codes.

B. Rulings and interpretations of the agencies having jurisdiction shall be considered as part of the codes and regulations if commonly known to the trade prior to bidding.

C. Whenever the Drawings and Specifications require higher standards than the codes and regulations, the Drawings and Specifications shall govern.

D. Only craftsmen skilled in their trade shall be employed.

1.5 QUALIFICATIONS

A. Installers: Company specializing in performing Work of this section with a minimum three years of documented experience.

1.6 SUBMITTALS

A. Submit shop drawings, product data, material data sheets, manufacturers' literature, and all other items as specified in Division 01 and the individual sections of Division 15000. Incomplete Division 15000 submittals will be returned without review.

B. Shop Drawings and Manufacturer's Literature:
1. Submit large scale dimensioned shop drawings certified by manufacturer of major equipment and other equipment as may be directed by the Owner's Representative.
2. Submit shop drawings for all work, indicating solutions to space problems and coordination with work in other Divisions. These drawings, as a requirement of the Division, must indicate work of all Divisions involved in congested areas, including ductwork, piping, electrical work, etc.
3. Furnish physical and performance data, including materials, manufacturers' names, model numbers, sizes, capacities, finishes, colors, accessories and other data required to completely describe equipment and to indicate compliance with Drawings and Specifications.
4. Submit shop drawings of all equipment bases and supports, and all pipe and duct hangers and supports.

C. Submit shop drawings and other items as specified in the individual Sections.

D. Include with shop drawings of fabricated items the basis of design and design calculations.

1.7 CLOSEOUT SUBMITTALS

A. Submit all required certifications and testing reports as specified in Division 01 and as follows:
1. Upon completion of instruction, submit a certification that instruction in the maintenance and operation of all mechanical systems and equipment, as specified herein, has been provided to designated personnel.
2. The certification shall:
a. list systems and equipment which were the subject of instruction,
b. list the names personnel instructed the dates of instruction,
c. list the names of the personnel providing instruction,
d. list the appropriate areas of instruction,
e. list the dates of classroom and on-site instructional session, and be signed by all individuals participating in the instruction (both instructor and instructed).

B. Operating and Maintenance Data:
   1. Provide six (6) sets of each type of instruction bound together in D-ring metal-ringed hardcover binders with removable pages, with a typewritten index indicating location of items in the work. Any information not pertinent to this work shall be deleted or neatly and completely lined out. Binders shall be of capacity to allow a minimum of 20 percent expansion.
   2. The following components of the mechanical portion of the maintenance manual shall be printed so as not to fade, be permanently framed, glass or plexiglass covered and mounted in a convenient location in the respective mechanical room where the equipment and/or systems are located:
      a. Valve directory.
      b. Equipment nameplate directory.
      c. System schematic drawings.
   3. Operating and maintenance data must be provided for Owner's Representative approval at least thirty (30) days prior to Substantial Completion. If approved operation and maintenance instructions are not on hand at the time of Substantial Completion and/or occupancy, the Contractor, at his own expense, shall make all repairs, replacements and installation of any components that may be destroyed or damaged due to the absence of specified instructions, and shall hold the Owner harmless.

C. Submit mechanical HVAC system start-up, testing, and demonstration plans.

D. Submit DDC controls system start-up and demonstration plans.

E. Submit a mechanical system operating instruction training schedule complete with class outline lesson plan that includes training topics and durations.

F. Project Record Documents: Record actual locations of components and tag numbering.

1.8 PROJECT CONDITIONS

A. Site Visit: It is advised that the Contractor visit the site and verify the exact conditions relating to his work and obtain such information as may be necessary to provide an intelligent and conclusive bid. No allowance will be made on behalf of the Contractor for any extra expense due to failure on his part to make such a visit.

B. Protection: Protect surrounding areas and surfaces to preclude damage due to the installation of any material or equipment. Unfinished work shall be temporarily protected from unsafe conditions and damage.

C. Sequencing and Scheduling: Coordinate the scheduling of equipment and material installations with all other affected trades to avoid conflicts. If, during the course of construction, conditions are discovered which adversely affect the mechanical work, immediately notify the Owner's Representative before proceeding. Advise other trades of openings required in their work for the subsequent installation of mechanical work or equipment.

1.9 FIELD MEASUREMENTS

A. Verify field measurements prior to fabrication.

1.10 INSPECTION

A. All work and materials shall be subject at all times to inspection by the Owner's Representative and by the agencies having jurisdiction.

B. Any work or materials found to be damaged or defective or not conforming to the requirements of the Drawings or Specifications, or to the approved finish aesthetic appearance of the job, shall be removed and replaced as directed by the Owner's Representative.

1.11 ELECTRICAL REQUIREMENTS

A. All electrical work, equipment, wiring, devices, and components shall comply with the requirements of local and national electrical codes and with Division 16.

B. All electrical equipment, devices, and components that are tested by Underwriters Laboratories, Inc. shall be UL listed and shall bear a UL label.

C. Unless otherwise indicated on the electrical drawings, all mechanical equipment motors and controls shall be furnished, set in place, and wired in accordance with the following schedule. (Carefully coordinate all work with Division 16.) Refer to Division 16 for motor characteristics and motor controls.

	FURNISHED UNDER DIVISION	SET IN PLACE BY DIVISION	LINE VOLTAGE POWER UNDER DIVISION	MECH CONTROL
Equipment Motors	15	15	16	15
VFD Starters: a. Automatically controlled	15	16	16	15
b. In packaged equipment	15	15	16	15
Magnetic Motor Starters: a. Automatically controlled	16	16	16	15
b. Manually controlled	16	16	16	15
c. In packaged equipment	15	15	16	15
d. Disconnect switches, manual motor starters, thermal overload switches not provided with starter	16	16	16	--

	FURNISHED UNDER DIVISION	SET IN PLACE BY DIVISION	LINE VOLTAGE POWER UNDER DIVISION	MECH CONTROL
e. Control relays, transformers, time clocks, thermostats, motor valves, float controls, damper motors, EP and PE switches and other miscellaneous Division 15 controls	15	15	16	15
f. Fire alarm shutdown contacts at DDC System	16	16	16	15
g. Power Outage shutdown contacts at DDC Systems	16	16	-	15
h. Occupancy sensors for DDC monitoring by BACnet or hardwired	16	16	16	15
i. Communications to UAF Network	16	16	-	Connect to Telecom Jack by 15
j. UPS for Control Systems	15	15	16	15

D. Where Drawings clearly and explicitly differ from preceding paragraphs, Drawings have precedence.

E. Factory wired assemblies and panels shall be prewired to numbered terminal strips for connection to field wiring.

1.12 USE OF HEATING SYSTEMS DURING CONSTRUCTION

A. The Contractor is free to use or operate the heating system, provided the operation is approved in writing by the Owner's Representative. Operation of the air delivery system during construction shall only be done with specified filters properly installed.

B. When construction is complete, the Contractor shall install new filters at no additional expense to the Owner. The Contractor shall pay for all energy used until acceptance of the building.

1.13 GUARANTEE

A. Neither the final certificate of payment, nor any provision in the Contract Documents, nor partial or entire occupancy of the premises by the Owner shall constitute an acceptance of work not done in accordance with the Contract Documents or relieve the Contractor of liability in respect to any express warranties or responsibilities for faulty materials or workmanship.

B. The Contractor shall remedy any defects in the work and pay for any damage to other work resulting therefrom which shall appear within a period one year form the date of final acceptance of work, unless a longer period is specified. The Owner's Representative will give notice of observed defects with reasonable promptness.

1.14 OPERATING AND MAINTENANCE DATA

A. The Contractor shall prepare operating and maintenance instructions containing information to operate, prolong service life or replace parts of the work. Operating and maintenance data shall specifically include:
   1. List of all contractors' and subcontractors' names, addresses, and telephone numbers.
   2. List of all equipment and material manufacturers' local representatives and suppliers and their addresses and telephone numbers.
   3. Nameplate directory with a list of all equipment indicating designation, location of equipment, manufacturers' name, model number, serial number, electrical characteristics, primary control switch location and normal position of switch.
   4. Valve directory indicating valve number, size, location, function, service, type, and normal position.
   5. Air and hydronic test and balance report.

B. Equipment Literature: For all equipment, fixtures, devices, valves and specialties, provide the following:
   1. Manufacturer's data sheets and cut sheets.
   2. Model and serial numbers.
   3. Capacity curves, charts and calculations.
   4. Electrical characteristics.
   5. Replacement parts list.
   6. Manufacturer's instructions for operation and maintenance.
   7. Completely mark out on all literature sheets all non-applicable items.

C. System Schematic Drawings:
   1. System Schematic Drawings: The Contractor shall produce and include in the maintenance manuals, simplified schematic drawings of the mechanical systems, specifically including, but not necessarily restricted to, the following systems:
      a. Hydronic heating systems.
      b. Ventilation and exhaust systems.
      c. HVAC DCC systems.
   2. Schematic drawings shall: Show in simplified form, major equipment and equipment components, control dampers, control valves and valves or devices used during normal system operation, maintenance work or emergency functions.
      a. Show the primary flow paths for air and hydronic systems.
      b. Reference all shown equipment, devices, ducts, zones, controls devises, piping and valves by the designations and identification tags listed in the valve directory, nameplate directory, duct schedule and pipe coding schedules.

D. Master Maintenance Schedule: List each item of equipment requiring inspection and maintenance, showing component maintenance required and the intervals when such inspection and maintenance shall be performed (daily, weekly, monthly, semi-annually, etc.). For each item, reference the page within the maintenance manual where detailed manufacturer's maintenance instructions can be found.

PART 2 PRODUCTS

2.1 MATERIALS AND EQUIPMENT

A. Materials and equipment shall be those of major and reputable manufacturers with ability to render competent and thorough service through local organizations and expeditiously to provide spare parts.

B. In addition to material and equipment specified, also provide incidental materials required to effect complete installation. Such incidental materials include solders, tapes, caulkings, mastics, gaskets, etc.

C. Mixes, Compounds, Dopes, Tapes and Fluxes: All mixes, compounds, dopes, tapes and fluxes shall be fresh, highest quality, free of contaminants, of the type and grade suitable for the intended use in each case. Where more than one type of mix, etc. is specified for the same service, select one type; however, state which type is proposed for use in the submittal material and in no case more than one type is to be used in a specific mechanical system. Where two or more units of the same mix, etc., are required, provide products of a single manufacturer. Provide mixes, etc., bearing approval stamps wherever standards have been established. Comply with governing regulations and industry standards for selections, and with manufacturers' recommendations where applicable.

D. Valves, piping specialties, and escutcheons and access panels to be of same manufacturer throughout installation even though they may be specified in different Divisions of these specifications.

E. All materials and equipment shall be free of asbestos. Mixes, fluxes, and solders shall be free of lead. Submit certification no asbestos or lead based materials have been used or installed.

F. Provide all special tools and extra materials required for maintenance of installed equipment as follows:
1. Furnish two pressure gages.
2. Furnish one extra 55 gallon drum of propylene glycol.
3. Furnish two sets of belts for each fan.
4. Furnish one set of filters for each unit.

2.2 PRODUCT DELIVERY, STORAGE, AND HANDLING

A. All materials shall be new, unused, and delivered to the job site packed in their original containers.

B. All materials shall be delivered free of damage or defects.

C. Provide adequate storage facilities at the job site to protect materials from damage or corrosion.

D. Protect material, equipment, and apparatus provided under this Division from damage, water, dust, etc., both in storage and installed until final completion has been filed. Materials, equipment, or apparatus damaged because of improper storage or protection will be rejected and must be removed from site.

E. Piping, ductwork and all similar equipment shall be capped or protected during storage and installation to protect from construction debris and dust contamination.

PART 3 EXECUTION

3.1 PREPARATION

A. The Contractor shall lay out all work in advance of construction and shall determine the correct location and placement of all material and equipment.

B. Schedule all work in coordination with that of other trades in order to avoid delays in construction and unnecessary cutting and patching.

3.2 INSTALLATION

A. All work shall be installed neatly and in accordance with the best practices in the trade.

B. Workmanship must be of highest quality, done by persons especially skilled at assigned tasks, resulting in neat, clean, and well-done installations consistent with best practices of trades.

C. Repair or replace materials and parts of premises that become damaged as a result of installation of work of this Division. Remove replaced parts from the premises.

D. Insure installation is performed per the manufacturer’s instructions.

3.3 OPERATING AND MAINTENANCE INSTRUCTION

A. Mechanical Instruction: The Contractor shall provide a minimum of 8 hours of instruction on the operation and maintenance of all mechanical systems to maintenance personnel.

B. Instruction shall be performed by a qualified technician.

C. Instruction of major pieces of equipment shall be given by a factory certified representative.

D. The instruction shall consist of both a “classroom” period and a “field” period.

E. The classroom portion shall consist of a brief discussion of each piece of equipment, using the maintenance manual as a guide, and a general preventive maintenance discussion of system as a whole; e.g., discuss procedure for maintaining proper glycol heat transfer solution mixture, etc.

F. The field portion shall consist of a building walk-through to physically locate and examine each piece of equipment previously discussed. At that time, the main points discussed during the classroom portion shall be recovered while pointing out the specific grease fitting or valve, etc.

G. Certification: The Contractor shall submit, prior to or at the time of Substantial Completion and before the Owner will accept responsibility for maintenance and operation of the facility, certification that instructions of maintenance and operation procedures have been given to the Owner's Representative responsible for the maintenance and operation of the facility.
   1. The certification shall indicate the name and be affixed with the signature(s) of the person(s) receiving the instructions, the dates of instruction, the names of the Contractor or subcontractor giving the instructions, and shall list the appropriate areas of instruction. Until these requirements are met, the Contractor shall provide at least one maintenance mechanic, acceptable to the Owner's Representative, to operate and maintain the facility's system(s).

3.4 START-UP / DEMONSTRATION (as specified in Division 01):

A. Provide the services of a factory trained technician for the start-up and testing of the following equipment:
   1. HVAC DDC building controls.

B. Prepare and submit complete start-up testing and demonstration plans 30 days prior to schedule test, start-up, or demonstration date. All mechanical systems shall be demonstrated for proper operation. The demonstration plan shall clearly identify each system and piece of equipment and the proposed demonstration.

C. Following successful testing and start-up, submit certifications that the equipment and/or systems are operating properly.

END OF SECTION

PART 1 GENERAL

1.1 SUMMARY

A. Section Includes:
1. Pipe hangers and supports.
2. Hanger rods.
3. Inserts.
4. Flashing.
5. Equipment curbs.
6. Sleeves.
7. Mechanical sleeve seals.
8. Formed steel channel.
9. Firestopping relating to HVAC work.
10. Firestopping accessories.
11. Equipment bases and supports.

1.2 REFERENCES

A. American Society of Mechanical Engineers:
1. ASME B31.1 - Power Piping.
2. ASME B31.5 - Refrigeration Piping.
3. ASME B31.9 - Building Services Piping.

B. ASTM International:
1. ASTM E84 - Test Method for Surface Burning Characteristics of Building Materials.
2. ASTM E119 - Method for Fire Tests of Building Construction and Materials.
3. ASTM E814 - Test Method of Fire Tests of Through Penetration Firestops.
4. ASTM F708 - Standard Practice for Design and Installation of Rigid Pipe Hangers.
5. ASTM E1966 - Standard Test Method for Fire-Resistive Joint Systems.

C. American Welding Society:
1. AWS D1.1 - Structural Welding Code - Steel.

D. FM Global:
1. FM - Approval Guide, A Guide to Equipment, Materials & Services Approved By Factory Mutual Research For Property Conservation.

E. Manufacturers Standardization Society of the Valve and Fittings Industry:
1. MSS SP 58 - Pipe Hangers and Supports - Materials, Design and Manufacturer.
2. MSS SP 69 - Pipe Hangers and Supports - Selection and Application.
3. MSS SP 89 - Pipe Hangers and Supports - Fabrication and Installation Practices.

F. Underwriters Laboratories Inc.:
1. UL 263 - Fire Tests of Building Construction and Materials.
2. UL 723 - Tests for Surface Burning Characteristics of Building Materials.
3. UL 1479 - Fire Tests of Through-Penetration Firestops.

4. UL 2079 - Tests for Fire Resistance of Building Joint Systems.
5. UL - Fire Resistance Directory.

G. Intertek Testing Services (Warnock Hersey Listed):
1. WH - Certification Listings.

1.3 DEFINITIONS

A. Firestopping (Through-Penetration Protection System): Sealing or stuffing material or assembly placed in spaces between and penetrations through building materials to arrest movement of fire, smoke, heat, and hot gases through fire rated construction.

1.4 SYSTEM DESCRIPTION

A. Firestopping Materials: ASTM E119, ASTM E814, UL 263, UL 1479] to achieve fire ratings for adjacent construction, but not less than 1 hour fire rating.

B. Surface Burning: ASTM E84, UL 723 with maximum flame spread / smoke developed rating of 25/450.

C. Firestop interruptions to fire rated assemblies, materials, and components.

1.5 PERFORMANCE REQUIREMENTS

A. Firestopping: Conform to applicable code for fire resistance ratings and surface burning characteristics.

B. Firestopping: Provide certificate of compliance from authority having jurisdiction indicating approval of materials used.

1.6 SUBMITTALS

A. Shop Drawings: Indicate system layout with location including critical dimensions, sizes, and pipe hanger and support locations and detail of trapeze hangers.

B. Product Data:
1. Hangers and Supports: Submit manufacturers catalog data including load capacity.
2. Firestopping: Submit data on product characteristics, performance and limitation criteria.

C. Design Data: Indicate load carrying capacity of trapeze, multiple pipe, and riser support hangers. Indicate calculations used to determine load carrying capacity of trapeze, multiple pipe, and riser support hangers.

D. Manufacturer's Installation Instructions:
1. Hangers and Supports: Submit special procedures and assembly of components.
2. Firestopping: Submit preparation and installation instructions.

E. Engineering Judgements: For conditions not covered by UL or WH listed designs, submit judgements by licensed professional engineer suitable for presentation to authority having jurisdiction for acceptance as meeting code fire protection requirements.

1.7 ENVIRONMENTAL REQUIREMENTS

A. Do not apply firestopping materials when temperature of substrate material and ambient air is below 60 degrees F.

B. Maintain this minimum temperature before, during, and for minimum 3 days after installation of firestopping materials.

PART 2 PRODUCTS

2.1 PIPE HANGERS AND SUPPORTS

A. Hydronic Piping:
1. Hangers for Pipe Sizes 1/2 to 1-1/2 inch: Malleable iron or Carbon steel, adjustable swivel, split ring.
2. Hangers for Cold Pipe Sizes 2 inches and Larger: Carbon steel, adjustable, clevis.
3. Hangers for Hot Pipe Sizes 2 to 4 inches: Carbon steel, adjustable, clevis.
4. Hangers for Hot Pipe Sizes 6 inches and Larger: Adjustable steel yoke, cast iron roll, double hanger.
5. Multiple or Trapeze Hangers: Steel channels with welded spacers and hanger rods.
6. Multiple or Trapeze Hangers for Hot Pipe Sizes 6 inches and Larger: Steel channels with welded spacers and hanger rods, cast iron roll.
7. Wall Support for Pipe Sizes 3 inches and Smaller: Cast iron hooks.
8. Wall Support for Pipe Sizes 4 inches and Larger: Welded steel bracket and wrought steel clamp.
9. Wall Support for Hot Pipe Sizes 6 inches and Larger: Welded steel bracket and wrought steel clamp with adjustable steel yoke and cast iron roll.
10. Vertical Support: Steel riser clamp.
11. Floor Support for Cold Pipe: Cast iron adjustable pipe saddle, lock nut, nipple, floor flange, and concrete pier or steel support.
12. Floor Support for Hot Pipe Sizes 4 Inches and Smaller: Cast iron adjustable pipe saddle, lock nut, nipple, floor flange, and concrete pier or steel support.
13. Floor Support for Hot Pipe Sizes 6 inches and Larger: Adjustable cast iron roll and stand, steel screws, and concrete pier or steel support.
14. Copper Pipe Support: Copper-plated, carbon steel ring.

2.2 INSERTS

A. Inserts: Malleable iron case of steel shell and expander plug for threaded connection with lateral adjustment, top slot for reinforcing rods, lugs for attaching to forms; size inserts to suit threaded hanger rods.

2.3 SLEEVES

A. Sleeves for Pipes Through Non-fire Rated Floors: 18 gage thick galvanized steel.

B. Sleeves for Pipes Through Non-fire Rated Beams, Walls, Footings, and Potentially Wet Floors: Steel pipe or 18 gage thick galvanized steel.

C. Sleeves for Round Ductwork: Galvanized steel.

D. Sleeves for Rectangular Ductwork: Galvanized steel or wood.

E. Sealant: Acrylic.

2.4 MECHANICAL SLEEVE SEALS

A. Product Description: Modular mechanical type, consisting of interlocking synthetic rubber links shaped to continuously fill annular space between object and sleeve, connected with bolts and pressure plates causing rubber sealing elements to expand when tightened, providing watertight seal and electrical insulation.

2.5 FORMED STEEL CHANNEL

A. Product Description: Galvanized 12 gage thick steel. With holes 1-1/2 inches on center.

2.6 FIRESTOPPING

A. Product Description: Different types of products by multiple manufacturers are acceptable as required to meet specified system description and performance requirements; provide only one type for each similar application.
   1. Silicone Firestopping Elastomeric Firestopping: Single component silicone elastomeric compound and compatible silicone sealant.
   2. Foam Firestopping Compounds: Single component foam compound.
   3. Formulated Firestopping Compound of Incombustible Fibers: Formulated compound mixed with incombustible non-asbestos fibers.
   4. Fiber Stuffing and Sealant Firestopping: Composite of mineral or ceramic fiber stuffing insulation with silicone elastomer for smoke stopping.
   5. Mechanical Firestopping Device with Fillers: Mechanical device with incombustible fillers and silicone elastomer, covered with sheet stainless steel jacket, joined with collars, penetration sealed with flanged stops.
   6. Intumescent Firestopping: Intumescent putty compound which expands on exposure to surface heat gain.
   7. Firestop Pillows: Formed mineral fiber pillows.

2.7 FIRESTOPPING ACCESSORIES

A. Primer: Type recommended by firestopping manufacturer for specific substrate surfaces and suitable for required fire ratings.

B. Dam Material: Permanent:
   1. Mineral fiberboard.
   2. Mineral fiber matting.
   3. Sheet metal.
   4. Plywood or particle board.
   5. Alumina silicate fire board.

C. Installation Accessories: Provide clips, collars, fasteners, temporary stops or dams, and other devices required to position and retain materials in place.

D. General:
   1. Furnish UL listed products.
   2. Select products with rating not less than rating of wall or floor being penetrated.

E. Non-Rated Surfaces:
   1. Stamped steel, chrome plated, hinged, split ring escutcheons or floor plates or ceiling plates for covering openings in occupied areas where piping is exposed.
   2. For exterior wall openings below grade, furnish mechanical sealing device to continuously fill annular space between piping and cored opening or water-stop type wall sleeve.

PART 3 EXECUTION

3.1 EXAMINATION

A. Verify openings are ready to receive sleeves.

B. Verify openings are ready to receive firestopping.

3.2 PREPARATION

A. Clean substrate surfaces of dirt, dust, grease, oil, loose material, or other matter affecting bond of firestopping material.

B. Remove incompatible materials affecting bond.

C. Install materials to arrest liquid material leakage.

D. Do not drill or cut structural members.

3.3 INSTALLATION - INSERTS

A. Install inserts for placement in concrete forms.

B. Install inserts for suspending hangers from reinforced concrete slabs and sides of reinforced concrete beams.

C. Provide hooked rod to concrete reinforcement section for inserts carrying pipe 4 inches and larger.

D. Where concrete slabs form finished ceiling, locate inserts flush with slab surface.

E. Where inserts are omitted, drill through concrete slab from below and provide through-bolt with recessed square steel plate and nut.

3.4 INSTALLATION - PIPE HANGERS AND SUPPORTS

A. Support horizontal piping as scheduled.

B. Install hangers with minimum 1/2 inch space between finished covering and adjacent work.

C. Place hangers within 12 inches of each horizontal elbow.

D. Use hangers with 1-1/2 inch minimum vertical adjustment.

E. Support vertical piping at every floor.

F. Where piping is installed in parallel and at same elevation, provide multiple pipe or trapeze hangers.

G. Support riser piping independently of connected horizontal piping.

H. Design hangers for pipe movement without disengagement of supported pipe.

I. Provide clearance in hangers and from structure and other equipment for installation of insulation.

3.5 INSTALLATION - EQUIPMENT BASES AND SUPPORTS

A. Provide housekeeping pads of concrete, minimum 3-1/2 inches thick and extending 6 inches beyond supported equipment.

B. Using templates furnished with equipment, install anchor bolts, and accessories for mounting and anchoring equipment.

C. Provide rigid anchors for pipes after vibration isolation components are installed

3.6 INSTALLATION - SLEEVES

A. Exterior watertight entries: Seal with mechanical sleeve seals.

B. Set sleeves in position in forms. Provide reinforcing around sleeves.

C. Size sleeves large enough to allow for movement due to expansion and contraction. Provide for continuous insulation wrapping.

D. Extend sleeves through floors 1 inch above finished floor level. Caulk sleeves.

E. Where piping or ductwork penetrates floor, ceiling, or wall, close off space between pipe or duct and adjacent work with stuffing or firestopping insulation and caulk airtight. Provide close fitting metal collar or escutcheon covers at both sides of penetration.

F. Install stainless steel escutcheons at finished surfaces.

3.7 INSTALLATION - FIRESTOPPING

A. Install material at fire rated construction perimeters and openings containing penetrating sleeves, piping, ductwork, and other items, requiring firestopping.

B. Apply primer where recommended by manufacturer for type of firestopping material and substrate involved, and as required for compliance with required fire ratings.

C. Apply firestopping material in sufficient thickness to achieve required fire and smoke rating to uniform density and texture.

D. Compress fibered material to maximum 40 percent of its uncompressed size.

E. Fire Rated Surface:
1. Seal opening at wall and floor as follows:
a. Install sleeve through opening and extending beyond minimum of 1 inch on both sides of building element.
b. Size sleeve allowing minimum of 1 inch void between sleeve and building element.
c. Pack void with backing material.
d. Seal ends of sleeve with UL listed fire resistive silicone compound to meet fire rating of structure penetrated.

F. Non-Rated Surfaces:
1. Seal opening through non-fire rated wall and floor as follows:
a. Install sleeve through opening and extending beyond minimum of 1 inch on both sides of building element.
b. Size sleeve allowing minimum of 1 inch void between sleeve and building element.
c. Install type of firestopping material recommended by manufacturer.

3.8 CLEANING

A. Clean adjacent surfaces of firestopping materials.

3.9 PROTECTION OF FINISHED WORK

A. Protect adjacent surfaces from damage by material installation.

3.10 SCHEDULES

A. Copper and Steel Pipe Hanger Spacing:

PIPE SIZE Inches	COPPER TUBING MAXIMUM HANGER SPACING Feet	STEEL PIPE MAXIMUM HANGER SPACING Feet	COPPER TUBING HANGER ROD DIAMETER Inches	STEEL PIPE HANGER ROD DIAMETER Inches
1/2	5	7	3/8	3/8
3/4	5	7	3/8	3/8
1	6	7	3/8	3/8
1-1/4	7	7	3/8	3/8
1-1/2	8	9	3/8	3/8
2	8	10	3/8	3/8
2-1/2 (Note 2)	9	11	1/2	1/2
3	10	12	1/2	1/2
4	12	14	1/2	5/8
5	13	16	1/2	5/8
6	14	17	5/8	3/4
8	16	19	3/4	3/4
10	18	22	3/4	7/8
12	19	23	3/4	7/8
14	22	25	7/8	1
16	23	27	7/8	1
18	25	28	1	1
20	27	30	1	1-1/4
24	28	32	1-1/4	1-1/4

B. Plastic and Ductile Iron Pipe Hanger Spacing:

PIPE MATERIAL	MAXIMUM HANGER SPACING Feet	HANGER ROD DIAMETER Inches
ABS (All sizes)	4	3/8
FRP (All Sizes)	4	3/8
Ductile Iron (Note 2)		
PVC (All Sizes)	4	3/8

C. Note 1: Refer to manufacturer's recommendations for grooved end piping systems.

D. Note 2: 20 feet maximum spacing, minimum of one hanger for each pipe section close to joint behind bell. Provide hanger at each change of direction and each branch connection. For pipe sizes 6 inches and smaller, subjected to loadings other than weight of pipe and contents, limit span to maximum spacing for water service steel pipe.

END OF SECTION

[This page intentionally left blank]

PART 1 GENERAL

1.1 SUMMARY

A. Section Includes:
1. Bases.
2. Vibration isolators.
3. Seismic Restraints.
4. Duct attenuators.
5. Ductwork lagging.

1.2 REFERENCES

A. Air Movement and Control Association International, Inc.:
1. AMCA 300 - Reverberant Room Method for Sound Testing of Fans.

B. American National Standards Institute:
1. ANSI S1.4 - Sound Level Meters.

C. American Society of Heating, Refrigerating and:
1. ASHRAE Handbook - HVAC Applications.

D. American Society for Testing and Materials:
1. ASTM C94 - Standard Specifications for Ready-Mixed Concrete

E. Sheet Metal and Air Conditioning Contractors':
1. SMACNA - HVAC Duct Construction Standard - Metal and Flexible.
2. SMACNA – Seismic Restraint Manual.

1.3 PERFORMANCE REQUIREMENTS

A. General
1. Provide resilient earthquake restraints with suitable structural support for all vibration isolated equipment and piping as specified herein and shown on the drawings and in the vibration isolation schedule.
2. Restraints shall be attached to structural members capable of withstanding the design dynamic load specified below.
3. Contractor shall be responsible for ensuring that the dynamic load capacity of the attachment bolts and supporting structure is greater than or equal to the capacity of the seismic restraint.
4. Contractor shall also coordinate the size of concrete piers and housekeeping pads to ensure adequate room for the isolators and the restraints.
5. Design of the seismic restraints shall be stamped and signed by a registered civil or structural engineer.
6. Design, Select and size equipment, braces, supports and anchors.
7. Accommodate vibration and thermal movement.
8. Restraint to meet IBC requirements.

B. Work under this section shall include furnishing all labor, material, tools, and equipment necessary for the complete installation of all vibration isolation and seismic restraint for mechanical equipment, piping, ductwork, and stacks as specified and shown. Methods and materials specified in this section are minimum requirements and shall not excuse the Contractor from the responsibility of meeting the criteria specified. All changes and additions required to meet the criteria shall be made without cost to the owner. Peak vibration velocities measured on the bearing caps of rotating equipment shall not exceed 0.08 ins/sec when the equipment is running at its operating speed.

C. To qualify for approval, manufacturer shall certify in writing that he has the required engineering and testing facilities, and registered engineering personnel.

D. A single manufacturer shall furnish all isolation products including steel bases and inertia base forms. Exceptions: Canvas or lead vinyl duct connections, and concrete in inertial bases. Also excepted is the provision of spring isolators installed as an integral part of equipment mounted within cabinets fabricated by the equipment manufacturer, e.g. internally isolated air handling units. Not withstanding, all of the isolators shall conform to the product requirements of these specifications.

E. The manufacturer is responsible for the following:
   1. Selecting vibration isolators and seismic control devices meeting Contract Document requirements.
   2. Furnishing shop drawings.
   3. Coordinating selection of piping supports with equipment supports to maintain uniformly efficient isolation throughout each system, while accommodating vibration, expansion, and contraction, without creating excessive stresses and objectionable noises at equipment connections, ductwork, or in piping.
   4. Reviewing equipment manufacturer's literature and ensuring that procedures for setting and adjusting all isolation devices are in accord with recommendations.

F. Provide vibration isolation on motor driven equipment over 0.5 hp, plus connected piping and ductwork.

G. Maintain sound level of spaces at levels not to exceed those listed below by utilizing acoustical devices.

1.4 SUBMITTALS

A. Submit under the provisions of Division 1 and Section 15010.

B. Shop Drawings:
   1. Indicate inertia bases and locate vibration isolators, with static and dynamic load on each. Drawings of all bases showing dimensions, center of gravity of the equipment, individual isolators for each support point, details of mounting brackets for isolators, location for all equipment mounting bolts and size and locations of concrete supports for the isolators.
   2. Drawings and details showing the capacity, location, and arrangement of seismic restraints.

C. Product Data: Submit schedule of vibration isolator type including model number with location and load on each. Submit catalog information indicating, materials, dimensional data, pressure losses, and acoustical performance for standard sound attenuation products.

D. Seismic restraint designs and/or model number.

E. Detailed calculations showing the weight distribution for each equipment support point (as calculated, not averaged), and calculations showing the loads at each isolator.

F. Size, type, load, and static deflection for each isolator.

G. Manufacturer's Installation Instructions: Submit special procedures and setting dimensions. Indicate installation requirements maintaining integrity of sound isolation.

H. All submittals shall be stamped and signed by the manufacturer’s registered professional engineer.

1.5 CLOSEOUT SUBMITTALS

A. Submit operations and maintenance data under provisions of Division 1 and section 15010.

B. Project Record Documents: Record actual locations of hangers and seismic restraints including attachment points.

1.6 SPECIAL QUALIFICATIONS

A. Manufacturer: Company specializing in manufacturing products specified in this section with minimum three years’ experience and engineering, testing facilities, and registered engineering personnel.

B. Installer: Company specializing in performing Work of this section with minimum three years experience.

PART 2 PRODUCTS

2.1 BASES

A. Manufacturer:
1. Mason Industries
2. Amber Booth.

B. General
1. All bases shall be sized to include equipment and motor without overhang.
2. Structural beam or channel members shall form the perimeter framing. Beam depth shall be at least 1/12th the longest span. Spans less than 6 feet shall have a beam depth of 6 inches. Welded steel end closure over ends of I beams.

3. Use diagonal beams or channel braces equal to 1/2 depth of perimeter beam when the longest beam dimension exceed 8 feet.
4. Provide earthquake bumpers to prevent excessive motion during starting and for earthquake bracing. Bumpers shall be installed after equipment is in operation to allow proper placement and alignment and to ensure that the bumpers are not engaged during normal system operation.
5. Motor driven equipment shall be mounted with motors on a common base of sufficient rigidity to maintain permanent alignment.
6. All bases shall have clearance of 1 1/2 inches between top of floor and underside of base.

C. Mounting Brackets MB-1
1. Mounting brackets sized to match vibration isolator and designed to mount directly to structural frame of mechanical equipment without the use of a separate structural steel frame.

D. Equipment Base SB-1
1. Structural steel rectangular base with cross members to prevent twisting where longest beam dimension exceeds 6 ft.
2. Use welded steel and closure plates over the end of the I beams for stiffness
3. Use height-saving brackets for side mounting of isolators.
4. Design: Sufficiently rigid to prevent misalignment or undue stress on machine, and to transmit design loads to isolators and snubbers.
5. Construction: Welded structural steel with gusset brackets, supporting equipment and motor with motor slide rails.

2.2 VIBRATION ISOLATORS

A. Manufacturers:
1. Mason Industries.
2. Amber Booth.

B. Steel Spring Isolators
1. General
a. Required types of springs and spring deflections for isolators supporting various pieces of equipment are tabulated in the vibration isolation schedule in this section.
b. All isolators for a single piece of equipment shall have approximately equal spring deflection.
c. Ends of springs shall remain parallel during deflection.
d. For each spring, provide a built-in leveling bolt.
e. Equipment must be mounted absolutely level.
f. All springs must be selected for additional 50 percent capacity to solid.
g. Provide sheet neoprene pad, Type E-1, minimum 1/4 inch thickness, bonded to the underside of the baseplate or spring to serve as a noise breaker. Select pad area and durometer to achieve a static deflection between 0.04 and 0.06 inches.

h. Isolators installed out of doors shall be designed to provide restraint due to wind loads of 30 pounds per square foot, applied on surface of equipment, without failure.
i. Installed isolators shall be adjustable and easily removed for replacement.
j. Use height saving brackets as required to achieve 1 inch clearance (+/- 1/2 inch) between base and housekeeping pad.
k. Springs must be rigidly attached, by welding or other approved means, to baseplate and top plate, except for spring hangers.
l. Springs shall be designed for minimum ratio of horizontal to vertical spring stiffness of 0.8 and minimum ratio of spring diameter to spring operating height of 0.8.
m. All floor mounted spring isolators shall have bolt holes in bases and be anchored to structure with isolated restraining bolts. Isolate bolts from base with neoprene grommets and neoprene washers. Anchor bolts shall not compress neoprene grommets and washers more than 10 percent of normal thickness.
n. For Exterior and Humid Areas: Furnish hot dipped galvanized housings and neoprene coated springs.
o. Code: Color code springs for load carrying capacity.

2. Freestanding Springs S-1
   a. Adjustable, freestanding, open steel spring mounting with top and base plates designed to allow rigid attachment to the machinery frame and supporting structure, respectively.
   b. Used for equipment that does not encounter weight removal or wind loads.
   c. Neoprene pad must be located under the baseplate and not between the baseplate and spring.
   d. Manufacturer:
      1) Mason SLF.
      2) Amber Booth.
3. Restrained Springs Type S-2
   a. Adjustable open spring isolator, similar to Type S-1, with a frame to include vertical resilient limit stops to prevent spring extension when weight is removed.
   b. For equipment whose operating weight may differ from installed weight.
   c. Mounts shall be designed with fail-safe feature to protect against wind loads and overturning of mounts in earthquakes.
   d. Mounts shall be capable of withstanding lateral accelerations of 1g. Allow 1/2 inch clearance around vertical restraining bolts, with neoprene grommets and washer to prevent restraining bolts from short-circuiting isolation. Limit stops must be out of contact during normal operation.
   e. Manufacturer:
      1) Mason SLR.
      2) Amber Booth.

4. Spring Hanger Type SH-1
   a. Steel box frame, open on two sides, containing an open steel spring capable of supporting twice the rated load without reaching the yield point.
   b. Spring mounted in a molded neoprene isolation bushing.
   c. Spring diameters and lower hole sizes large enough to permit hanger rod to swing through 30 degree arc before contacting hole and short-circuiting spring.
   d. Provide hole in top of box for bolting to structure.
   e. Misalignment: Capable of 20 degree hanger rod misalignment
   f. Submittals shall include scale drawing of hanger showing misalignment capability.
   g. Manufacturer:
      1) Mason HS.
      2) Amber Booth.
5. Spring Hanger Type SH-2
   a. Same as SH-1 but hanger shall be pre-compressed to the rated deflection to keep equipment or piping at fixed elevation during installation.
   b. Hangers shall have release mechanism to free spring after installation is complete and hanger is subjected to full load.
   c. Manufacturer:
      1) Mason PCHS.
      2) Amber Booth.
6. Thrust Restraint Type TR-1 (compression)
   a. Horizontal thrust restraint. Two units per fan.
   b. Spring assembly with rods, clips, and miscellaneous hardware.
   c. Reinforce plenum partition with 21/2 inch x 21/2 inch x 1/4 inch channels to withstand force of thrust restraint.
   d. Install in compression.
   e. Manufacturer:
      1) Mason WBI.
      2) Amber Booth.

C. Neoprene Isolators
1. General
   a. Neoprene rubber mounts and pads shall contain a minimum 5 percent pure neoprene rubber.
   b. When used in locations that prevent easy replacement, use bridge bearing stock that contains a minimum 40 percent pure neoprene rubber.
   c. Use 40 durometer unless otherwise specified or required.
2. Sheet Neoprene Pads Type E-1
   a. Pad mounting consisting of one or two layers approximately 5/16 inch thick ribbed or waffled neoprene pads bonded to a galvanized steel load distribution plate.
   b. Thickness of the load distribution plate shall be sufficient to evenly distribute (± 10 percent) the load over the entire pad.
   c. Pad must be furnished with sufficient area to achieve the static deflection shown in the schedule.

d. If anchoring is mandatory, provide neoprene grommets and washers to prevent anchor bolt from short circuiting isolation.
e. Manufacturer:
   1) Mason MWM.
   2) Amber Booth.

3. Waffle Pad Type E-2
   a. Neoprene waffle pad, top and bottom, with cork sandwiched between neoprene layers.
   b. Thickness of the load distribution plate shall be sufficient to evenly distribute (± 10 percent) the load over the entire pad.
   c. Pad must be furnished with sufficient area to achieve the static deflection shown in the schedule.
   d. If anchoring is mandatory, provide neoprene grommets and washers to prevent anchor bolt from short circuiting isolation.
   e. Manufacturer:
      1) Mason NK.
      2) Amber Booth.
4. Neoprene Hangers Type E-3
   a. Cone-shaped elastomeric mounting made from neoprene with a box frame similar to isolator Type SH-1.
   b. Hanger rod shall penetrate neoprene element and steel frame with sufficient clearance to allow it to swing through a 30 degree arc before contacting neoprene bushing at the perimeter of the hole in the frame.
   c. Provide hole in the top of the box for bolting to structure.
   d. Submittals shall include scale drawing of hanger showing misalignment capability.
   e. Manufacturer:
      1) Mason HD.
      2) Amber Booth.
5. Neoprene Impregnated Washers and Bushings Type E-4
   a. Washers and bushings to be used so as to eliminate direct contact between bolt and equipment.
   b. Washers consisting of multiple layer neoprene impregnated duck.
   c. Washer thickness should be 1/4 inch and maximum loading not to exceed 1000 psi.
   d. Bushings consisting of neoprene impregnated duck tube.
   e. Manufacturer:
      1) Washers, Mason HLW, Bushings, Mason HLB.
      2) Amber Booth.
6. Pipe Anchors and Guides Type E-5
   a. Directional acoustical pipe anchors and guides for vertical piping consisting of telescopic arrangement of two sizes of steel tubing separated by minimum 1/2 inch thickness of heavy duty neoprene and neoprene isolation material.
   b. Vertical restraints shall prevent vertical travel in either direction.
   c. Allowable loads on isolation materials shall not exceed 500 psi and design shall be balanced for equal resistance in any direction.

d. Manufacturer:
   1) Mason ADA.
   2) Amber Booth.

7. Neoprene Mounting with Captive Steel Inserts Type E-6
   a. Captive neoprene mountings shall consist of a steel housing with a captive steel insert embedded in neoprene to prevent contact between the housing and the central threaded insert. Bonded assemblies without mechanical interlocks are not acceptable.
   b. All mountings shall have at minimum 1.0 horizontal G ratings. All mountings shall have bolts for rigid attachment to the equipment and adequate base bolting provision. Mountings shall have a minimum static deflection of 0.15 inch.
   c. Manufacturer
      1) Mason RBA, RCA, or RDA.
      2) Amber Booth.

D. Flexible Connectors
1. General
   a. Flexible connectors shall be constructed flexible stainless steel hose and shall have stainless steel braid and carbon steel fittings. Sizes 3 inch and larger shall be flanged.
   b. The connector shall be terminated at both ends with either a flange or threaded fitting.
   c. Connectors shall have a minimum burst pressure of 500 psi and a recommended maximum operating pressure that is greater than the design operating pressure at the temperature of the fluid.
   d. All piping shall be properly aligned prior to the installation of the flexible connectors.
   e. Flexible connectors shall not be used to compensate for misalignment of the piping.
   f. Manufacturer:
      1) Mason Type BSS.
      2) Amber Booth.
2. Flex Connector Type FC-1
   a. Neoprene connector that incorporates a 90 degree elbow turn.
   b. Design shall be such as to allow relative movement between the flanges in any direction up to 0.625 inch.
   c. The recommended maximum operating pressure shall be at least 150 psi at temperatures below 220 degrees F.
   d. Manufacturer:
      1) Mason MFNEC
      2) Amber Booth.
3. Flex Connector Type FC-2
   a. Neoprene connector single-sphere design for installation in a section of straight pipe.

b. Design shall be to allow relative movement between the flanges as follows:

Pipe Size	Axial Compression	Axial Elongation
less than 2 inch	.375 inch	.250 inch
2.5 inch	.500 inch	.250 inch
3 inch	.625 inch	.250 inch
4 inch	.750 inch	.375 inch
5 inch - 6 inch	.875 inch	.375 inch
over 7 inch	1.000 inch	.625 inch

c. The recommended maximum operating pressure shall be at least 150 psi at temperatures below 220 degrees F.

d. Manufacturer:
   1) Mason MFEJ.
   2) Amber Booth.

E. Felt and Neoprene Pipe Collars

1. Cushion Sleeve C-1
   a. A felt or neoprene pad of minimum 1/4 inch thickness which has been treated to resist moisture, abrasion, and temperature, and to repel vermin which can be used in conjunction with hangers, pipe clamps and rolls to act as a noise and vibration isolator between piping and its supporting or suspension system.
   b. Sleeve shall be split or hinged and shall possess an exterior metal shell to prevent crushing during installation.
   c. Manufacturer:
      1) Stoneman Trisolator.

2. Pipe Penetrations C-2
   a. Pipe to wall or floor closures shall be modular, interlocking synthetic rubber seals shaped to continuously fill the annular space between the pipe and the wall or floor opening.
   b. Links shall be loosely assembled with bolts to form a continuous rubber belt around the pipe with a pressure plate under each bolt head and nut.
   c. Tightening the bolts shall cause the rubber sealing elements to expand and provide an absolutely water tight seal between the pipe and the wall or floor opening.
   d. Manufacturer:
      1) Link-Seal, manufactured by Thunderline Co.
      2) Advanced Products & Systems, Innerlynx

3. Pipe Penetrations C-3
   a. Pipe to wall or floor closures shall be mechanical, interlocking rubber links working as a fire stop to continuously fill the annular space between the pipe and the wall or floor opening.
   b. Provide U.L. listed intumescent formulation with up to a 2-hour fire protection rating.
   c. Links shall be loosely assembled with bolts to form a continuous rubber link around the pipe.
   d. Tightening the bolts shall cause the rubber sealing elements to expand and provide an absolutely water tight, fireproof seal between the pipe and the wall or floor opening.
   e. Manufacturer:
      1) Metraflex, MetraSeal.

2.3 SEISMIC RESTRAINTS

A. Equipment shall be fitted for the seismic control per the IBC Seismic Site Class Definition of the project site. This facility is considered an essential facility.

B. Seismic Restraint Type SR-1
   1. Snubbers consisting of interlocking steel members (one attached to the equipment frame and the other attached to the building structure) restrained by neoprene rubber compounded to bridge bearing specifications.
   2. Neoprene elements shall be replaceable and have minimum thickness of 3/4 inch at all points.
   3. Restraints shall be installed with factory set clearances of 1/8 inch minimum to 1/4 inch maximum between steel and neoprene elements.
   4. Snubbers shall be installed after the full equipment load is placed on the vibration isolators to ensure that the equipment will not contact the snubber during normal operation.
   5. Snubbers shall be capable of withstanding loads up to 4g in all directions.
   6. Manufacturer:
      a. Mason Z1011.
      b. Amber Booth.

C. Seismic Restraint Type SR-2
   1. Snubbers consisting of interlocking steel members (one attached to equipment frame and the other attached to the building structure) restrained by neoprene rubber compounded to bridge bearing specifications.
   2. Neoprene elements shall be replaceable and have minimum thickness of 1/4 inch at all points.
   3. Restraints shall be installed with factory set clearances of 1/8 inch minimum to 1/4 inch maximum between steel and neoprene elements.
   4. Snubbers shall be installed after the full equipment load is placed on the vibration isolators to ensure that the equipment will not contact the snubber during normal operation.
   5. Snubbers shall be capable of withstanding loads up to 1g in all directions.

6. Manufacturer:
   a. Mason Z1225.
   b. Amber Booth.

D. Seismic Restraint Type SR-3
1. Slack cables rigidly attached to suspended equipment or piping.
2. Attachment to structure shall include an interlocking steel element with a minimum 1/4 inch thick neoprene pad between the interlocking steel members.
3. Cable shall be sized to accommodate dynamic loads up to 1g in all directions without failure.
4. Cables shall have 1/4 inch slack during normal operation of equipment and shall not compromise the efficiency of the vibration isolation hangers.

E. Seismic Housekeeping Pad Anchor, Type PA-1
1. Seismic housekeeping pad anchors shall be installed on all housekeeping pads. The Manufacturer shall size and select pad anchors and calculations shall be submitted and stamped by a registered professional civil or structural engineer.
2. Manufacturer:
   a. Mason HPA
   b. Amber Booth.

2.4 DUCT ATTENUATORS

A. Manufacturers:
1. IAC.
2. Dynasonic.
3. VAW Systems.

B. Description: Duct section with sheet metal outer casing, sound absorbing fill material, and inner casing of perforated sheet metal; incorporating interior baffles of similar construction. Fabricate in accordance with SMACNA HVAC Duct Construction Standards - Metal and Flexible.

C. Tubular Configuration: inner casing and liner, splitters with radius nose and contoured tails, diameter and length as indicated on drawings.

D. Rectangular Configuration: lined splitters with radius nose and contoured tails, modular, size as indicated on drawings.

E. Materials:
1. Outer Casing: Minimum 22 gage thick galvanized steel stiffened with mastic filled lock formed seams, 2 inch long, 11 gage slip joints on both ends.
2. Inner Casing and Splitters: Minimum 24 gage thick perforated galvanized steel.
3. Fill: Glass fiber or mineral wool of minimum 4 lb/cu ft density.
4. Fill Liner: 1 mil Mylar film.

2.5 DUCTWORK LAGGING

A. Acoustic Insulation: 2 inch thick, 3 to 5 lb/cu ft density glass fiber or mineral wool insulation.

B. Covering: Plaster with surface weight minimum 4 lb/sq ft.

PART 3 EXECUTION

3.1 RUSTPROOFING

A. All vibration isolation hardware shall be designed or treated for corrosion resistance.

B. Isolators exposed to the weather shall have steel parts zinc electroplated, PVC coated, plus a coating of neoprene or bitumastic paint. Aluminum components for outdoor installation shall be etched and painted with industrial grade enamel.

C. Nuts, bolts, and washers shall be zinc electroplated.

D. Structural steel bases are to be thoroughly cleaned of welding slag, primed with zinc chromate, and finished with two coats of industrial enamel.

3.2 INSTALLATION

A. Vibration Isolators

1. All mechanical equipment, ductwork and piping (except fire, cast iron waste, vent, and storm drains) shall be isolated from the building structure as specified herein and tabulated in the vibration isolation schedule. No motor driven or circulating fluid piping shall contact the building without isolation. All isolators shall be secured to the building structure unless specifically called for in the vibration isolation specifications and schedule. Provide a balanced set of isolators for each piece of equipment. Select isolators in accordance with equipment weight distribution to allow for no less than the static deflection specified. All isolators for a single piece of equipment shall have approximately equal spring deflection. A minimum of four isolators per unit is required unless otherwise indicated. The isolator adjusting bolt must be mounted vertically in the center of the spring. Housing must have a rubber grommet in the top allowing a minimum of 1/4 inch between the grommet and the adjustable bolt. Use the type of isolator mounting base and seismic restraints that is indicated in the vibration isolation schedule. Equipment must be mounted absolutely level. Each isolator must be numbered and color coded to show location. Code and color shall be marked on the plans, on each equipment isolator, and on each base to ensure proper placement. All isolators shall be clearly stamped or marked to show undeflected height and static deflection so that after the installation and adjustment, deflection under load may be verified to ensure loading is within specified range and isolation is being attained.

B. Piping

1. All piping carrying circulating fluids or pumped gases shall be isolated from the building structure with vibration isolators as specified in the vibration isolation schedule. Piping shall not penetrate floating floors or vibration isolated ceilings unless specifically called for in the drawings. Use type C-2 or C-3 isolators for all piping that passes through the mechanical room floor, walls, or ceiling. The inside diameter of each wall or floor opening shall be sized as recommended by the manufacturer to fit the pipe, isolator and assure a watertight joint.
A flexible neoprene connector type FC-1 or FC-2 is required at the inlet and discharge of all floor supported pumps. Flexible neoprene connections are also required at the connections to the chillers and cooling towers. Horizontally suspended piping shall be suspended from massive structural beams rather than slab diaphragms wherever possible. Do not support vibration isolated piping along with non-isolated piping on a common trapeze. Steel spring hanger boxes shall be rigidly mounted to the supporting structure-not located in the middle of the hanger rod. Rigid pipe anchors are not permitted in vibration isolated piping circuits. When pipe anchors are required, use type E-5. Use type SH hangers at top of pipe riser for vertical pipe risers greater than 30 feet in height. Unless otherwise indicated on drawings, support and anchor with type E-5 pipe clamps only at mid level. Provide type E-5 guides at other levels. Seismic restraints for vibration isolated piping shall be designed to restrict excessive lateral, vertical, and longitudinal motion without providing support of the piping during normal operation. These restraints shall not make rigid contact between piping and the building structure. Details of the seismic restraints must be included in the submittals. Design shall be approved and stamped by a registered civil or structural engineer.

C. Ductwork

1. Ductwork shall be constructed in accordance with applicable SMACNA standards. Flexible connections shall be provided between all fans and connecting ductwork. Support the duct just prior to or following the flexible connector to ensure proper alignment and to avoid binding the connector. Isolate duct penetrations of the floor, walls, and ceiling of all mechanical rooms as follows.
   a. The hole in the floor, wall, or ceiling should be oversized so as to allow a 0.5 to 0.75 inch gap on each side of the duct. An 18 gauge sheet metal sleeve covering the entire perimeter of the hole should be plastered to the wall, ceiling, or floor to ensure an air-tight seal. If the duct penetrates a double wall, separate sleeves should be used on each side of the wall so as to have no direct connection between the walls.
   b. The gap between the penetrating duct and sleeve should be packed with fiber insulation and also sealed on both outer sides with a resilient acoustical sealant. Provide fire rated insulation and sealants when penetrating rated walls or floors. Refer to Section 07900.

D. Support duct attenuators independent of ductwork.

E. Install cross-talk silencers in wall. Calk wall penetrations.

F. Lag ductwork, where indicated by wrapping with insulation and covering. Apply covering to be airtight. Do not attach covering rigidly to ductwork.

G. Attach ductwork to acoustic louvers with flexible duct connections.

H. Install isolation for motor driven equipment.

I. Bases:
   1. Set steel bases for 1 inch clearance between housekeeping pad and base.

J. Adjust equipment level.

K. Install spring hangers without binding.

L. On closed spring isolators, adjust so side stabilizers are clear under normal operating conditions.

M. Prior to making piping connections to equipment with operating weights substantially different from installed weights, block up equipment with temporary shims to final height. When full load is applied, adjust isolators to load to allow shim removal.

N. Provide pairs of horizontal limit springs on fans with more than 6.0 inch static pressure, and on hanger supported, horizontally mounted axial fans.

O. Provide resiliently mounted equipment, piping, and ductwork with seismic snubbers. Provide each inertia base with minimum of four seismic snubbers located close to isolators. Snub equipment designated for post disaster use to 0.05 inch maximum clearance. Provide other snubbers with clearance between 0.15 inch and 0.25 inch.

P. Support piping connections to isolated equipment resiliently as follows:
   1. Up to 4 inch Diameter: First three points of support.
   2. 5 to 8 inch Diameter: First four points of support.
   3. 10 inch Diameter and Over: First six points of support.
   4. Select three hangers closest to vibration source for minimum 1.0 inch static deflection or static deflection of isolated equipment. Select remaining isolators for minimum 1.0 inch static deflection or 1/2 static deflection of isolated equipment.

3.3 FIELD QUALITY CONTROL

A. Inspect isolated equipment after installation and submit report. Include static deflections.

3.4 SCHEDULES

PIPE ISOLATION SCHEDULE

Pipe Size Inch	Minimum Isolated Distance from Equipment
1	120 diameters
2	90 diameters
3	80 diameters
4	75 diameters
6	60 diameters
8	60 diameters
10	54 diameters
12	50 diameters
16	45 diameters
24	38 diameters

3.5 EQUIPMENT ISOLATION SCHEDULE

			ON GRADE MIN				ABOVE GRADE MIN			
Equipment	Note	R.P.M.	Base	Isolator	Static Defn (Ins)	Seismic Restr't	Base	Isolator	Static Defn (Ins)	Seismic Restr't
Housekeeping Pads		-	-	-	-	PA-1				PA-1
Ducts	(1)	-	-	-	-	-	-	E-3	-	SR-3
Fans (floor mounted and internally spring isolated	(2) (3)	500-750 751-1000 1001-1200 Above 1200	-	-	-	-	SB-1 SB-1 SB-1 SB-1	S-1 S-1 S-1 S-1	3.0 2.5 1.5 1.0	SR-1 SR-1 SR-1 SR-1
Piping (Supported)	(4) (5)	Over 2 inch dia uninsulated2 inch dia & less	- -	S-2 C-1	1.0 0.1	SR-2 -	MB-1 -	S-2 C-1	1.0 0.1	SR-2 -
Piping (Suspended)	(4)	Over 2 inch dia 2 inch dia & less	Not Applicable				- -	SH-2 C-1	1.0 0.1	SR-3 -
Unit Heaters		All	-	-	-	-	-	SH-1	1.0	SR-3
Pumps	(6)						IB-1	S-1	1.0	SR-1

Notes:

1. Thrust restraints type TR-1 must be installed on fans developing a total static pressure of 2 inches and above and on fans whose isolator deflections exceeds 2 inches.

2. Piping shall be supported or suspended on steel spring isolators in the mechanical equipment room and for a distance of 40 feet from a pump or spring isolated equipment. In other cases, support or suspension shall have a neoprene of felt pad element between the pipe and its attachment to the structure.
3. Piping connected to pumps shall be connected with pipe FC-1 or FC-2 flexible connectors.
4. Pumps over 5 HP located above grade shall be mounted on inertia bases as indicated.

END OF SECTION

PART 1 GENERAL

1.1 SUMMARY

A. Section Includes:
1. Nameplates.
2. Tags.
3. Stencils.
4. Pipe markers.
5. Labels.
6. Lockout devices.

1.2 REFERENCES

A. American Society of Mechanical Engineers:
1. ASME A13.1 - Scheme for the Identification of Piping Systems.

1.3 SUBMITTALS

A. Product Data: Submit manufacturers catalog literature for each product required.

B. Shop Drawings: Submit list of wording, symbols, letter size, and color coding for mechanical identification and valve chart and schedule, including valve tag number, location, function, and valve manufacturer's name and model number.

1.4 QUALIFICATIONS

A. Manufacturer: Company specializing in manufacturing products specified in this section with minimum three years documented experience.

PART 2 PRODUCTS

2.1 NAMEPLATES

A. Product Description: Laminated three-layer plastic with engraved black or white letters on light contrasting background color. Minimum 1/2 Inch text.

B. Plate minimum size 3/4" x 2-1/2"

2.2 TAGS

A. Plastic Tags:
1. Laminated three-layer plastic with engraved black letters on light contrasting background color. Tag size minimum 1-1/2 inches diameter or square.

B. Metal Tags:
1. Brass with stamped letters; tag size minimum 1-1/2 inches diameter with finished edges.

C. Information Tags:
1. Clear plastic with printed "Danger," "Caution," or "Warning" and message; size 3-1/4 x 5-5/8 inches with grommet and self-locking nylon ties.

D. Tag Chart: Typewritten letter size list of applied tags and location.

2.3 STENCILS

A. Stencils: With clean cut symbols and letters of following size:
1. Up to 2 inches Outside Diameter of Insulation or Pipe: 1/2 inch high letters.
2. 2-1/2 to 6 inches Outside Diameter of Insulation or Pipe: 1-inch high letters.

2.4 PIPE MARKERS

A. Plastic Pipe Markers:
1. Factory fabricated, flexible, semi-rigid plastic, preformed to fit around pipe or pipe covering. Larger sizes may have maximum sheet size with spring fastener.

B. Plastic Tape Pipe Markers:
1. Flexible, vinyl film tape with pressure sensitive adhesive backing and printed markings.

2.5 LABELS

A. Description: Laminated Mylar, size 1.9 x 0.75 inches, adhesive backed with printed identification.

2.6 LOCKOUT DEVICES

A. Lockout Hasps:
1. Reinforced nylon hasp with erasable label surface; size minimum 7-1/4 x 3 inches.

B. Valve Lockout Devices:
1. Nylon device preventing access to valve operator, accepting lock shackle.

PART 3 EXECUTION

3.1 PREPARATION

A. Degrease and clean surfaces to receive adhesive for identification materials.

3.2 INSTALLATION

A. Install identifying devices after completion of coverings and painting.

B. Install plastic nameplates with corrosive-resistant mechanical fasteners, or adhesive.

C. Install labels with sufficient adhesive for permanent adhesion and seal with clear lacquer. For unfinished canvas covering, apply paint primer before applying labels.

D. For pipe markers, provide complete wraps of adhesive direction arrow tape around both ends of marker.

E. Install tags using corrosion resistant chain. Number tags consecutively by location.

F. Identify air handling units, pumps, heat transfer equipment, tanks, and water treatment devices with plastic nameplates. Identify in-line pumps and other small devices with tags.

G. Identify control panels and major control components outside panels with plastic nameplates.

H. Identify valves in main and branch piping with tags showing service and valve number.

I. For valves, indicate on tag whether valve is normally open or normally closed (NO or NC). Number tags consecutively by location.

J. Identify air terminal units and radiator valves with numbered tags.

K. Tag automatic controls, instruments, and relays. Key to control schematic.

L. Identify piping, exposed [and concealed], with plastic pipe markers.
   1. Identify service, flow direction, and pressure.
   2. Install in clear view and align with axis of piping. Viewable from floor or access opening.
   3. Locate identification not to exceed 20 feet on straight runs including risers and drops, adjacent to each valve and tee, at each side of penetration of structure or enclosure, and at each obstruction.

3.3 SCHEDULES

IDENTIFICATION

Common abbreviations are shown; submit proposed abbreviations for other systems as needed.

CW	Cold Water
HW	Hot Water
HWC	Hot Water Circulation
HWS	Heating Water Supply
HWR	Heating Water Return
GHS	Glycol Heating Supply
GHR	Glycol Heating Return
F	Fire Protection Water, or sprinkler piping

END OF SECTION

[This page intentionally left blank.]

PART 1 GENERAL

1.1 SUMMARY

A. Section Includes:
1. HVAC piping insulation, jackets and accessories.
2. HVAC equipment insulation, jackets and accessories.
3. HVAC ductwork insulation, jackets, and accessories.

1.2 REFERENCES

A. ASTM International:
1. ASTM A167 - Standard Specification for Stainless and Heat-Resisting Chromium-Nickel Steel Plate, Sheet, and Strip.
2. ASTM B209 - Standard Specification for Aluminum and Aluminum-Alloy Sheet and Plate.
3. ASTM C195 - Standard Specification for Mineral Fiber Thermal Insulating Cement.
4. ASTM C449/C449M - Standard Specification for Mineral Fiber Hydraulic-Setting Thermal Insulating and Finishing Cement.
5. ASTM C450 - Standard Practice for Prefabrication and Field Fabrication of Thermal Insulating Fitting Covers for NPS Piping, Vessel Lagging, and Dished Head Segments.
6. ASTM C533 - Standard Specification for Calcium Silicate Block and Pipe Thermal Insulation.
7. ASTM C534 - Standard Specification for Preformed Flexible Elastomeric Cellular Thermal Insulation in Sheet and Tubular Form.
8. ASTM C547 - Standard Specification for Mineral Fiber Pipe Insulation.
9. ASTM C553 - Standard Specification for Mineral Fiber Blanket Thermal Insulation for Commercial and Industrial Applications.
10. ASTM C578 - Standard Specification for Rigid, Cellular Polystyrene Thermal Insulation.
11. ASTM C585 - Standard Practice for Inner and Outer Diameters of Rigid Thermal Insulation for Nominal Sizes of Pipe and Tubing (NPS System).
12. ASTM C591 - Standard Specification for Unfaced Preformed Rigid Cellular Polyisocyanurate Thermal Insulation.
13. ASTM C612 - Standard Specification for Mineral Fiber Block and Board Thermal Insulation.
14. ASTM C795 - Standard Specification for Thermal Insulation for Use in Contact with Austenitic Stainless Steel.
15. ASTM C921 - Standard Practice for Determining the Properties of Jacketing Materials for Thermal Insulation.
16. ASTM C1071 - Standard Specification for Thermal and Acoustical Insulation (Glass Fiber, Duct Lining Material).
17. ASTM C1136 - Standard Specification for Flexible, Low Permeance Vapor Retarders for Thermal Insulation.
18. ASTM C1290 - Standard Specification for Flexible Fibrous Glass Blanket Insulation Used to Externally Insulate HVAC Ducts.

19. ASTM D1784 - Standard Specification for Rigid Poly (Vinyl Chloride) (PVC) Compounds and Chlorinated Poly (Vinyl Chloride) (CPVC) Compounds.
20. ASTM D4637 - Standard Specification for EPDM Sheet Used in Single-Ply Roof Membrane.
21. ASTM E84 - Standard Test Method for Surface Burning Characteristics of Building Materials.
22. ASTM E96 - Standard Test Methods for Water Vapor Transmission of Materials.
23. ASTM E162 - Standard Test Method for Surface Flammability of Materials Using a Radiant Heat Energy Source.

B. Sheet Metal and Air Conditioning Contractors':
1. SMACNA - HVAC Duct Construction Standard - Metal and Flexible.

C. National Fire Protection Association:
1. NFPA 255 - Standard Method of Test of Surface Burning Characteristics of Building Materials.

D. Underwriters Laboratories Inc.:
1. UL 723 - Tests for Surface Burning Characteristics of Building Materials.
2. UL 1978 - Standard for Safety for Grease Ducts.

1.3 SUBMITTALS

A. Product Data: Submit product description, thermal characteristics and list of materials and thickness for each service, and location.

1.4 ENVIRONMENTAL REQUIREMENTS

A. Install insulation only when ambient temperature and humidity conditions are within range recommended by manufacturer.

B. Maintain temperature before, during, and after installation for minimum period of 24 hours.

1.5 DELIVERY, STORAGE, AND HANDLING

A. Accept materials on site in original factory packaging, labeled with manufacturer's identification, including product density and thickness.

B. Protect insulation from weather and construction traffic, dirt, water, chemical, and mechanical damage, by storing in original wrapping.

1.6 FIELD MEASUREMENTS

A. Verify field measurements prior to fabrication.

1.7 WARRANTY

A. Furnish five year manufacturer warranty for man-made fiber.

PART 2 PRODUCTS

2.1 PIPE INSULATION

A. TYPE P-1: ASTM C547, molded glass fiber pipe insulation.
1. Thermal Conductivity: 0.23 at 75 degrees F.
2. Operating Temperature Range: 0 to 850 degrees F.
3. Vapor Barrier Jacket: ASTM C1136, Type I, factory applied reinforced foil kraft with self-sealing adhesive joints.
4. Jacket Temperature Limit: minus 20 to 150 degrees F.

2.2 PIPE INSULATION JACKETS

A. Vapor Retarder Jacket:
1. ASTM C921, white Kraft paper with glass fiber yarn, bonded to aluminized film.
2. Moisture vapor transmission: ASTM E96; 0.02 perm-inches.

B. PVC Plastic Pipe Jacket:
1. Product Description: ASTM D1784, One piece molded type fitting covers and sheet material, off-white color.
2. Thickness: 15 mil.
3. Connections: Brush on welding adhesive.

C. ABS Plastic Pipe Jacket:
1. Jacket: One piece molded type fitting covers and sheet material, off-white color.
2. Minimum service temperature: -40 degrees F.
3. Maximum service temperature of 200 degrees F.
4. Moisture vapor transmission: ASTM E96; 0.012 perm-inches.
5. Thickness: 30 mil.
6. Connections: Brush on welding adhesive.

2.3 PIPE INSULATION ACCESSORIES

A. Vapor Retarder Lap Adhesive: Compatible with insulation.

B. Covering Adhesive Mastic: Compatible with insulation.

C. Piping 1-1/2 inches diameter and smaller: Galvanized steel insulation protection shield. MSS SP-69, Type 40. Length: Based on pipe size and insulation thickness.

D. Piping 2 inches diameter and larger: Wood insulation saddle, hard maple. Inserts length: not less than 6 inches long, matching thickness and contour of adjoining insulation.

E. Closed Cell Elastomeric Insulation Pipe Hanger: Polyurethane insert with aluminum single piece construction with self-adhesive closure. Thickness to match pipe insulation.

F. Tie Wire: 0.048 inch stainless steel with twisted ends on maximum 12 inch centers.

G. Mineral Fiber Hydraulic-Setting Thermal Insulating and Finishing Cement: ASTM C449/C449M.

H. Insulating Cement: ASTM C195; hydraulic setting on mineral wool.

I. Adhesives: Compatible with insulation.

2.4 EQUIPMENT INSULATION

A. TYPE E-1: ASTM C612; glass fiber, rigid board, noncombustible with factory applied kraft jacket.
   1. Thermal Conductivity: 0.24 at 75 degrees F.
   2. Operating Temperature Range: 0 to 450 degrees F.
   3. Density: 3.0 pound per cubic foot.
   4. Jacket Temperature Limit: minus 20 to 150 degrees F.

B. TYPE E-2: ASTM C612; semi-rigid, fibrous glass board noncombustible, end grain adhered to jacket.
   1. Thermal Conductivity: 0.27 at 75 degrees F.
   2. Operating Temperature Range: 0 to 650 degrees F.
   3. Vapor Barrier Jacket: ASTM C1136, Type II, factory applied reinforced foil kraft with self-sealing adhesive joints.
   4. Jacket Temperature Limit: minus 20 to 150 degrees F.

2.5 EQUIPMENT INSULATION ACCESSORIES

A. Vapor Retarder Lap Adhesive: Compatible with insulation.

B. Covering Adhesive Mastic: Compatible with insulation.

C. Tie Wire: 0.048 inch stainless steel with twisted ends on maximum 12 inch centers.

D. Mineral Fiber Hydraulic-Setting Thermal Insulating and Finishing Cement: ASTM C449/C449M.

E. Adhesives: Compatible with insulation.

2.6 DUCTWORK INSULATION

A. TYPE D-1: ASTM C1290, Type III, flexible glass fiber, commercial grade with factory applied reinforced aluminum foil jacket meeting ASTM C1136, Type II.
   1. Thermal Conductivity: 0.30 at 75 degrees F.
   2. Maximum Operating Temperature: 250 degrees F.
   3. Density: 1.5 pound per cubic foot.

B. TYPE D-2: ASTM C612, Type IA or IB, rigid glass fiber, with factory applied all service facing meeting ASTM C1136, Type II.
   1. Thermal Conductivity: 0.24 at 75 degrees F.
   2. Density: 3.0 pound per cubic foot.

2.7 DUCTWORK INSULATION ACCESSORIES

A. Vapor Retarder Tape:
1. Kraft paper reinforced with glass fiber yarn and bonded to aluminized film, with pressure sensitive rubber based adhesive.

B. Vapor Retarder Lap Adhesive: Compatible with insulation.

C. Adhesive: Waterproof type.

D. Liner Fasteners: Galvanized steel, welded with integral head.

E. Tie Wire: 0.048 inch stainless steel with twisted ends on maximum 12 inch centers.

F. Impale Anchors: Galvanized steel, 12 gage self-adhesive pad.

G. Adhesives: Compatible with insulation.

H. Membrane Adhesives: As recommended by membrane manufacturer.

PART 3 EXECUTION

3.1 EXAMINATION

A. Verify piping, equipment and ductwork has been tested before applying insulation materials.

B. Verify surfaces are clean and dry, with foreign material removed.

C. Prepare surfaces and install insulation, jacketing, and accessories in accordance with manufacturer’s recommendations, building codes, and industry standards.

3.2 INSTALLATION - PIPING SYSTEMS

A. Piping Exposed to View in Finished Spaces: Locate insulation and cover seams in least visible locations.

B. Continue insulation through penetrations of building assemblies or portions of assemblies having fire resistance rating of one hour or less. Provide intumescent firestopping when continuing insulation through assembly. Finish at supports, protrusions, and interruptions. Refer to Section 07840 for penetrations of assemblies with fire resistance rating greater than one hour.

C. Piping Systems Conveying Fluids Below Ambient Temperature:
1. Insulate entire system including fittings, valves, unions, flanges, strainers, flexible connections, pump bodies, and expansion joints.
Insulation shall be continuous at all hangers, supports, penetrations or clamps.

2. Furnish factory-applied or field-applied vapor retarder jackets. Secure factory-applied jackets with pressure sensitive adhesive self-sealing longitudinal laps and butt strips. Secure field-applied jackets with outward clinch expanding staples and seal staple penetrations with vapor retarder mastic.
3. Vapor barrier shall also be continuous through penetration and through transitions between pipe insulation and inserts.
4. Insulate fittings, joints, and valves with molded insulation of like material and thickness as adjacent pipe. Finish with glass cloth and vapor retarder adhesive or PVC fitting covers.

D. Glass Fiber Board Insulation:
1. Apply insulation close to equipment by grooving, scoring, and beveling insulation. Fasten insulation to equipment with studs, pins, clips, adhesive, wires, or bands.
2. Fill joints, cracks, seams, and depressions with bedding compound to form smooth surface. On cold equipment, use vapor retarder cement.
3. Cover wire mesh or bands with cement to a thickness to remove surface irregularities.

E. Hot Piping Systems less than 140 degrees F:
1. Furnish factory-applied or field-applied standard jackets. Secure with outward clinch expanding staples or pressure sensitive adhesive system on standard factory-applied jacket and butt strips or both.
2. Insulate fittings, joints, and valves with insulation of like material and thickness as adjoining pipe. Finish with glass cloth and adhesive or PVC fitting covers.
3. Do not insulate unions and flanges at equipment, but bevel and seal ends of insulation at such locations.
4. Insulation shall be continuous at all hangers, supports, penetrations or clamps.
5. Vapor barrier shall also be continuous through penetration and through transitions between pipe insulation and inserts.
6. Exception: Branch piping serving finned tube from below shall not require full insulation through the floor pipe penetration. Contractor to install mineral wool or 1/2 inch insulation in interstitial space. The openings shall be sleeved.

F. Hot Piping Systems greater than 140 degrees F:
1. Furnish factory-applied or field-applied standard jackets. Secure with outward clinch expanding staples or pressure sensitive adhesive system on standard factory-applied jacket and butt strips or both.
2. Insulate fittings, joints, and valves with insulation of like material and thickness as adjoining pipe. Finish with glass cloth and adhesive or PVC fitting covers.
3. Insulate flanges and unions at equipment.
4. Insulation shall be continuous at all hangers, supports, penetrations or clamps.
5. Exception: Branch piping serving finned tube from below shall not require full insulation through the floor pipe penetration. Contractor to install mineral wool or 1/2 inch insulation in interstitial space. The openings shall be sleeved.

G. Inserts and Shields:
1. Piping 1-1/2 inches Diameter and Smaller: Install steel shield between pipe hanger and insulation.

2. Piping 2 inches Diameter and Larger: Install insert between support shield and piping and under finish jacket.
   a. Insert Configuration: Minimum 6 inches long, of thickness and contour matching adjoining insulation; may be factory fabricated.
   b. Insert Material: Approved compression resistant insulating material suitable for planned temperature range and service.
      1) Hydrous calcium silicate pipe insulation, rigid molded white; asbestos free.
      2) Polyurethane Core System: 5 pcf density, 72 psi compressive strength. K-Flex 360 or approved equal.
      3) Wood blocks are not acceptable.
   c. Shields: Galvanized steel between pipe hangers or pipe hanger rolls and inserts. Shields shall extend a minimum of 6 inches beyond hanger in both directions.
3. Piping Supported by Roller Type Pipe Hangers: Install steel shield between roller and inserts.

H. Insulation Terminating Points:
1. Coil Branch Piping 1 inch and Smaller: Terminate hot water piping at union upstream of the coil control valve.

I. High Temperature Pipe Insulation:
1. Install in multiple layers to meet thickness scheduled.
2. Attach each layer with bands. Secure first layer with bands before installing next layer.
3. Stagger joints between layers.

3.3 INSTALLATION - EQUIPMENT

A. Factory Insulated Equipment: Do not insulate.

B. Exposed Equipment: Locate insulation and cover seams in least visible locations.

C. Fill joints, cracks, seams, and depressions with bedding compound to form smooth surface. On cold equipment, use vapor retarder cement.

D. Equipment Containing Fluids Below Ambient Temperature:
1. Insulate entire equipment surfaces.
2. Apply insulation close to equipment by grooving, scoring, and beveling insulation. Fasten insulation to equipment with studs, pins, clips, adhesive, wires, or bands.
3. Furnish factory-applied or field-applied vapor retarder jackets. Secure factory-applied jackets with pressure sensitive adhesive self-sealing longitudinal laps and butt strips. Secure field-applied jackets with outward clinch expanding staples and seal staple penetrations with vapor retarder mastic.
4. Finish insulation at supports, protrusions, and interruptions.

E. Equipment Containing Fluids 140 degrees F Or Less:
1. Do not insulate flanges and unions, but bevel and seal ends of insulation.

2. Install insulation with factory-applied or field applied jackets, with or without vapor barrier. Finish with glass cloth and adhesive.
3. Finish insulation at supports, protrusions, and interruptions.

F. Equipment Containing Fluids Over 140 degrees F:
1. Insulate flanges and unions with removable sections and jackets.
2. Install insulation with factory-applied or field applied jackets, with or without vapor barrier. Finish with glass cloth and adhesive.
3. Finish insulation at supports, protrusions, and interruptions.

G. Nameplates and ASME Stamps: Bevel and seal insulation around; do not cover with insulation.

H. Equipment Requiring Access for Maintenance, Repair, or Cleaning: Install insulation for easy removal and replacement without damage.

3.4 INSTALLATION - DUCTWORK SYSTEMS

A. Duct dimensions indicated on Drawings are finished inside dimensions.

B. Outdoor and relief air ductwork:
1. Provide insulation with vapor retarder jackets.
2. Finish with tape and vapor retarder jacket.
3. Continue insulation through walls, sleeves, hangers, and other duct penetrations.
4. Insulate entire system including fittings, joints, flanges, fire dampers, flexible connections, and expansion joints.

C. External Glass Fiber Duct Insulation:
1. Secure insulation with vapor retarder with wires and seal jacket joints with vapor retarder adhesive or tape to match jacket.
2. Secure insulation without vapor retarder with staples, tape, or wires.
3. Install without sag on underside of ductwork. Use adhesive or mechanical fasteners where necessary to prevent sagging. Lift ductwork off trapeze hangers and insert spacers.
4. Seal vapor retarder penetrations by mechanical fasteners with vapor retarder adhesive.
5. Stop and point insulation around access doors and damper operators to allow operation without disturbing wrapping.

3.5 SCHEDULES

A. Heating Services Piping Insulation Schedule:

PIPING SYSTEM	INSULATION TYPE	PIPE SIZE	INSULATION THICKNESS inches
Heating Water Supply and Return	P-1	3 inches and smaller 4 inches and larger	1.0 1.5

B. Equipment Insulation Schedule:

EQUIPMENT	INSULATION TYPE	INSULATION THICKNESS inches
Water-to-Water Heat Exchangers	E-1, E-2	1.5

C. Ductwork Insulation Schedule:

DUCTWORK SYSTEM	INSULATION TYPE	INSULATION THICKNESS inches
Outside Air Intake	D-1, D-2	2
Exhaust Ducts Within 10 feet of Exterior Openings, Thickness indicated is installed thickness.	D-1, D-2	1
Relief Ducts Within 10 feet of Exterior Openings, Thickness indicated is installed thickness.	D-1, D-2	1

END OF SECTION

[This page intentionally left blank]

PART 1 GENERAL

1.1 SUMMARY

A. Section Includes:
1. Gate valves.
2. Globe valves.
3. Ball valves.
4. Butterfly valves.
5. Check valves.

1.2 REFERENCES

A. ASTM International:
1. ASTM A216/A216M - Standard Specification for Steel Castings, Carbon, Suitable for Fusion Welding, for High-Temperature Service.
2. ASTM D1784 - Standard Specification for Rigid Poly (Vinyl Chloride) (PVC) Compounds and Chlorinated Poly (Vinyl Chloride) (CPVC) Compounds.
3. ASTM D4101 - Standard Specification for Propylene Injection and Extrusion Materials.

B. Manufacturers Standardization Society of the Valve and Fittings Industry:
1. MSS SP 67 - Butterfly Valves.
2. MSS SP 70 - Cast Iron Gate Valves, Flanged and Threaded Ends.
3. MSS SP 71 - Cast Iron Swing Check Valves, Flanged and Threaded Ends.
4. MSS SP 78 - Cast Iron Plug Valves, Flanged and Threaded Ends.
5. MSS SP 80 - Bronze Gate, Globe, Angle and Check Valves.
6. MSS SP 85 - Cast Iron Globe & Angle Valves, Flanged and Threaded.
7. MSS SP 110 - Ball Valves Threaded, Socket-Welding, Solder Joint, Grooved and Flared Ends.

C. Underwriters Laboratories Inc.:
1. UL 842 - Valves for Flammable Fluids.

1.3 SUBMITTALS

A. Section 01330 - Submittal Procedures: Requirements for submittals.

B. Product Data: Submit manufacturers catalog information with valve data and ratings for each service.

PART 2 PRODUCTS

2.1 GATE VALVES

A. Class 150, bronze body, bronze trim, bonnet, non-rising stem, inside screw, [solid] [split] wedge disc.

B. 2-1/2 inches and Larger: MSS SP 70, Class 150, cast iron body, bronze trim, bolted bonnet, non-rising stem, hand-wheel, outside screw and yoke, solid wedge disc with bronze seat rings, flanged ends.

2.2 GLOBE VALVES

A. 2 inches and Smaller: MSS SP 80, Class 150, bronze body, bronze trim, bonnet, hand wheel, Buna-N or teflon composition disc.

B. 2-1/2 inches and Larger: MSS SP 85, Class 150, cast iron body, bronze trim, bolted bonnet, hand wheel, outside screw and yoke, flanged ends.

2.3 BALL VALVES

A. 2 inches and Smaller: MSS SP 110, Class 150, bronze, two piece body, type 316 stainless steel ball, full port, teflon seats, blow-out proof stem, lever handle with balancing stops.

2.4 BUTTERFLY VALVES

A. 2-1/2 inches and Larger: MSS SP 67, Class 150.
1. Body: Cast or ductile iron, wafer, lug or grooved ends, stainless steel stem, extended neck.
2. Disc: Nickel-plated ductile iron.
3. Seat: Resilient replaceable.
4. Handle and Operator: 10 position lever handle.

B. 2 inches and Smaller: MSS SP 67, 175 psi, bronze body, Viton seals, stainless steel trim, lever handle UL 842 listed for gas service, full port.

2.5 CHECK VALVES

A. Horizontal Swing Check Valves:
1. 2 inches and Smaller: MSS SP 80, Class 150, bronze body and cap, bronze seat, Buna-N or teflon disc.
2. 2-1/2 inches and Larger: MSS SP 71, Class 250, cast iron body, bolted cap, bronze or cast iron disc, flanged ends.

B. Spring Loaded Check Valves:
1. 2 inches and Smaller: MSS SP 80, Class 250, bronze body, in-line spring lift check, silent closing, Buna-N or teflon disc, integral seat.
2. 2-1/2 inches and Larger:MSS SP 71, Class 150, globe style, cast iron body, bronze seat, center guided bronze disc, stainless steel spring and screws, flanged ends.

PART 3 EXECUTION

3.1 EXAMINATION

A. Section 01300 - Administrative Requirements: Verification of existing conditions before starting work.

B. Verify piping system is ready for valve installation.

3.2 INSTALLATION

A. Install valves with stems upright or horizontal, not inverted.

B. Install brass male adapters each side of valves in copper piped system. Solder adapters to pipe.

C. Install 3/4 inch ball valves with cap for drains at main shut-off valves, low points of piping, bases of vertical risers, and at equipment.

D. Install valves with clearance for installation of insulation and allowing access.

E. Provide access where valves and fittings are not accessible.

3.3 VALVE APPLICATIONS

A. Install valves for shut-off and to isolate equipment, part of systems, or vertical risers.

B. Install valves for throttling, bypass, or manual flow control services.

C. Install spring loaded check valves on discharge of water pumps.

D. Install lug end butterfly valves adjacent to equipment when functioning to isolate equipment.

END OF SECTION

[This page intentionally left blank.]

PART 1 GENERAL

1.1 SUMMARY

A. Section Includes:
1. Pressure gages.
2. Pressure gage taps.
3. Thermometers.
4. Termometer supports.
5. Test plugs.
6. Flexible connectors.
7. Expansion tanks.
8. Air vents.
9. Air separators.
10. Strainers.
11. Flow controls.
12. Relief valves.
13. Glycol charging equipment.
14. Glycol solution.

1.2 REFERENCES

A. American Society of Mechanical Engineers:
1. ASME B40.1 - Gauges - Pressure Indicating Dial Type - Elastic Element.
2. ASME Section VIII - Boiler and Pressure Vessel Code - Pressure Vessels.

B. ASTM International:
1. ASTM E1 - Standard Specification for ASTM Thermometers.
2. ASTM E77 - Standard Test Method for Inspection and Verification of Thermometers.

C. American Water Works Association:
1. AWWA C700 - Cold-Water Meters - Displacement Type, Bronze Main Case.
2. AWWA C701 - Cold-Water Meters - Turbine Type, for Customer Service.
3. AWWA C702 - Cold-Water Meters - Compound Type.
4. AWWA C706 - Direct-Reading, Remote-Registration Systems for Cold-Water Meters.
5. AWWA M6 - Water Meters - Selection, Installation, Testing, and Maintenance.

D. Underwriters Laboratories Inc.:
1. UL 393 - Indicating Pressure Gauges for Fire-Protection Service.
2. UL 404 - Gauges, Indicating Pressure, for Compressed Gas Service.

1.3 SUBMITTALS

A. Product Data: Submit for manufactured products and assemblies used in this Project.
1. Submit product description, model, dimensions, component sizes, rough-in requirements, service sizes, and finishes.
2. Submit schedule indicating manufacturer, model number, size, location, rated capacity, load served, and features for each piping specialty.

3. Submit electrical characteristics and connection requirements.

B. Manufacturer's Installation Instructions: Submit hanging and support methods, joining procedures, application, selection, and hookup configuration. Include pipe and accessory elevations.

1.4 CLOSEOUT SUBMITTALS

A. Operation and Maintenance Data: Submit instructions for calibrating instruments, maintenance schedule instructions, assembly views, servicing requirements, lubrication instruction, and replacement parts list.

B. Submit results of glycol strength tests.

1.5 ENVIRONMENTAL REQUIREMENTS

A. Do not install instruments when areas are under construction, except rough in, taps, supports and test plugs.

PART 2 PRODUCTS

2.1 PRESSURE GAGES

A. Gage: ASME B40.1, with bourdon tube, rotary brass movement, brass socket, front calibration adjustment, black scale on white background.
1. Case: Steel or Cast aluminum.
2. Bourdon Tube: Brass.
3. Dial Size: 3-1/2 inch diameter.
4. Mid-Scale Accuracy: One percent.
5. Scale: Psi.

2.2 PRESSURE GAGE TAPS

A. Needle Valve: 1/4 inch NPT for minimum 300 psi.

B. Ball Valve: 1/4 inch NPT for 250 psi.

C. Pulsation Damper: Pressure snubber, brass with 1/4 inch NPT connections.

D. Siphon: 1/4 inch NPT angle or straight pattern.

2.3 STEM TYPE THERMOMETERS

A. Thermometer: ASTM E1, adjustable angle, red appearing mercury, lens front tube, cast aluminum case with enamel finish, cast aluminum adjustable joint with positive locking device.
1. Size: minimum 7 inch scale.
2. Window: Clear Lexan.
3. Stem: Brass, 3/4 inch NPT, 3-1/2 inch long.

4. Accuracy: ASTM E77 2 percent.
5. Calibration: Degrees F.

2.4 THERMOMETER SUPPORTS

A. Socket: Brass separable sockets for thermometer stems with or without extensions.

B. Flange: 3 inch outside diameter reversible flange, designed to fasten to sheet metal air ducts, with brass perforated stem.

2.5 TEST PLUGS

A. 1/4 inch NPT or 1/2 inch NPT brass fitting and cap for receiving 1/8 inch outside diameter pressure or temperature probe with:
1. Neoprene core for temperatures up to 200 degrees F.
2. Nordel core for temperatures up to 350 degrees F.
3. Viton core for temperatures up to 400 degrees F.

2.6 FLEXIBLE CONNECTORS

A. Corrugated stainless steel hose with single layer of exterior braiding, minimum 9 inches long with copper tube ends; for maximum working pressure 350 psig.

2.7 EXPANSION TANKS

A. Construction: Welded steel, tested and stamped in accordance with ASME Section VIII; supplied with National Board Form U-1, rated for working pressure of 125 psig, with flexible diaphragm sealed into tank.

B. Accessories: Pressure gage and air-charging fitting, tank drain; pre-charge to 12 psig.

C. Automatic Cold Water Fill Assembly: Pressure reducing valve, double check back flow prevention device, test cocks, strainer, vacuum breaker, and by-pass valves.

2.8 AIR VENTS

A. Manual Type: Short vertical sections of 2 inch diameter pipe to form air chamber, with 1/8 inch brass needle valve at top of chamber.

B. Float Type:
1. Brass or semi-steel body, copper, polypropylene, or solid non-metallic float, stainless steel valve and valve seat; suitable for system operating temperature and pressure; with isolating valve.

C. Washer Type:
1. Brass with hydroscopic fiber discs, vent ports, adjustable cap for manual shut-off, and integral spring loaded ball check valve.

2.9 AIR SEPARATORS

A. Dip Tube Fitting: For 125 psig operating pressure; to prevent free air collected in boiler from rising into system.

B. In-line Air Separators: Cast iron for sizes 1-1/2 inch and smaller, or steel for sizes 2 inch and larger; tested and stamped in accordance with ASME Section VIII; for 125 psig operating pressure.

C. Combination Air Separators/Strainers: Steel, tested and stamped in accordance with ASME Section VIII; for 125 psig operating pressure, with integral strainer, tangential inlet and outlet connections, and internal stainless steel air collector tube.

2.10 STRAINERS

A. Size 2 inch and Smaller:
1. Screwed brass or iron body for 175 psig working pressure, Y pattern with 1/32 inch stainless steel perforated screen.

B. Size 2-1/2 inch to 4 inch:
1. Flanged iron body for 175 psig working pressure, Y pattern with 3/64 inch stainless steel perforated screen.

C. Size 5 inch and Larger:
1. Flanged iron body for 175 psig working pressure, basket pattern with 1/8 inch stainless steel perforated screen.

2.11 PUMP SUCTION FITTINGS

A. Fitting: Angle pattern, cast-iron body. Threaded for 2 inch and smaller, flanged for 2-1/2 inch and larger. Rated for 175 psig working pressure, with inlet vanes, cylinder strainer with 3/16 inch diameter openings, disposable fine mesh strainer to fit over cylinder strainer, and permanent magnet located in flow stream and removable for cleaning.

B. Accessories: Adjustable foot support, blow-down tapping in bottom, gage tapping in side.

2.12 FLOW CONTROLS

A. Construction: Brass or bronze body with union on inlet and outlet, temperature and pressure test plug on inlet and outlet, combination blow-down and back-flush drain.

B. Calibration: Control within 5 percent of design flow over entire operating pressure.

C. Control Mechanism: Stainless steel or nickel plated brass piston or regulator cup, operating against stainless steel helical or wave formed spring.

D. Accessories: In-line strainer on inlet and ball valve on outlet.

2.13 RELIEF VALVES

A. Bronze body, Teflon seat, stainless steel stem and springs, automatic, direct pressure actuated capacities ASME certified and labeled.

2.14 GLYCOL CHARGING

A. Tank: 55 gallon tank with fittings suitable for filling with automatic pump for charging.

B. Diaphragm pump, automatic on-off controls, fuse protection, low level cut out float switch, manual diverter valve, pressure switch, LED power indicator light.

C. Auxiliary dry contacts for low pressure alarm.

2.15 GLYCOL SOLUTION

A. Inhibited propylene glycol and water solution mixed 50 percent glycol - 50 percent water, suitable for operating temperatures from -20 degrees F to 250 degrees F.

PART 3 EXECUTION

3.1 GENERAL

A. Install all specialties in accordance with manufacturer’s installation recommendations.

3.2 INSTALLATION - THERMOMETERS AND GAGES

A. Install gage taps in piping

B. Install pressure gages with pulsation dampers. Provide needle valve or ball valve to isolate each gage.

C. Install thermometers in piping systems in sockets in short couplings. Enlarge pipes smaller than 2-1/2 inches for installation of thermometer sockets. Allow clearance from insulation.

D. Install thermometer sockets adjacent to controls systems thermostat, transmitter, or sensor sockets.

E. Coil and conceal excess capillary on remote element instruments.

F. Install static pressure gages to measure across fluid filters and filter banks, (inlet to outlet). On multiple banks, provide manifold and single gage.

G. Provide instruments with scale ranges selected according to service with largest appropriate scale.

H. Install gages and thermometers in locations where they are easily read from normal operating level. Install vertical to 45 degrees off vertical.

I. Adjust gages and thermometers to final angle, clean windows and lenses, and calibrate to zero.

3.3 INSTALLATION - HYDRONIC PIPING SPECIALTIES

A. Locate test plugs adjacent to thermometers and thermometer sockets, adjacent to pressure gages and pressure gage taps.

B. Where large air quantities accumulate, provide enlarged air collection standpipes.

C. Provide isolation valves on all air vents.

D. Install manual air vents at system high points.

E. For automatic air vents in ceiling spaces or other concealed locations, install vent tubing to nearest drain.

F. Provide drain and hose connection with valve on strainer blow down connection.

G. Select system relief valve capacity greater than make-up pressure reducing valve capacity. Select equipment relief valve capacity to exceed rating of connected equipment.

H. Pipe water system relief valve outlets within mechanical spaces to nearest floor drain or within 6 inches of the floor if routing will create tripping hazard. Route glycol system discharges to glycol storage tank.
1. Where a floor drain is not available, provide a 2 inch deep water-tight pan at the discharge point. Locate in an accessible and easily viewable location.

I. Where one line vents several relief valves, make cross sectional area equal to sum of individual vent areas.

J. Feed glycol solution to system through make-up line with pressure regulator, venting system high points. Set to fill at 12 psig.

3.4 INSTALLATION HYDRONIC SPECIALTY EQUIPMENT

A. Support tanks from building structure. Provide seismic restraint.

3.5 FIELD QUALITY CONTROL

A. Test for strength of glycol and water solution and submit written test results.

3.6 CLEANING

A. Clean and flush glycol system before adding glycol solution.

3.7 PROTECTION OF INSTALLED CONSTRUCTION

A. Do not install hydronic pressure gauges until after systems are pressure tested.

END OF SECTION

PART 1 GENERAL

1.1 SUMMARY

A. Section Includes:
1. In-line circulators.

1.2 REFERENCES

A. National Electrical Manufacturers Association:
1. NEMA 250 - Enclosures for Electrical Equipment (1000 Volts Maximum).

B. Underwriters Laboratories Inc.:
1. UL 778 - Motor Operated Water Pumps.

1.3 PERFORMANCE REQUIREMENTS

A. Provide pumps to operate at system fluid temperatures indicated on Drawings without vapor binding and cavitation, are non-overloading in parallel or individual operation, and operate within 25 percent of midpoint of published maximum efficiency curve.

1.4 SUBMITTALS

A. Product Data: Submit certified pump curves showing performance characteristics with pump and system operating point plotted. Include NPSH curve when applicable. Include electrical characteristics and connection requirements. Submit also, manufacturer model number, dimensions, service sizes, and finishes.

B. Manufacturer's Installation Instructions: Submit application, selection, and hookup configuration with pipe and accessory elevations. Submit hanging and support requirements and recommendations.

1.5 FIELD MEASUREMENTS

A. Verify field measurements prior to fabrication.

PART 2 PRODUCTS

2.1 IN-LINE CIRCULATORS

A. Type: Horizontal shaft, single stage, direct connected, with resiliently mounted motor for in-line mounting, oil lubricated, for 125 psig maximum working pressure.

B. Casing: Cast iron, with flanged pump connections.

C. Impeller: keyed to shaft.

D. Bearings: Two, oil lubricated bronze sleeves.

E. Shaft: Alloy or stainless steel with copper or bronze sleeve, integral thrust collar.

F. Seal: Carbon rotating against stationary ceramic seat, 225 degrees F maximum continuous operating temperature.

PART 3 EXECUTION

3.1 INSTALLATION

A. Install pumps in accordance with manufacturer's instructions.

B. Provide maintenance access around pump and pump motor service. Provide at least the maintenance clearances as recommended by manufacturer.

C. Provide pumps to operate at specified system fluid temperatures without vapor binding and cavitation, are non-overloading in parallel or individual operation, and operate within 25 percent of midpoint of published maximum efficiency curve.

D. Install long radius reducing elbows or reducers between pump and piping. Support piping adjacent to pump so no weight is carried on pump casings. For close coupled or base mounted pumps, install supports under elbows on pump suction and discharge line sizes 4 inches and over.

E. Install pumps on vibration isolators.

F. Install flexible connectors at or near pumps where piping configuration does not absorb vibration.

G. Lubricate pumps before start-up.

3.2 FIELD QUALITY CONTROL

A. Check for pump damage and verify that the pump shaft turns freely.

B. Ensure that coupling guards are installed and meet OSHA requirements.

C. Inspect electrical connections and verify that motor is wired for the correct rotation direction.

D. Insulation, if required, is completely installed.

E. Testing and Balancing performed and recorded.

END OF SECTION

PART 1 GENERAL

1.1 SUMMARY

A. Section Includes:
1. Heating water piping, above ground.
2. Glycol piping, above ground.
3. Equipment drains and over flows.
4. Unions and flanges.

1.2 REFERENCES

A. American Society of Mechanical Engineers:
1. ASME B16.3 - Malleable Iron Threaded Fittings.
2. ASME B16.4 - Gray Iron Threaded Fittings.
3. ASME B16.18 - Cast Copper Alloy Solder Joint Pressure Fittings.
4. ASME B16.22 - Wrought Copper and Copper Alloy Solder Joint Pressure Fittings.
5. ASME B31.1 - Power Piping.
6. ASME B31.9 - Building Services Piping.
7. ASME Section IX - Boiler and Pressure Vessel Code - Welding and Brazing Qualifications.

B. ASTM International:
1. ASTM A53/A53M - Standard Specification for Pipe, Steel, Black and Hot-Dipped, Zinc-Coated, Welded and Seamless.
2. ASTM A234/A234M - Standard Specification for Piping Fittings of Wrought Carbon Steel and Alloy Steel for Moderate and High Temperature Service.
3. ASTM A395/A395M - Standard Specification for Ferritic Ductile Iron Pressure-Retaining Castings for Use at Elevated Temperatures.
4. ASTM A536 - Standard Specification for Ductile Iron Castings.
5. ASTM B32 - Standard Specification for Solder Metal.
6. ASTM B88 - Standard Specification for Seamless Copper Water Tube.
7. ASTM B584 - Standard Specification for Copper Alloy Sand Castings for General Applications.
8. ASTM D1784 - Standard Specification for Rigid Poly (Vinyl Chloride) (PVC) Compounds and Chlorinated Poly (Vinyl Chloride) (CPVC) Compounds.
9. ASTM D1785 - Standard Specification for Poly (Vinyl Chloride) (PVC) Plastic Pipe, Schedules 40, 80, and 120.
10. ASTM D2235 - Standard Specification for Solvent Cement for Acrylonitrile-Butadiene-Styrene (ABS) Plastic Pipe and Fittings.
11. ASTM D2241 - Standard Specification for Poly (Vinyl Chloride) (PVC) Pressure-Rated Pipe (SDR Series).
12. ASTM D2310 - Standard Classification for Machine-Made "Fiberglass" (Glass-Fiber-Reinforced Thermosetting-Resin) Pipe.
13. ASTM D2464 - Standard Specification for Threaded Poly (Vinyl Chloride) (PVC) Plastic Pipe Fittings, Schedule 80.
14. ASTM D2466 - Standard Specification for Poly (Vinyl Chloride) (PVC) Plastic Pipe Fittings, Schedule 40.

15. ASTM D2467 - Standard Specification for Poly (Vinyl Chloride) (PVC) Plastic Pipe Fittings, Schedule 80.
16. ASTM D2564 - Standard Specification for Solvent Cements for Poly (Vinyl Chloride) (PVC) Plastic Piping Systems.
17. ASTM D2661 - Standard Specification for Acrylonitrile-Butadiene-Styrene (ABS) Schedule 40 Plastic Drain, Waste, and Vent Pipe and Fittings.
18. ASTM D2680 - Standard Specification for Acrylonitrile-Butadiene-Styrene (ABS) and Poly (Vinyl Chloride) (PVC) Composite Sewer Piping.
19. ASTM D 2683 - Standard Specifi cation for Socket-Type Polyethylene Fittings for Outside Diameter-Controlled Polyethylene Pipe and Fittings.
20. ASTM D2751 - Standard Specification for Acrylonitrile-Butadiene-Styrene (ABS) Sewer Pipe and Fittings.
21. ASTM D2846/D2846M - Standard Specification for Chlorinated Poly(Vinyl Chloride) (CPVC) Plastic Hot- and Cold-Water Distribution Systems.
22. ASTM D2855 - Standard Practice for Making Solvent-Cemented Joints with Poly (Vinyl Chloride) (PVC) Pipe and Fittings.
23. ASTM D3035-06 Standard Specification for Polyethylene (PE) Plastic Pipe (DR-PR) Based on Controlled Outside Diameter
24. ASTM D 3261 - Standard Specifi cation for Butt Heat Fusion Polyethylene (PE) Plastic Fittings for Polyethylene Plastic Pipe and Tubing.
25. ASTM D3309 - Standard Specification for Polybutylene (PB) Plastic Hot- and Cold-Water Distribution Systems.
26. ASTM D3350-06 - Standard Specification for Polyethylene Plastics Pipe and Fittings Materials
27. ASTM F437 - Standard Specification for Threaded Chlorinated Poly (Vinyl Chloride) (CPVC) Plastic Pipe Fittings, Schedule 80.
28. ASTM F439 - Standard Specification for Socket-Type Chlorinated Poly (Vinyl Chloride) (CPVC) Plastic Pipe Fittings, Schedule 80.
29. ASTM F441/F441M - Standard Specification for Chlorinated Poly (Vinyl Chloride) (CPVC) Plastic Pipe, Schedules 40 and 80.
30. ASTM F493 - Standard Specification for Solvent Cements for Chlorinated Poly (Vinyl Chloride) (CPVC) Plastic Pipe and Fittings.
31. ASTM F714-06a Standard Specification for Polyethylene (PE) Plastic Pipe (SDR-PR) Based on Outside Diameter
32. ASTM F845 - Standard Specification for Plastic Insert Fittings for Polybutylene (PB) Tubing.
33. ASTM F876 - Standard Specification for Crosslinked Polyethylene (PEX) Tubing.
34. ASTM F877 - Standard Specification for Crosslinked Polyethylene (PEX) Plastic Hot-and Cold-Water Distribution Systems.
35. ASTM F 1055 - Electrofusion Type Polyethylene Fittings for Outside Diameter Controlled Polyethylene Pipe and Tubing.
36. ASTM F1476 - Standard Specification for Performance of Gasketed Mechanical Couplings for Use in Piping Applications.

C. American Welding Society:
1. AWS A5.8 - Specification for Filler Metals for Brazing and Braze Welding.
2. AWS D1.1 - Structural Welding Code - Steel.

D. American Water Works Association:
   1. AWWA C105 - American National Standard for Polyethylene Encasement for Ductile-Iron Pipe Systems.
   2. AWWA C110 - American National Standard for Ductile-Iron and Grey-Iron Fittings, 3 in. through 48 in. (75 mm through 1200 mm), for Water and Other Liquids.
   3. AWWA C111 - American National Standard for Rubber-Gasket Joints for Ductile-Iron Pressure Pipe and Fittings.
   4. AWWA C151 - American National Standard for Ductile-Iron Pipe, Centrifugally Cast, for Water.

E. Manufacturers Standardization Society of the Valve and Fittings Industry:
   1. MSS SP 67 - Butterfly Valves.
   2. MSS SP 70 - Cast Iron Gate Valves, Flanged and Threaded Ends.
   3. MSS SP 71 - Cast Iron Swing Check Valves, Flanged and Threaded Ends.
   4. MSS SP 78 - Cast Iron Plug Valves, Flanged and Threaded Ends.
   5. MSS SP 80 - Bronze Gate, Globe, Angle and Check Valves.
   6. MSS SP 85 - Cast Iron Globe & Angle Valves, Flanged and Threaded.
   7. MSS SP 110 - Ball Valves Threaded, Socket-Welding, Solder Joint, Grooved and Flared Ends.

1.3 SYSTEM DESCRIPTION

A. Where more than one piping system material is specified, provide compatible system components and joints. Use non-conducting dielectric connections whenever jointing dissimilar metals.

B. Provide flanges, union, and couplings at locations requiring servicing. Use unions, flanges, and couplings downstream of valves and at equipment or apparatus connections.

1.4 SUBMITTALS

A. Shop Drawings: Indicate schematic layout of piping system, including equipment, critical dimensions, and sizes.

B. Product Data:
   1. Piping: Submit data on pipe materials, fittings, and accessories. Submit manufacturers catalog information.

C. Test Reports: Indicate results of piping system pressure test.

D. Manufacturer's Installation Instructions: Submit hanging and support methods, joining procedures and isolation.

E. Welders’ Certificate: Include welders’ certification of compliance with ASME Section IX.

1.5 FIELD MEASUREMENTS

A. Verify field measurements prior to fabrication.

PART 2 PRODUCTS

2.1 HEATING WATER AND GLYCOL PIPING, ABOVE GROUND

A. Steel Pipe: ASTM A53/A53M, Schedule 40, black.
1. Fittings: ASME B16.3, malleable iron or ASTM A234/A234M, forged steel welding type.
2. Joints: Threaded for pipe 2 inch and smaller; welded for pipe 2-1/2 inches and larger.

B. Copper Tubing: ASTM B88, Type K hard drawn.
1. Fittings: ASME B16.18, cast brass, or ASME B16.22 solder wrought copper.
2. Joints: Solder, lead free, ASTM B32, 95-5 tin-antimony, or tin and silver, with melting range 430 to 535 degrees F.

2.2 EQUIPMENT DRAINS AND OVERFLOWS

A. Steel Pipe: ASTM A53/A53M Schedule 40, galvanized.
1. Fittings: ASME B16.3, malleable iron or ASME B16.4, cast iron.
2. Joints: Threaded for pipe 2 inch and smaller; flanged for pipe 2-1/2 inches and larger.

B. Copper Tubing: ASTM B88, Type K hard drawn.
1. Fittings: ASME B16.18, cast brass, or ASME B16.22 solder wrought copper.
2. Joints: Solder, lead free, ASTM B32, 95-5 tin-antimony, or tin and silver, with melting range 430 to 535 degrees F.

PART 3 EXECUTION

3.1 PREPARATION

A. Ream pipe and tube ends. Remove burrs.

B. Remove scale and dirt on inside and outside before assembly.

C. Prepare piping connections to equipment with flanges or unions.

D. Keep open ends of pipe free from scale and dirt. Protect open ends with temporary plugs or caps.

E. After completion, fill, clean, and treat systems as specified.

3.2 INSTALLATION - ABOVE GROUND PIPING SYSTEMS

A. Route piping parallel to building structure and maintain gradient, unless otherwise indicated on drawings or as specified.

B. Install piping to conserve building space, and not interfere with use of space.

C. Group piping wherever practical at common elevations.

D. Sleeve pipe passing through partitions, walls and floors.

E. Install firestopping at fire rated construction perimeters and openings containing penetrating sleeves and piping.

F. Install pipe identification as specified.

G. Install piping to allow for expansion and contraction without stressing pipe, joints, or connected equipment.

H. Slope hydronic piping and arrange systems to drain at low points. Use eccentric reducers to maintain top of pipe aligned.

I. Where pipe support members are welded to structural building framing, scrape, brush clean, and apply one coat of zinc rich primer to welds.

J. Prepare unfinished pipe, fittings, supports, and accessories, ready for finish painting.

K. Insulate piping; as specified.

3.3 FIELD QUALITY CONTROL

A. Inspect piping and piping accessories prior to pressure testing.

B. Inspect piping and piping accessories prior to installing insulation.

C. Test heating water piping system and glycol piping system in accordance with ASME B31.9.

D. Inspect piping and piping accessories after testing.

END OF SECTION

[This page intentionally left blank.]

PART 1 GENERAL

1.1 SUMMARY

A. Section includes plate type heat exchangers and accessories and trim.

1.2 REFERENCES

A. American Society of Mechanical Engineers:
   1. ASME Section VIII - Boiler and Pressure Vessel Code - Pressure Vessels.

1.3 SUBMITTALS

A. Shop Drawings: Indicate dimensions, locations, size of taps, and support frame. Submit engineered design for any equipment stands used to support heat exchanger.

B. Product Data: Submit performance data.

C. Manufacturer’s installation instructions.

1.4 DELIVERY, STORAGE, AND HANDLING

A. Accept heat exchangers on site in factory protective packaging. Inspect for damage.

B. Protect openings with temporary caps to prevent entry of foreign material.

PART 2 PRODUCTS

2.1 PLATE TYPE HEAT EXCHANGERS

A. Cover Plates: Stainless Steel ASTM 316L

B. Cover Plates: Stainless Steel ASTM 316L

C. Brazing Material: Copper

D. Construction: UL and ASME, minimum 250 psig operating pressure, 220 degree F

PART 3 EXECUTION

3.1 INSTALLATION

A. Install equipment in accordance with manufacturer’s recommended instructions and code.

B. Seismically support heat exchanger to structure.

C. Install with clearance to permit removal of heat exchanger with minimum disturbance to installed equipment and piping.

D. Make connections to heat exchangers with unions or flanges.

E. Install valves and piping specialties in accordance with details as indicated on Drawings.

END OF SECTION

PART 1 GENERAL

1.1 REFERENCES

A. American Bearing Manufacturers Association:
   1. ABMA 9 - Load Ratings and Fatigue Life for Ball Bearings.
   2. ABMA 11 - Load Ratings and Fatigue Life for Roller Bearings.

B. Air Movement and Control Association International, Inc.:
   1. AMCA 99 - Standards Handbook.
   2. AMCA 210 - Laboratory Methods of Testing Fans for Aerodynamic Performance Rating.
   3. AMCA 300 - Reverberant Room Method for Sound Testing of Fans.
   4. AMCA 301 - Methods for Calculating Fan Sound Ratings from Laboratory Test Data.
   5. AMCA 500 - Test Methods for Louvers, Dampers, and Shutters.

C. Air-Conditioning and Refrigeration Institute:
   1. ARI 410 - Forced-Circulation Air-Cooling and Air-Heating Coils.
   2. ARI 430 - Central-Station Air-Handling Units.
   3. ARI 610 - Central System Humidifiers for Residential Applications.
   4. ARI Guideline D - Application and Installation of Central Station Air-Handling Units.

D. National Electrical Manufacturers Association:
   1. NEMA MG 1 - Motors and Generators.

E. Sheet Metal and Air Conditioning Contractors:
   1. SMACNA - HVAC Duct Construction Standard - Metal and Flexible.

F. Underwriters Laboratories Inc.:
   1. UL 900 - Air Filter Units.
   2. UL - Fire Resistance Directory.

1.2 SUBMITTALS

A. Shop Drawings: Indicate assembly, unit dimensions, weight loading, required clearances, construction details, field connection details, and electrical characteristics and connection requirements.

B. Product Data, Submit the following:
   1. Published Literature: Indicate capacities, ratings, gages and finishes of materials, and electrical characteristics and connection requirements.
   2. Filters: Data for filter media, filter performance data, filter assembly, and filter frames.
   3. Fans: Performance and fan curves with specified operating point plotted, power, RPM.
   4. Sound Power Level Data: Fan outlet and casing radiation at rated capacity.
   5. Dampers: Include leakage, pressure drop, and sample calibration curves. Indicate materials, construction, dimensions, and installation details.

6. Electrical Requirements: Power supply wiring including wiring diagrams for interlock and control wiring. Indicate factory installed and field installed wiring.

C. Manufacturer's Installation Instructions: Submit.

1.3 DELIVERY, STORAGE, AND HANDLING

A. Accept units and components on site in factory protective containers, with factory shipping skids and lifting lugs. Inspect for damage.

B. Protect units from weather and construction traffic by storing in dry, roofed location.

PART 2 PRODUCTS

2.1 UNIT CONSTRUCTION

A. Fabricate unit with heavy gauge channel posts and panels secured with mechanical fasteners. All panels, access doors, and ship sections shall be sealed with permanently applied bulb-type gasket. Shipped loose gasketing is not allowed.

B. Panels and access doors shall be constructed as a 2-inch nominal thick; thermal broke double wall assembly, injected with foam insulation with an R-value of not less than R-13.
1. The inner liner shall be constructed of G90 galvanized steel.
2. The outer panel shall be constructed of G90 galvanized steel.
3. The floor plate shall be constructed as specified for the inner liner.
4. Unit will be furnished with solid inner liners.

C. Panel deflection shall not exceed L/240 ratio at 125% of design static pressure, maximum 5 inches of positive or 6 inches of negative static pressure. Deflection shall be measured at the panel midpoint.

D. The casing leakage rate shall not exceed .5 cfm per square foot of cabinet area at 5 inches of positive static pressure or 6 inches of negative static pressure.

E. Module to module field assembly shall be accomplished with an overlapping, full perimeter internal splice joint that is sealed with bulb type gasketing on both mating modules to minimize on-site labor and meet indoor air quality standards.

F. Access doors shall be flush mounted to cabinetry, with minimum of two six inch long stainless steel piano-type hinges, latch and full size handle assembly. Access doors shall swing outward for unit sections under negative pressure. Access doors on positive pressure sections, shall have a secondary latch to relieve pressure and prevent injury upon access.

G. A 4-inch formed G60 galvanized steel base rail shall be provided by the unit manufacturer for structural rigidity and condensate trapping.. The base rail shall be constructed with 12-gauge.

2.2 FAN ASSEMBLIES

A. Acceptable fan assembly shall be a double width, double inlet, class II, belt-drive type housed forward curved fan dynamically balanced as an assembly, as shown in schedule. Maximum fan RPM shall be below first critical fan speed. Fan assemblies shall be dynamically balanced by the manufacturer on all three planes and at all bearing supports. Copper lubrication lines shall be provided and extend from the bearings and attached with grease fittings to the fan base assembly near access door. If not supplied at the factory, contractor shall mount copper lube lines in the field. Fan and motor shall be mounted internally on a steel base. Provide access to motor, drive, and bearings through hinged access door.

B. Fan and motor shall be mounted internally on a steel base. Factory mount motor on slide base that can be slid out the side of the unit if removal is required. Provide access to motor, drive, and bearings through hinged access door. Fan and motor assembly shall be mounted on rubber-in-shear vibration type isolators inside cabinetry.

2.3 BEARINGS, SHAFTS, AND DRIVES

A. Bearings: Basic load rating computed in accordance with AFBMA - ANSI Standards.

B. Shafts shall be solid, hot rolled steel, ground and polished, keyed to shaft, and protectively coated with lubricating oil. Hollow shafts are not acceptable.

C. V-Belt drives shall be cast iron or steel sheaves, dynamically balanced, bored to fit shafts and keyed. Fixed sheaves, matched belts, and drive rated based on motor horsepower. Minimum of 2 belts shall be provided on all fans with 10 HP motors and above. Standard drive service factor minimum shall be 1.1 S.F. for 1/4 HP – 7.5 HP, 1.3 S.F. for 10 HP and larger, calculated based on fan brake horsepower.

2.4 ELECTRICAL

A. Fan motors shall be manufacturer provided and installed, Open Drip Proof, premium efficiency (meets or exceeds EPAct requirements), 1750 RPM, single speed. Complete electrical characteristics for each fan motor shall be as shown in schedule.

B. Wiring Termination: Provide terminal lugs to match branch circuit conductor quantities, sizes, and materials indicated. Enclosed terminal lugs in terminal box sized to NFPA 70.

C. All electrical connection components shall be field provided and mounted as shown on project schedule.

2.5 COOLING AND HEATING COILS

A. Certification: Acceptable water cooling, water heating, steam, and refrigerant coils shall be certified in accordance with AHRI Standard 410 and bear the AHRI label.

Coils exceeding the scope of the manufacturer's certification and/or the range of AHRI's standard rating conditions will be considered provided the manufacturer is a current member of the AHRI Forced Circulation Air-Cooling and Air-Heating Coils certification programs and that the coils have been rated in accordance with AHRI Standard 410. Manufacturer must be ISO 9002 certified.

B. Water heating coil shall be provided. Provide access to coil(s) for service and cleaning. Enclose coil headers and return bends fully within unit casing. Unit shall be provided with coil connections that extend a minimum of 5" beyond unit casing for ease of installation. Drain and vent connections shall be provided exterior to unit casing. Coil connections must be factory sealed with grommets on interior and exterior panel liners to minimize air leakage and condensation inside panel assembly. If not factory packaged, Contractor must supply all coil connection grommets and sleeves. Coils shall be removable through side and/or top panels of unit without the need to remove and disassemble the entire section from the unit.

1. Headers shall consist of seamless copper tubing to assure compatibility with primary surface. Headers to have intruded tube holes to provide maximum brazing surface for tube to header joint, strength, and inherent flexibility. Header diameter should vary with fluid flow requirements.
2. Fins shall have a minimum thickness of 0.0075 inch aluminum plate construction. Fins shall have full drawn collars to provide a continuous surface cover over the entire tube for maximum heat transfer. Tubes shall be mechanically expanded into the fins to provide a continuous primary to secondary compression bond over the entire finned length for maximum heat transfer rates. Bare copper tubes shall not be visible between fins.
3. Coil tubes shall be 5/8 inch OD seamless copper, 0.020 inch nominal tube wall thickness, expanded into fins, brazed at joints.
4. Coil connections shall be copper tube, OD sweat connection. Connection size to be determined by manufacturer based upon the most efficient coil circuiting. Vent and drain fittings shall be furnished on the connections, exterior to the air handler. Vent connections provided at the highest point to assure proper venting. Drain connections shall be provided at the lowest point to insure complete drainage and prevent freeze-up.
5. Coil shall be furnished as an uncased galvanized steel track to allow for thermal movement and slide into a pitched track for fluid drainage.

2.6 FILTERS

A. Furnish flat panel filter section with 2-inch pleated (MERV 8) filter with microbial resistant Intersept coating. Provide side loading and removal of filters.

B. Filter media shall be UL 900 listed, Class I or Class II.

C. Filter Magnehelic gauge(s) shall be furnished and mounted by equipment manufacturer.

2.7 ADDITIONAL SECTIONS

A. Economizer section shall be provided with top outside air opening and end return air opening and top exhaust air opening with or without parallel low leak airfoil damper blades. Dampers shall be hollow core galvanized steel airfoil blades, fully gasketed and have continuous vinyl seals between damper blades in a galvanized steel frame. Dampers shall have stainless steel jamb seals along end of dampers. Linkage and ABS plastic end caps shall be provided when return and outside air dampers sized for full airflow. Return and outside air dampers of different sizes or very large dampers and exhaust dampers must be driven separately. Damper Leakage: Leakage rate shall be less than two tenths of one percent leakage at 2 inches static pressure differential. Leakage rate tested in accordance with AMCA Standard 500.

PART 3 EXECUTION

3.1 INSTALLATION

A. Install flexible connections between unit and inlet and discharge ductwork. Install metal bands of connectors parallel with minimum 1 inch flex between ductwork and fan while running.

B. Install assembled units with vibration isolators. Install isolated fans with resilient mountings and flexible electrical leads. Install restraining snubbers as required. Adjust snubbers to prevent tension in flexible connectors when fan is operating.

C. Install floor mounted units on concrete housekeeping pads at least 3-1/2 inches high and 6 inches wider than unit.

D. Provide sheaves required for final air balance.

3.2 INSTALLATION HOT WATER HEATING COIL

A. Make connections to coils with unions or flanges.

B. Connect water supply to leaving airside of coil (counter flow arrangement).

C. Locate water supply at bottom of supply header and return water connection at top.

D. Install water coils to allow draining and install drain connection at low points.

E. Install valves and piping specialties in accordance with details as indicated on Drawings.

3.3 CLEANING

A. Vacuum clean coils and inside of unit cabinet.

B. Install temporary filters during construction period. Replace with permanent filters at Substantial Completion.

3.4 DEMONSTRATION

A. Demonstrate unit operation and maintenance.

B. Furnish services of manufacturer's technical representative for one 8 hour day to instruct Owner's personnel in operation and maintenance of units. Schedule training with Owner, provide at least 7 day’s notice to Owner of training date.

3.5 PROTECTION OF FINISHED WORK

A. Do not operate units until ductwork is clean, filters are in place, bearings lubricated, and fan has been test run under observation.

END OF SECTION

PART 1 GENERAL

1.1 SUMMARY

A. Section Includes:
1. Duct Materials.
2. Flexible ducts.
3. Insulated flexible ducts.
4. Ductwork fabrication.
5. Duct cleaning.

1.2 REFERENCES

A. ASTM International:
1. ASTM A36/A36M - Standard Specification for Carbon Structural Steel.
2. ASTM A90/A90M - Standard Test Method for Weight Mass of Coating on Iron and Steel Articles with Zinc or Zinc-Alloy Coatings.
3. ASTM A167 - Standard Specification for Stainless and Heat-Resisting Chromium-Nickel Steel Plate, Sheet, and Strip.
4. ASTM A568/A568M - Standard Specification for Steel, Sheet, Carbon, and High-Strength, Low-Alloy, Hot-Rolled and Cold-Rolled, General Requirements for.
5. ASTM A653/A653M - Standard Specification for Steel Sheet, Zinc-Coated (Galvanized) or Zinc-Iron Alloy-Coated (Galvannealed) by the Hot-Dip Process.
6. ASTM A1008/A1008M - Standard Specification for Steel, Sheet, Cold-Rolled, Carbon, Structural, High-Strength Low-Alloy and High-Strength Low-Alloy with Improved Formability.
7. ASTM A1011/A1011M - Standard Specification for Steel, Sheet and Strip, Hot-Rolled, Carbon, Structural, High-Strength Low-Alloy and High-Strength Low-Alloy with Improved Formability.
8. ASTM B209 - Standard Specification for Aluminum and Aluminum-Alloy Sheet and Plate.
9. ASTM C14 - Standard Specification for Concrete Sewer, Storm Drain, and Culvert Pipe.
10. ASTM C443 - Standard Specification for Joints for Circular Concrete Sewer and Culvert Pipe, Using Rubber Gaskets.
11. ASTM E84 - Standard Test Method for Surface Burning Characteristics of Building Materials.

B. National Fire Protection Association:
1. NFPA 90A - Standard for the Installation of Air Conditioning and Ventilating Systems.
2. NFPA 90B - Standard for the Installation of Warm Air Heating and Air Conditioning Systems.
3. NFPA 96 - Standard for Ventilation Control and Fire Protection of Commercial Cooking Operations.

C. Sheet Metal and Air Conditioning Contractors:
1. SMACNA - Fibrous Glass Duct Construction Standards.
2. SMACNA - HVAC Air Duct Leakage Test Manual.

3. SMACNA - HVAC Duct Construction Standard - Metal and Flexible.

D. Underwriters Laboratories Inc.:
1. UL 181 - Factory-Made Air Ducts and Connectors.

1.3 PERFORMANCE REQUIREMENTS

A. Variation of duct configuration or sizes other than those of equivalent or lower loss coefficient is not permitted except by written permission. Size round ducts installed in place of rectangular ducts in accordance with ASHRAE table of equivalent rectangular and round ducts.

1.4 SUBMITTALS

A. Shop Drawings: Submit duct fabrication drawings, drawn to scale not smaller than 1/8 inch equals 1 foot, on drawing sheets same size as Contract Documents, indicating:
1. Fabrication, assembly, and installation details, including plans, elevations, sections, details of components, and attachments to other work.
2. Duct layout, indicating pressure classifications and sizes in plain view. For exhaust duct systems, indicate classification of materials handled as defined in this section.
3. Fittings.
4. Reinforcing details and spacing.
5. Seam and joint construction details.
6. Penetrations through fire rated and other walls.
7. Coil installations.
8. Hangers and supports, including methods for building attachment, vibration isolation, and duct attachment.

B. Product Data: Submit data for duct materials.

C. Test Reports: Indicate pressure tests performed. Include date, section tested, test pressure, and leakage rate, following SMACNA HVAC Air Duct Leakage Test Manual.

1.5 ENVIRONMENTAL REQUIREMENTS

A. Do not install duct sealant when temperatures are less than those recommended by sealant manufacturers.

B. Maintain temperatures during and after installation of duct sealant.

1.6 FIELD MEASUREMENTS

A. Verify field measurements prior to fabrication.

PART 2 PRODUCTS

2.1 DUCT MATERIALS

A. Galvanized Steel Ducts: ASTM A653/A653M galvanized steel sheet, lock-forming quality, having G60 zinc coating of in conformance with ASTM A90/A90M.

B. Fasteners: Rivets, bolts, or sheet metal screws.

C. Hanger Rod: ASTM A36/A36M; steel; threaded both ends, threaded one end, or continuously threaded.

2.2 FLEXIBLE DUCTS

A. Product Description: Two ply vinyl film supported by helical wound spring steel wire.
1. Pressure Rating: 10 inches wg positive and 1.0 inches wg negative.
2. Maximum Velocity: 4000 fpm.
3. Temperature Range: -10 degrees F to 160 degrees F.

2.3 INSULATED FLEXIBLE DUCTS

A. Product Description: Two ply vinyl film supported by helical wound spring steel wire; fiberglass insulation; vapor barrier film.
1. Pressure Rating: 10 inches wg positive and 1.0 inches wg negative.
2. Maximum Velocity: 4000 fpm.
3. Temperature Range: -10 degrees F to 160 degrees F.
4. Thermal Resistance: 4.2 square feet-hour-degree F per BTU.

2.4 DUCTWORK FABRICATION

A. Fabricate and support rectangular ducts in accordance with SMACNA HVAC Duct Construction Standards - Metal. Provide duct material, gages, reinforcing, and sealing for operating pressures indicated.

B. Fabricate and support round ducts with longitudinal seams in accordance with SMACNA HVAC Duct Construction Standards - Metal and Flexible (Round Duct Construction Standards). Provide duct material, gages, reinforcing, and sealing for operating pressures indicated.

C. Construct T's, bends, and elbows with minimum radius 1-1/2 times centerline duct width. Where not possible and where rectangular elbows are used, provide airfoil turning vanes. Where acoustical lining is indicated, furnish turning vanes of perforated metal with glass fiber insulation.

D. Increase duct sizes gradually, not exceeding 15 degrees divergence wherever possible; maximum 30 degrees divergence upstream of equipment and 45 degrees convergence downstream.

E. Provide standard 45-degree lateral wye takeoffs. When space does not allow 45-degree lateral wye takeoff, use 90-degree conical tee connections.

PART 3 EXECUTION

3.1 EXAMINATION

A. Verify sizes of equipment connections before fabricating transitions.

3.2 INSTALLATION

A. Install and seal ducts in accordance with SMACNA HVAC Duct Construction Standards - Metal and Flexible.

B. Install glass fiber ducts in accordance with SMACNA Fibrous Glass Duct Construction Standards. Obtain manufacturer's inspection and acceptance of fabrication and installation at beginning of installation.

C. During construction, install temporary closures of metal or taped polyethylene on open ductwork to prevent construction dust from entering ductwork system.

D. Use double nuts and lock washers on threaded rod supports.

E. Connect flexible ducts to metal ducts with adhesive plus sheet metal screws.

F. Set plenum doors 6 to 12 inches above floor. Arrange door swing so fan static pressure holds door in closed position.

3.3 FLEXIBLE DUCT

A. Limit flexible duct lengths to a maximum of 5 feet on low pressure duct.

B. Changes in direction greater than 45 degrees with flexible duct shall not be allowed. Use hard elbow fittings.

C. Do not allow duct to be crimped in horizontal or in vertical connections to diffusers.

3.4 INTERFACE WITH OTHER PRODUCTS

A. Install openings in ductwork where required to accommodate thermometers and controllers. Install pitot tube openings for testing of systems. Install pitot tube complete with metal can with spring device or screw to prevent air leakage. Where openings are provided in insulated ductwork, install insulation material inside metal ring.

B. Connect diffusers or light troffer boots to low pressure ducts directly or with 5 feet maximum length of flexible duct held in place with strap or clamp.

C. Connect air outlets and inlets to supply ducts with five foot maximum length of flexible duct. Do not use flexible duct to change direction.

3.5 CLEANING

A. Clean duct system and force air at high velocity through duct to remove accumulated dust.

To obtain sufficient air flow, clean one half of system completely before proceeding to other half. Protect equipment with potential to be harmed by excessive dirt with temporary filters, or bypass during cleaning.

B. Clean duct systems with high power vacuum machines. Protect equipment with potential to be harmed by excessive dirt with filters, or bypass during cleaning. Install access openings into ductwork for cleaning purposes.

3.6 SCHEDULES

A. Ductwork Material Schedule:

AIR SYSTEM	MATERIAL
Supply (Heating Systems)	Steel
Return and Relief	Steel
General Exhaust	Steel
Outside Air Intake	Steel

END OF SECTION

[This page intentionally left blank.]

PART 1 GENERAL

1.1 SUMMARY

A. Section Includes:
1. Back-draft dampers.
2. Duct access doors.
3. Volume control dampers.
4. Flexible duct connections.
5. Duct test holes.
6. Dial thermometers.
7. Static pressure gages.

1.2 REFERENCES

A. Air Movement and Control Association International, Inc.:
1. AMCA 500 - Test Methods for Louvers, Dampers, and Shutters.

B. ASTM International:
1. ASTM E1 - Standard Specification for ASTM Thermometers.

C. National Fire Protection Association:
1. NFPA 90A - Standard for the Installation of Air Conditioning and Ventilating Systems.
2. NFPA 92A - Recommended Practice for Smoke-Control Systems.

D. Sheet Metal and Air Conditioning Contractors:
1. SMACNA - HVAC Duct Construction Standard - Metal and Flexible.

E. Underwriters Laboratories Inc.:
1. UL 555 - Standard for Safety for Fire Dampers.
2. UL 555C - Standard for Safety for Ceiling Dampers.
3. UL 555S - Standard for Safety for Smoke Dampers.

1.3 SUBMITTALS

A. Shop Drawings: Indicate for shop fabricated assemblies including volume control dampers, duct access doors and duct test holes.

B. Product Data: Submit data for shop fabricated assemblies and hardware used.

1.4 CLOSE-OUT DOCUMENTS

A. Product Data: Provide as-built information of submittal requirements.

B. Maintenance: Provide operation and maintenance manuals for equipment noting model number, part numbers, and regular maintenance schedules.

1.5 FIELD MEASUREMENTS

A. Verify field measurements prior to fabrication.

PART 2 PRODUCTS

2.1 BACK-DRAFT DAMPERS

A. Product Description: Multi-Blade, back-draft dampers: Parallel-action, gravity-balanced, Galvanized 16 gage thick steel, or extruded aluminum. Blades, maximum 6 inch width, center pivoted, with felt or flexible vinyl sealed edges. Blades linked together in rattle-free manner with 90-degree stop, steel ball bearings, and plated steel pivot pin. Furnish dampers with adjustment device to permit setting for varying differential static pressure.

2.2 DUCT ACCESS DOORS

A. Fabricate in accordance with SMACNA HVAC Duct Construction Standards - Metal and Flexible, and as indicated on Drawings.

B. Fabrication: Rigid and close fitting of galvanized steel with sealing gaskets and quick fastening locking devices. For insulated ductwork, furnish minimum 1 inch thick insulation with sheet metal cover.
1. Less than 12 inches square, secure with sash locks.
2. Up to 18 inches Square: Furnish two hinges and two sash locks.
3. Up to 24 x 48 inches: Three hinges and two compression latches.
4. Larger Sizes: Furnish additional hinge.
5. Access panels with sheet metal screw fasteners are not acceptable.

2.3 VOLUME CONTROL DAMPERS

A. Fabricate in accordance with SMACNA HVAC Duct Construction Standards - Metal and Flexible, and as indicated on Drawings.

B. Splitter Dampers:
1. Material: Same gage as duct to 24 inches size in both dimensions, and two gages heavier for sizes over 24 inches.
2. Blade: Fabricate of single thickness sheet metal to streamline shape, secured with continuous hinge or rod.
3. Operator: Minimum 1/4 inch diameter rod in self aligning, universal joint action, flanged bushing with set screw.
4. Single Blade Dampers: Fabricate for duct sizes up to 6 x 30 inch.

C. Multi-Blade Damper: Fabricate of opposed blade pattern with maximum blade sizes 8 x 72 inch. Assemble center and edge crimped blades in prime coated or galvanized frame channel with suitable hardware.

D. End Bearings: Except in round ductwork 12 inches and smaller, furnish end bearings. On multiple blade dampers, furnish oil-impregnated nylon or sintered bronze bearings. Furnish closed end bearings on ducts having pressure classification over 2 inches wg.

E. Quadrants:
1. Furnish locking, indicating quadrant regulators on single and multi-blade dampers.
2. On insulated ducts mount quadrant regulators on standoff mounting brackets, bases, or adapters.
3. Where rod lengths exceed 30 inches furnish regulator at both ends.

2.4 FLEXIBLE DUCT CONNECTIONS

A. Fabricate in accordance with SMACNA HVAC Duct Construction Standards - Metal and Flexible, and as indicated on Drawings.

B. Connector: Fabric crimped into metal edging strip.
1. Fabric: UL listed fire-retardant neoprene coated woven glass fiber fabric conforming to NFPA 90A, minimum density 30 oz per sq yd.
2. Net Fabric Width: Approximately 6 inches wide.
3. Metal: 3 inch wide, 24 gage galvanized steel.

2.5 DUCT TEST HOLES

A. Permanent Test Holes: Factory fabricated, air tight flanged fittings with screw cap. Furnish extended neck fittings to clear insulation.

2.6 DIAL THERMOMETERS

A. Thermometer: ASTM E1, stainless steel case, bimetallic helix actuated with silicone fluid damping, white with black markings and black pointer hermetically sealed lens, stainless steel stem.
1. Size: 3-1/2 inch diameter dial.
2. Lens: Clear Lexan.
3. Accuracy: 1 percent.
4. Calibration: Degrees F.

2.7 STATIC PRESSURE GAGES

A. Manufacturers: Dwyer

B. Dial Gages: 3-1/2 inch diameter dial in metal case, diaphragm actuated, black figures on white background, front calibration adjustment, 2 percent of full scale accuracy.

C. Inclined Manometer: Plastic with red liquid on white background with black figures, front calibration adjustment, 3 percent of full scale accuracy.

D. Accessories: Static pressure tips with compression fittings for bulkhead mounting, 1/4 inch diameter tubing.

PART 3 EXECUTION

3.1 EXAMINATION

A. Verify ducts and equipment installations are ready for accessories.

B. Check location of air outlets and inlets and make necessary adjustments in position to conform to architectural features, symmetry, and lighting arrangement.

3.2 INSTALLATION.

A. Install equipment in accordance with manufacturer's installation recommendations and code.

B. Install in accordance with NFPA 90A, and follow SMACNA HVAC Duct Construction Standards - Metal and Flexible. Refer to Section 15810 for duct construction and pressure class.

C. Install back-draft dampers on exhaust fans or exhaust ducts nearest to outside and where indicated on Drawings.

D. Access Doors: Install access doors at the following locations and as indicated on Drawings:
1. Before and after each duct mounted coil.
2. Before and after each automatic control damper.

E. Access Door Sizes: Install minimum 8 x 8 inch size for hand access, 18 x 18 inch size for shoulder access, and as indicated on Drawings. Review locations prior to fabrication.

F. Manual volume damper handles installed on insulated ducts shall be painted.

G. Install temporary duct test holes as required for testing and balancing purposes. Cut or drill in ducts. Cap with neat patches, neoprene plugs, threaded plugs, or threaded or twist-on metal caps.

3.3 INSTALLATION - THERMOMETERS

A. Install thermometers in air duct systems on flanges.

B. Where thermometers are provided on local panels, duct mounted thermometers are not required.

C. Locate duct-mounted thermometers minimum 10 feet downstream of mixing-dampers, coils, or other devices causing air turbulence.

D. Install static pressure gages to measure across filters and filter banks, (inlet to outlet). On multiple banks, provide manifold and single gage.

E. Provide instruments with scale ranges selected according to service with largest appropriate scale.

F. Install thermometers in locations where they are easily read from normal operating level. Install vertical to 45 degrees off vertical.

G. Adjust thermometers to final angle, clean windows and lenses, and calibrate to zero.

END OF SECTION

[This page intentionally left blank.]

PART 1 GENERAL

1.1 RELATED SECTIONS

A. Section 15940 – Sequence of Operation

1.2 DESCRIPTION OF WORK

A. This section specifies the requirements for the Building Automation System (BAS) to be installed in conjunction with this project.

B. The BAS contractor shall furnish and install a fully integrated building automation system, incorporating direct digital control (DDC) and electric control for energy management, equipment monitoring and control, and subsystems as specified herein.

C. All materials and equipment used shall be standard components, regularly manufactured for this and/or other systems and not custom designed specifically for this project. All systems and components shall have been thoroughly tested and proven in actual use for at least two years.

D. The BAS contractor shall be responsible for all BAS and temperature control wiring for a complete and operable system. All wiring shall be done in accordance with Division 16 of this specification and all local and national codes.

E. The BAS contractor shall interface all work with the existing graphical operator's workstation for local control and monitoring of the BAS system.

F. The BAS system shall be capable of remote monitoring via the owner's Ethernet network. A dedicated Ethernet connection will be provided by the owner.

G. ADDITIVE ALTERNATE #1:
1. This alternate includes the work required to convert existing DDC graphic points from the existing Honeywell and Johnson Controls systems into full equipment graphics.
2. Project scope includes renaming of areas of work to current function.
3. Names for the graphics screens that are to be converted include: Admin, Bldg-B & C, BLR, STV Class, CO-1, CO-2, CO-3, CO-4, and CO-5.

1.3 WORK BY OTHERS

A. Products furnished by the BAS contractor for installation by the Mechanical contractor:
1. Control valves.
2. Wells for hydronic temperature sensors.

B. Products provided and installed by Mechanical contractor:
1. Gauges, thermometers, instrumentation and thread-o-lets for sensor wells.
2. Control dampers.

C. The Electrical contractor (Division 16) provides:
1. Mounting and power wiring of variable frequency drives (VFDs) furnished by the BAS contractor.
2. Wiring of all power feeds through disconnects and starters to electrical motors.
3. Wiring of any remote start/stop switches and manual or automatic motor speed control devices not furnished by the BAS contractor
4. Power wiring.
5. Stand-alone packaged controls and wiring of stand-alone packaged controls to their remote sensors and devices, unless specifically shown on the mechanical drawings.
6. Ethernet data port as required at the designated BAS control panel.

1.4 SUBMITTALS / O&M MANUALS

A. All submittals will be bound in white D-ring binders with sufficient ring capacity available for future additions. An electronic version shall also be made available. Reference Division 15, Section 15010 for additional requirements.

B. Progression from Submittal to O&M Manual can take place using the same binders as long as all applicable material is properly updated.

C. Prior to beginning on-site installation, the BAS contractor will submit four (4) complete sets of documentation containing the following:
1. Sequence of Operations (Designer to provide electronic text version)
2. Riser Diagrams
3. Control Diagrams
4. Panel layout(s)
5. Valve Schedule
6. Point Summary Report
7. Product Data

D. The O&M Manuals will consist of the following:
1. Sequence of Operations
2. Riser Diagrams
3. Control Diagrams
4. Panel layouts
5. Valve Schedule
6. Point Summary Report
7. Commented Program Code
8. Trend Logs
9. Product Data

1.5 INSTALLATION SCHEDULING AND COORDINATION

A. Interface new work with existing facility infrastructure and central monitoring station.

B. Remove all controls-related, wiring and pneumatic tubing and electrical conduit that is not reused as part of the new direct digital control and monitoring system.

C. Patch any holes in existing ductwork at removed sensors that are not reused, with sheet metal patches of equal gauge or heavier. Seal airtight with adhesive and then screwed or pop riveted to the ductwork.

PART 2 PRODUCTS

2.1 ACCEPTABLE MANUFACTURERS

A. Acceptable manufacturers are limited to the following:
1. Siemens Industry, Inc. 5333 Fairbanks St., Ste. B, Anchorage, AK 99518. Contact Siemens at (907) 563-2242 for specific questions.
2. No Substitutions, No Alternate Brands Allowed.

2.2 NETWORKING COMMUNICATIONS

A. The design of the BAS shall network one new operator workstation and stand-alone DDC Controllers. The network architecture shall consist of three levels; a campus-wide Management Level Network (MLN) Ethernet network based on TCP/IP protocol, a high performance peer-to-peer building level network (BLN) and DDC Controller floor level local area networks (FLN). Access to the system shall be totally transparent to the user when accessing data or developing control programs.

B. The design of the BAS shall allow the co-existence of new DDC Controllers with existing DDC Controllers on the same network without the use of gateways, protocol converters, or third-party interface devices.

C. Management Level Network
1. All PCs shall simultaneously direct connect to the Ethernet and Management Level Network without the use of an interposing device.
2. The Management Level Network shall not impose a maximum constraint on the number of operator workstations.
3. Simultaneous user access to network limited to number of sight licenses issued to user.
4. When appropriate, any DDC controller residing on the peer-to-peer building level network shall connect to Ethernet network without the use of a PC.
5. Any PC on the Ethernet Management Level Network shall have transparent communication with controllers on the building level networks connected via Ethernet as well as directly connected building level networks. Any PC shall be able to interrogate any controller on the building level network in addition to being able to download program changes to individual controllers.
6. The Management Level Network shall reside on industry standard Ethernet utilizing standard TCP/IP, IEEE 802.3. The Ethernet system will be provided and maintained by UAF.
7. Access to the system database shall be available from any client workstation on the Management Level Network.

D. Peer-to-Peer Building Level Network (BLN)
   1. The system shall have the ability to support integration of third party systems (fire alarm, security, lighting, Variable Frequency Drives, PLCs, chillers, boilers) via a panel mounted open protocol processor. This processor shall exchange data between the two systems for inter-process control. All exchange points shall have full system functionality as specified herein.
   2. Data transfer via RS485.

E. Floor Level Network (FLN)
   1. This level communication shall support a family of application specific controllers and shall communicate with the peer-to-peer network through DDC Controllers for transmission of global data.

2.3 PERSONAL COMPUTER OPERATOR WORKSTATION

A. A standard PC workstation shall be provided in the location(s) indicated on the contract documents for command entry, information management, network alarm management and database management functions. All real-time control functions shall be resident in the DDC Controllers to facilitate greater fault tolerance and reliability.

B. A new PC workstation is not required if there is an existing workstation already installed on site. The existing workstation shall be updated at the completion of this project to reflect any additions and changes made during this project.

2.4 HVAC CONTROLLERS

A. Digital HVAC controllers shall be the PXC-Modular or PXC-Compact series manufactured by Siemens. Controllers shall be a 12-bit stand-alone, multi-tasking, multi-user, real-time digital control processors consisting of modular hardware with plug-in enclosed processors.

B. Each HVAC Controller shall have sufficient memory to support its own operating system and databases, including:
   1. Control processes
   2. Energy management applications
   3. Alarm management applications including custom alarm messages for each level alarm for each point in the system.
   4. Historical/trend data for points specified
   5. Maintenance support applications
   6. Custom processes
   7. Operator I/O
   8. Remote communications

C. HVAC Controllers shall provide a RS-232C serial data communication port for operation of operator I/O devices such as industry standard printers, operator terminals, modems and portable laptop operator's terminals

D. HVAC Equipment Controllers shall provide local LED status indication for each digital input and output for constant, up-to-date verification of all point conditions without the need for an operator I/O device.

E. Each HVAC Equipment Controller shall continuously perform self-diagnostics, communication diagnosis and diagnosis of all components. The HVAC Equipment Controller shall provide both local and remote annunciation of any detected component failures, low battery conditions or repeated failure to establish communication

F. All controllers will be mounted in enclosed control panels with screwed, removable covers.

G. All control devices located in exposed areas subject to outside weather conditions shall be mounted inside weatherproof enclosures. Location of each panel shall be convenient for adjustment service.

H. Nameplates shall be provided beneath each panel face mounted control device describing the function of each device. Nameplates shall have white letters engraved on blue Lamicoid, or approved equal.

I. All control panels shall bear a UL label compatible with the application.

J. All electrical devices within the panel shall pre-wired to terminal strips with all inter-device wiring within the panel completed prior to installation of the system.

2.5 TERMINAL EQUIPMENT CONTROLLERS (TEC)

A. Control of terminal units such as VAV boxes, fan-coli units and reheat coils shall be accomplished by a microprocessor based stand-alone controller utilizing direct digital control. The Terminal Equipment Controller (TEC) shall interface to the building control system in a multi-drop communications network originating at the DDC field panel. An individual controller shall be provided for each terminal unit. The terminal controller must be listed by Underwriters Laboratory under UL 916 PAZX and UL 864 UDTZ.

B. For VAV boxes, the controls contractor shall furnish the terminal controller (controller and damper motor) to the terminal unit manufacturer for factory mounting. Costs associated with factory mounting of terminal controller shall be the responsibility of the terminal unit manufacturer. The terminal box manufacturer shall provide a duct probe air velocity sensor suitable for interfacing with the TEC’s differential pressure transducer.

C. TEC valve and damper actuators shall be of the 24 VAC floating point type. Upon power loss, the actuator will maintain its current damper position. Position status is shown in percentage open notation.

D. TECC room temperature sensors shall come complete with a terminal jack and programmable override switch integral to the sensor assembly. The terminal jack shall be used to connect a portable operator’s terminal to control and monitor all hardware and software points associated with the terminal unit. An override switch shall initiate override of the night setback or unoccupied mode to normal operation when activated. A thumbwheel-type temperature setpoint dial shall also be provided with 1 Deg F temperature increments. Override switch and temperature setpoint functions may be locked out, canceled or limited as to time or temperature via software.

2.6 AUTOMATIC CONTROL VALVES

A. All automatic control valves shall be fully proportioning with modulating plugs for equal percentage or linear flow characteristics. The valves shall be sized by the BAS contractor and be provided with actuators of sufficient power for the duty intended. Valve body and actuator selection shall be sufficient to handle system pressure and shall close against the differential pressures expected to be encountered on the project. Butterfly valves are not acceptable.

B. Valves - 1/2 in. through 1 in. diameter: Valves shall be constructed with cast iron, brass or stainless bodies. Trim shall consist of a removable cage providing valve plug guiding throughout the entire travel range. A stainless steel stem shall be provided. Bonnet, cage and the stem and plug assembly shall be removable for servicing. Actuator shall be cast aluminum with spring-return piston operated by synthetic rubber diaphragm. Body rating shall be 400-PSI at 150 degrees F.

C. Valves - 1-1/2 in. through 2 in. diameter: Valves shall be constructed with cast iron, brass or stainless bodies. For special duty, valves may be selected by the BAS contractor to have either bronze or cast iron bodies with screwed or flanged ends. Valves shall have either piston or diaphragm actuators as required.

D. Valves - 2-1/2 in. diameter and above: Valves shall be constructed with cast iron, brass or stainless bodies and have flanged connections.

E. Valves shall be selected for maximum 3.0-PSI pressure drop through valve at design flow.

F. Unless otherwise noted in the sequence of operation, heating valves shall fail in the position that provides heat to the space and control damper actuators are to fail in a position that protects the space from freezing.

2.7 SENSORS

A. All electronic temperature sensors shall be standard resistance type for all temperature ranges. All electronic temperature sensors shall be factory calibrated and of tamper proof construction requiring no field calibration. Temperature sensor accuracy shall be a minimum of +/- 1%. To insure system accuracy, a common sensor shall be used for each control loop to provide control, indication (local and central), alarm indication (local and central) and where multi-control functions, such as discharge temperature control with compensation and positive high and low limits are used.

B. Where the sensor is used for sensing of mixed air temperature or air handler coil discharge temperatures, and/or the duct area cross-section is in excess of 14 square feet, the instrument shall incorporate an averaging element. Outside air sensing shall be accomplished using a sensing element and transmitter shielded from the effects of sunlight.

C. Sensors shall be furnished in scale ranges compatible with system operating range.

D. Where sensors are used for sensing liquid temperatures, they shall be furnished with separable wells or appropriate material.

2.8 THERMOSTATS

A. Electronic Room Temperature Sensors: Shall be thermistor type with 55 degree F to 95 degree F range. Optional features include: LED display, slider bar and night setback button. Covers shall be robust, of institutional quality, suitably finished. Covers will be sensing only unless otherwise noted to include optional features. Siemens Series 1000 sensing only.

B. Line-voltage Thermostats: Shall have bi-metal switches with a rating of at least 1.2 times the load they are handling. Covers will be sensing only.

C. Provide lockable guards over temperature sensors in entries and corridors. Flat plate temperature sensors (adjustable through programming only) may be used in these locations.

2.9 PRESSURE GAUGES AND THERMOMETERS

A. To be provided and installed by the mechanical contractor as specified elsewhere.

2.10 RELAYS AND SIGNAL TRANSMITTERS

A. All necessary relays and signal boosters shall be furnished to make the system a full and operable system as required by the Sequence of Operations.

2.11 AIR AND WATER FLOW PROOF DEVICES

A. Provide current operated relays as standard proof devices. Pressure differential switches may be used as directed. Paddle type flow switches are not acceptable.
   1. Provide solid-state, adjustable, current operated relay. Provide a relay that changes switch contact state in response to an adjustable set point value of current in the monitored A/C circuit.
   2. Adjust the relay switch point so that the relay responds to motor operation under load as an ON state and so that the relay responds to an unloaded running motor as an OFF state. A motor with a broken belt is considered an unloaded motor.

B. Provide status device for any fans, motors and pumps as reference in the Sequence of Operations.

PART 3 EXECUTION

3.1 RELATED DOCUMENTS

A. Refer to General Conditions, Basic Materials and Methods and Division 16.

3.2 GENERAL

A. Do not install control devices in locations where they are subject to damage or malfunction due to normally encountered ambient temperatures.

B. Mount damper operators and other control devices secured to insulated ductwork on brackets such that the device is external of the insulation.

3.3 IDENTIFICATION

A. All controllers, switches, relays, thermostats and actuators shall be permanently tagged for identification.

B. The tagging scheme shall be reflected on the control drawings.

C. Submit proposed identification method, specifically listing each device and the identification tag to be applied.

3.4 SENSORS AND SWITCHES

A. Pump flow or fan flow, etc, shall be sensed using current switch unless indicated otherwise. Calibrate current switch to distinguish between loaded or unloaded motor condition due to belt or coupler breakage.

3.5 WIRING

A. Install, connect and wire the items included under this Section. This work includes providing required conduit, wire, fittings, and related wiring accessories. All wiring in exposed or inaccessible areas shall be installed in EMT conduit. Plenum-rated cable may be used in concealed, accessible areas only, such as plenums above suspended ceilings or raised floors.

B. Provide wiring between thermostats and unit heater motors, and all control and alarm wiring.

C. Where possible, pull new wiring through existing conduit and down through existing concrete walls.

D. Provide conduit and wiring between the BAS panels and the temperature, humidity, or pressure sensing elements, including low voltage control wiring in conduit or plenum-rated cable.
   1. In exposed, finished areas, where new wiring cannot be routed through existing pneumatic tube path, Wiremold is acceptable for surface-mounted raceway for low-voltage control wiring. Paint to match surrounding.

E. Provide conduit and control wiring for devices specified in this Section.

F. Provide conduit and signal wiring between motor starters in motor control centers and high and/or low temperature relay contacts and remote relays in BAS panels located in the vicinity of motor control centers.

G. Provide conduit and wiring between the PC workstation, electrical panels, metering instrumentation, indicating devices, miscellaneous alarm points, remotely operated contactors, and BAS panels, as shown on the drawings or as specified.

H. All wiring to be compliant with the Division 16 requirements and the NEC.

I. Provide electrical wall boxes and conduit sleeves for all wall-mounted devices. Mount thermostats at 48 inches AFF unless otherwise noted.

3.6 GRAPHICS

A. Under Additive Alternate #1, existing DDC data points from the existing Honeywell and Johnson Control systems are to incorporated into the Apogee Graphical User Interface with equipment schematic diagrams. Data points and verbiage are to be added to the graphics so that they appear the same as native Apogee system graphics.

3.7 WARRANTY

A. Upon completion of the project, as defined in the Contract Conditions, a warranty period of one (1) year shall commence. The warranty shall consist of a commitment by the BAS contractor to provide, at no cost to the Owner, parts and labor as required to repair or replace such parts of the control system that prove inoperative due to defective materials or installation practices. The warranty expressly excludes routine service such as instrument calibration.

3.8 TREND LOGS

A. BAS contractor shall prepare trend logs for all points required to show system calibration and stability.

B. These logs shall document building operation after the installation, balancing and calibration is completed and after the control system is fully operational. Setpoints, valve positions, etc. shall be adjusted to artificially induce the sequences to occur.

3.9 SUBSTANTIAL COMPLETION

A. BAS contractor shall demonstrate complete and proper operation of all systems per the Sequence of Operations.

B. The demonstration shall include, but not necessarily be limited to, the following:
1. Review of the Trend Logs.
2. Complete and proper operation of control systems including simulations.
3. Access to all devices for required maintenance.
4. Review of associated graphics on the operator workstation.

3.10 TRAINING

A. Eight (8) hours of on-site instruction will be provided by the BAS contractor to familiarize operating personnel with the control system. instructions will include:
1. A brief description of the controls' sequence of operation.

2. A discussion and explanation of all alarms, switches and gauges.
3. A summary and explanation of steps to be taken in response to specific alarms or control malfunctions.
4. Building walk-through to physically locate and examine all control devices and demonstrate control setpoint adjustment procedures.
5. Instructions regarding adjustment procedures shall emphasize methods for continual building "fine-tuning".

3.11 SEQUENCE OF OPERATION

A. Reference: Section 15940 – SEQUENCE OF OPERATION.

END OF SECTION

PART 1 GENERAL

1.1 SECTION INCLUDES

A. Glycol Heating Loop

B. Air Handler Units

C. Reheat Coils

D. Unit Heaters

1.2 BID ALTERNATES

A. There are portions of the sequence of operation that are included as Additive Alternates.

PART 2 PRODUCTS

Not Used.

PART 3 EXECUTION

3.1 GENERAL

A. All points and alarms noted here shall be displayed on the existing Siemens Graphical User Interface for monitoring and controlling the building. All points outlined shall be addressable through the same means. All points shall be programmable from the host computer and graphics shall be prepared for all points. All setpoints shall be adjustable through the graphics. All safety shutdowns shall be hardwired and shall not be dependent on the DDC for operation.

All work outlined here shall be controlled by the DDC and connected to the DDC unless otherwise noted. The graphics and the monitoring and control tags shall be fully integrated into the existing host system.

1. ADDITIVE ALTERNATE #1:
   a. This alternate includes the work required to convert existing DDC graphic points from the existing Honeywell and Johnson Controls systems into full equipment graphics.
   b. Project scope includes renaming of areas of work to current function.
   c. Names for the graphics screens that are to be converted include: Admin, Bldg-B & C, BLR, STV Class, CO-1, CO-2, CO-3, CO-4, and CO-5.

B. All work outlined here shall be controlled by the Building Automation System (BAS) and connected to the BAS unless otherwise noted.

C. All alarms based on a deviation from setpoint (i.e. 2 degrees F above setpoint) that experiences an offset, such as an outside air reset schedule, shall not be fixed but rather move with the setpoint.

3.2 BASE BID: The following items are included in the base bid:

3.3 GLYCOL HEATING LOOP

A. Applies to:
1. Heat Exchangers HX-1
2. Circulating Pumps P-4B and P-5B
3. Glycol Make-up Tanks GMT-1

B. Heating pumps P-4B and P-5B are variable speed pumps that operate to maintain a differential pressure setpoint located at the air handler in the Probation Wing. The pumps are operated in a primary/back-up configuration. One pump shall be designated as lead pump, the other as lag.

C. Upon call for heat from any of the connected terminal heating devices and coils, the lead glycol pump shall be activated.

D. Adjust VFD controller outputs to modulate pump speed between 30 percent and 100 percent flow to maintain pressure setpoint at differential pressure sensor. Set initial pressure differential setpoint to 8 psig (adjustable).

E. Pump status for failure alarm purposes shall be determined through the VFD. Upon failure of the lead pump, the lag pump shall be automatically activated.

F. The heat exchanger discharge temperature shall be monitored. If the supply temperature drops below 140 degrees F, a maintenance alarm shall be generated.

G. System Pressure: Glycol tank packaged controls shall maintain system pressure, initially set at 12 psi. If system pressure drops below 8 psi, a maintenance alarm shall be generated. Packaged low level alarm shall be sent to the BAS system.

H. The following shall be shown on the graphical user interface:

Points	Type	Alarm
(Typical each pump)		
Enable	DO	–
Speed	AO	–
Pump Status	VFD	Critical
Lead/Lag status	-	–
Remote Differential Pressure	AI	Maintenance
Differential Pressure Setpoint	-	-
Glycol Tank Low Level	DI	Critical
Glycol Supply Temp	DI	Maintenance

3.4 AIR HANDLING UNIT

A. Applies to:
1. Air Handling Unit AHU-12, 13, and 14

B. General Operation: The Air Handling Unit (AHU) shall operate based on an occupancy schedule or occupancy override.

C. Damper Operation: The Outside Air and Relief Air control dampers shall spring fail closed and the Return Air control damper shall spring fail open.

D. Unoccupied Mode: The supply and return fans shall be off. Outside air damper and relief air damper shall be closed. Return air damper shall be open. Heating coil valve shall go to full close or full bypass position.
   1. If room temperature sensors call for heat or if an occupancy override button is pushed in the zone, the zone shall go into Occupied Mode.

E. Occupied Mode: Upon activation, the supply and return air fans will be energized, and the control dampers will modulate to maintain a mixed air temperature setpoint.
   1. Morning Warm-up:
      a. An optimization control strategy shall be used to calculate the time when the air handlers shall be energized in time to have all rooms at setpoint by the time or regularly scheduled occupancy.
      b. The unit shall be in full 100% return air configuration during.
      c. When rooms are satisfied, the unit shall go into normal ventilation occupancy mode.
   2. Heating Mode: The heating coil control valve shall modulate to maintain discharge temperature setpoint.
   3. Cooling Mode: Outside air and return air dampers shall modulate to meet discharge air setpoint. The setpoint shall be adjusted based on the room with the highest cooling load demand. Supply air temperature shall not be below 60 degrees F.
   4. Demand Ventilation Control: During normal operating mode, the unit outside air volume shall be modulated as needed to maintain
      a. Cooling setpoint for free cooling.
      b. Maintain a positive building pressure of 0.05 inches w.c. (adjustable) inches.
      c. Carbon dioxide level below 800 parts per million (adjustable) as sensed at the RA duct. If the carbon dioxide level goes above 1,000 ppm (adjustable), an alarm shall be generated.

F. Fan Failure: If either fan fails, a critical alarm shall be generated and the unit shall go into unoccupied mode.

G. Building Pressurization: The return and relief air dampers shall modulate to maintain a positive building pressure of 0.05” w.c.
   1. If the building system pressure drops below positive 0.01” inches w.c. (adjustable), an alarm shall be generated.

H. Freeze Control: If the discharge air discharge temperature drops below 32 degrees, a freeze condition shall be generated, the fans shall shut down, outside and relief air dampers close, return dampers open, and the heating coil goes to full open. Low-temperature shut-down shall have an automatic reset function.

I. Filters: Each filter bank shall have a separate static pressure sensor. Maintenance alarm shall be generated when the static pressure across the filter bank rises above an adjustable setpoint.

J. Smoke Detection: Upon activation of the fire alarm system, the air handler shall shut down, and dampers fail to the unoccupied mode positions.

K. The following points shall be shown on the graphical user interface:

Points	Type	Alarm
Supply Fan Enable	MS/TP	-
Supply Fan Status	MS/TP	Critical
Return Fan Enable	MS/TP	-
Return Fan Status	MS/TP	Critical
Outside Air Temperature (One unit)	AI	-
Return Air Temperature	AI	-
Mixed Air Temperature	AI	-
Supply Air Temperature	AI	Maintenance, Freeze
Supply Air Temperature Setpoint	-	-
Heating Coil Valve (percent open)	AO	-
All Damper Positions (percent open)	AO	-
Filter differential pressures (Multiple)	AI	Maintenance
Building Pressure (in w.c.)	AI	Maintenance

3.5 REHEAT COILS

A. This section applies to those reheat coils which are to have new controls. If existing room temperature sensor is being reused, provide controls in accordance with existing sequence.

B. Control valves shall modulate as required to maintain room temperature setpoint.

C. If space temperature drops below 2 degrees (adjustable) of space temperature setpoint for 10 minutes, an alarm shall be generated.

D. The following shall be shown on the graphical user interface:

Points	Type	Alarm
Space Setpoint	-	-
Space Temperature	AI	Maintenance
Valve (percent open)	AO	-

3.6 UNIT HEATERS

A. This section applies to those unit heaters which are to have new controls. If existing room temperature sensor is being reused, provide controls in accordance with existing sequence.

B. Control valves shall modulate as required to maintain space temperature setpoint.

C. If space temperature drops below 2 degrees (adjustable) of space temperature setpoint for 10 minutes, an alarm shall be generated.

D. The following shall be shown on the graphical user interface:

Points	Type	Alarm
Space Setpoint	-	-
Space Temperature	AI	Maintenance
Valve (percent open)	AO	-

3.7 ADDITIVE ALTERNATE #2

A. The following items are to be included in Additive Alternate #2. The corresponding graphics and alarms are to be included with the alternate.

3.8 AIR HANDLING UNIT

A. Applies to:
1. Air Handling Unit AHU-12, 13, and 14

B. When outside air temperature rises above 60 degrees, and there is a call for cooling, the mechanical cooling system shall be engaged. The condensing unit shall operate in conjunction with the DX Coil to maintain discharge setpoint.

C. Upon failure of the condensing unit, a maintenance alarm shall be generated.

D. The following shall be shown on the graphical user interface:

Points	Type	Alarm
Condensing Unit Status	DI	Maintenance
Condensing Unit Enable	DO	-

3.9 ADDITIVE ALTERNATE #1

A. The following items are to be included in Additive Alternate #1. The corresponding graphics and alarms are to be included with the alternate.

3.10 GLYCOL HEATING LOOP

A. Applies to:
1. Heat Exchangers HX-1
2. Circulating Pumps P-4B and P-5B
3. Glycol Make-up Tanks GMT-1

B. The following shall be shown on the graphical user interface:

Points	Type	Alarm
Water Supply Temp	DI	-
Water Return Temp	DI	-
Glycol Return Temp	DI	-

END OF SECTION

PART 1 GENERAL

1.1 SUMMARY

A. Section Includes:
1. Testing adjusting and balancing of air systems.
2. Testing adjusting and balancing of hydronic systems.
3. Measurement of final operating condition of HVAC systems.

1.2 REFERENCES

A. Associated Air Balance Council:
1. AABC MN-1 - National Standards for Testing and Balancing Heating, Ventilating, and Air Conditioning Systems.

B. American Society of Heating, Refrigerating and Air-Conditioning Engineers:
1. ASHRAE 111 - Practices for Measurement, Testing, Adjusting and Balancing of Building Heating, Ventilation, Air-Conditioning and Refrigeration Systems.

C. Natural Environmental Balancing Bureau:
1. NEBB - Procedural Standards for Testing, Adjusting, and Balancing of Environmental Systems.

1.3 SUBMITTALS

A. Prior to commencing Work, submit proof of latest calibration date of each instrument.

B. Field Reports: Indicate deficiencies preventing proper testing, adjusting, and balancing of systems and equipment to achieve specified performance.

C. Prior to commencing Work, submit report forms or outlines indicating adjusting, balancing, and equipment data required. Include detailed procedures, agenda, sample report.

D. Submit draft copies of report for review prior to final acceptance of Project.

E. Furnish reports complete with set of reduced drawings with air outlets and equipment identified to correspond with data sheets, and indicating thermostat locations.

1.4 QUALIFICATIONS

A. Agency: Company specializing in testing, adjusting, and balancing of systems specified in this section with minimum three years documented experience certified by AABC or certified by NEBB.

1.5 SEQUENCING

A. Sequence balancing between completion of systems tested and Date of Substantial Completion.

PART 2 PRODUCTS

Not Used.

PART 3 EXECUTION

3.1 EXAMINATION

A. following:
1. Systems are started and operating in safe and normal condition.
2. Temperature control systems are installed complete and operable.
3. Proper thermal overload protection is in place for electrical equipment.
4. Final filters are clean and in place. If required, install temporary media in addition to final filters.
5. Duct systems are clean of debris.
6. Fans are rotating correctly.
7. Fire and volume dampers are in place and open.
8. Air coil fins are cleaned and combed.
9. Access doors are closed and duct end caps are in place.
10. Air outlets are installed and connected.
11. Duct system leakage is minimized.
12. Hydronic systems are flushed, filled, and vented.
13. Pumps are rotating correctly.
14. Proper strainer baskets are clean and in place or in normal position.
15. Service and balancing valves are open.

3.2 PREPARATION

A. Furnish instruments required for testing, adjusting, and balancing operations.

B. Make instruments available to Architect/Engineer to facilitate spot checks during testing.

3.3 INSTALLATION TOLERANCES

A. Air Handling Systems: Adjust to within plus or minus 5 percent of design.

B. Air Outlets and Inlets: Adjust outlets and inlets in space to within plus or minus 10 percent of design.

C. Hydronic Systems: Adjust to within plus or minus 10 percent of design.

3.4 ADJUSTING

A. Verify recorded data represents actual measured or observed conditions.

B. Permanently mark settings of valves, dampers, and other adjustment devices allowing settings to be restored. Set and lock memory stops.

C. After adjustment, take measurements to verify balance has not been disrupted. If disrupted, verify correcting adjustments have been made.

D. Report defects and deficiencies noted during performance of services, preventing system balance.

E. Leave systems in proper working order, replacing belt guards, closing access doors, closing doors to electrical switch boxes, and restoring thermostats to specified settings.

F. At final inspection, recheck random selections of data recorded in report. Recheck points or areas as selected and witnessed by Owner.

G. Check and adjust systems approximately six months after final acceptance and submit report.

3.5 AIR SYSTEM PROCEDURE

A. Adjust air handling and distribution systems to obtain required or design supply, return, and exhaust air quantities.

B. Make air quantity measurements in main ducts by Pitot tube traverse of entire cross sectional area of duct.

C. Measure air quantities at air inlets and outlets.

D. Adjust distribution system to obtain uniform space temperatures free from objectionable drafts.

E. Use volume control devices to regulate air quantities only to extent adjustments do not create objectionable air motion or sound levels. Effect volume control by using volume dampers located in ducts.

F. Vary total system air quantities by adjustment of fan speeds. Provide sheave drive changes to vary fan speed. Vary branch air quantities by damper regulation.

G. Provide system schematic with required and actual air quantities recorded at each outlet or inlet.

H. Measure static air pressure conditions on air supply units, including filter and coil pressure drops, and total pressure across fan. Make allowances for 50 percent loading of filters.

I. Adjust outside air automatic dampers, outside air, return air, and exhaust dampers for design conditions.

J. Measure temperature conditions across outside air, return air, and exhaust dampers to check leakage.

K. At modulating damper locations, take measurements and balance at extreme conditions.

3.6 WATER SYSTEM PROCEDURE

A. Adjust water systems, after air balancing, to obtain design quantities.

B. Use calibrated Venturi tubes, orifices, or other metered fittings and pressure gauges to determine flow rates for system balance. Where flow-metering devices are not installed, base flow balance on temperature difference across various heat transfer elements in system.

C. Adjust systems to obtain specified pressure drops and flows through heat transfer elements prior to thermal testing. Perform balancing by measurement of temperature differential in conjunction with air balancing.

D. Effect system balance with automatic control valves fully open or in normal position to heat transfer elements.

E. Effect adjustment of water distribution systems by means of balancing cocks, valves, and fittings. Do not use service or shut-off valves for balancing unless indexed for balance point.

F. Where available pump capacity is less than total flow requirements or individual system parts, simulate full flow in one part by temporary restriction of flow to other parts.

3.7 SCHEDULES

A. Equipment Requiring Testing, Adjusting, and Balancing:
1. HVAC Pumps.
2. Air Coils.
3. Air Handling Units.
4. Air Inlets and Outlets.
5. Heat Exchangers.

END OF SECTION

PART 1 GENERAL

1.1 SECTION INCLUDES

A. Basic Electrical Requirements specifically applicable to Division 16 Sections, in addition to Division 1 – General Requirements.

1.2 SCOPE

A. Furnish all labor, materials, equipment, and supervision of labor and performance of all operations required for work shown on E drawings and coordinating with other Divisions.

1.3 REFERENCES

A. International Building Code:
   1. IBC, latest adopted edition.

B. National Fire Protection Association:
   1. NFPA 70 – National Electrical Code, latest adopted edition.

C. Underwriters Laboratories Incorporated:
   1. UL 50 – Enclosures for Electrical Equipment.

1.4 REGULATORY REQUIREMENTS

A. Conform to International Building Code, latest adopted edition, with Municipality of Anchorage amendments.

B. Electrical: Conform to NFPA 70, latest published edition, with Municipality of Anchorage amendments.

C. Coordinate obtaining permits with DHSS, and request inspections from authority having jurisdiction.

D. Furnish products listed and classified by Underwriters Laboratories, Inc. as suitable for purpose specified and shown.

1.5 SUBMITTALS AND APPROVALS

A. Submit under provisions of Division 1 and Division 16.

B. Proposed Products List: Products required to be submitted in the individual Sections which follow.

C. Prior to the purchase or ordering of any materials or equipment, submit for approval complete data describing all items intended for use in the Work. Include the item's manufacturer, identifying number or nomenclature, and other information as necessary to describe the item.

Also include the manufacturer's published data describing each items size, capacity, performance, and power requirements. The number of copies to be submitted and the number of copies returned with actions noted is as specified in the General and/or Special Conditions. Provide certification stating that the material has been reviewed by the Contractor and that all items conform to the Contract requirements. Submittals made without such certification will be returned unreviewed. This certification shall be in the form of a stamp on each material item submitted and signed or initialed. The name of the certifier shall be typed or legibly printed in or near the stamp.

D. At the DHSS Project Manager's option, partial submittals which encompass less than a single section will be returned unreviewed or held unreviewed until the submittal is complete.

E. When substitute equipment is proposed, clearly and unambiguously mark submitted material describing the substitute to identify the differences between the qualities and characteristics of the offered substitute and the specified material. Failure to provide this identification of differences when substitutes are submitted for consideration will result in rejection of the proposed material.

F. When equipment substitutions are approved and that equipment alters the design or space requirements indicated on the plans, pay for all items of cost for the revised design and construction including costs of other trades involved and any engineering required to incorporate the approved substituted equipment into the Project. Owner shall not pay for the required additional costs.

G. Material and equipment installed, purchased, furnished, or provided for the Project which has not been submitted and reviewed by the DHSS Project Manager may be ordered removed and acceptable material and equipment installed in its place at no additional cost to the Owner.

H. Pay the Owner's complete costs (including the services of technical, professional, and other staff employed by or functioning at the DHSS Project Manager's request under other contracts with the Owner) for review of submittals due to the failure to submit materials which comply with the provisions of the Contract Documents within two submittals for each equipment type or item. Reviews in addition to the initially submitted material and one subsequent review of resubmitted material shall be paid for by the Contractor.

1.6 PRODUCT DELIVERY, STORAGE, AND HANDLING

A. All material shall be new, unused, and delivered to the job site packed in their original containers.

B. All material shall be delivered free of damage or defects.

C. Provide adequate storage facilities at the Project Site or other approved location to protect materials from damage or corrosion. Coordinate with other trades to limit storage to designated areas as approved by the DHSS Project Manager.

D. Protect material, equipment, and apparatus provided under this Division from damage, water, and dust, both in storage and after installation, until Notice of Completion has been filed. Materials, equipment, or apparatus damaged because of improper storage or protection will be rejected and must be removed from the site.

1.7 PROJECT/SITE CONDITIONS

A. Provide Work in locations shown on Drawings, unless prevented by Project conditions.

B. Prepare drawings showing proposed rearrangement of Work to meet Project conditions, including changes to Work specified in other Sections. Obtain permission of DHSS Project Manager before proceeding.

C. Visit the site and verify conditions related to this Work and obtain any information necessary to submit an intelligent and conclusive bid. No allowance will be made on behalf of the Contractor for any claims for additional compensation due to failure to verify Site conditions.

1.8 DRAWINGS

A. Drawings are diagrammatic and not intended to show exact details.

B. Field verify all scales and dimensions shown on the plans. Final locations, distances, and levels shall be governed by actual field conditions.

C. Review and coordinate this Work with architectural, structural, plumbing, heating, ventilating, and all other Drawings and Specifications and adjust this Work as required to be compatible with all conditions indicated.

D. The Drawings show the general locations of the electrical features only except for features specifically dimensioned. When necessary to present a symmetrical appearance or to avoid interference with other installations, make minor relocations as required. The Drawings and Specifications are complementary to each other. What is shown on one is binding as if called for in both.

E. Promptly bring to the attention of the DHSS Project Manager for a decision, discrepancies among different Drawings or between Drawings and actual field conditions or Specifications.

1.9 DEFINITIONS

A. DHSS – Department of Health and Social Services

B. Furnish - Means purchase and bring to the Job Site.

C. Install - Means incorporate into the Work, including connections and make operational.

D. Provide - Means furnish, install, connect, and make operational.

E. Work or Project - Shall mean all Work required by the Contract Agreement.

F. DHSS Project Manager – Owners representative.

G. "All" and "Typical" are implied throughout the Specifications and Drawings and are not repeated in every instance.

PART 2 PRODUCTS

2.1 Provide materials and equipment of major and reputable manufacturers with ability to render competent and thorough service through local organizations capable of expeditiously providing service, parts, and assistance. All products provided in this Project shall have at least one representative authorized by the manufacturer of the product permanently based within the State of Alaska, or the manufacturer shall certify that service of his product is available within 24 hours at the Project Site after initial request for service.

2.2 In addition to specified material and equipment, provide all incidental materials required to provide complete installation. Such incidental materials include but are not limited to solders, tapes, caulking, mastics, gaskets, and other appurtenances as required.

2.3 Materials of similar nature, style, function, purpose and/or appearance shall be like products from the standard product line of the same manufacturer. All products shall be the standard catalog item successfully furnished and used by the manufacturer for a minimum of three years prior to bid opening.

2.4 Provide products listed by Underwriters' Laboratories for their intended use and location in all cases where UL lists such products.

2.5 Equipment shall be installed using the accessories available from the equipment manufacturer for the application with the selected accessories with the submittal data. Where accessories are not available from the manufacturer and other accessories are proposed for use, submit all proposed installation accessories with equipment submittal. Indicate mounting arrangements using drawings and descriptions. Equipment and proposed accessories shall be listed or independently certified (in accordance with previous paragraph) suitable for the application when completely installed.

2.6 Provide materials and equipment suitable for operation throughout the range of temperatures and other ambient conditions likely to be encountered. Provide components of equipment, including but not limited to, construction materials, supports, hangers, insulation, lubricants, pulling compounds, sealing mixtures, finishes, electrical and electronic components suitable for the anticipated operating ambient temperature range.

2.7 Do not store, install, test, operate, or transport any material, component or equipment at any temperature that results in damage, shortened useful life, or reduced reliability.

PART 3 EXECUTION

3.1 CLEANING

A. Clear away all debris, surplus materials, etc., resulting from this Work and operations, leaving the entire Project and all equipment in a clean, functional, and first-class condition.

B. Exterior surfaces of all new and modified electrical equipment enclosures shall be wiped or vacuum-cleaned to remove construction debris and dust.

C. Interiors of all new and modified electrical equipment enclosures, fixtures, closets, etc., shall be cleaned to remove construction debris and dust.

D. Vacuum-clean accessible elements of disconnecting and protective devices of equipment and the like prior to energizing.

E. All materials, enclosures, interiors of enclosures, and all other surfaces shall be left dry and show no evidence of watermarks, staining, or rust.

F. Clean all surfaces including but not limited to lamps, trims, reflectors, louvers, refractors, lenses, device plates, etc. Remove all fingerprints, temporary labels, etc. from surfaces of all lighting fixtures, equipment, enclosures, building elements, etc.

END OF SECTION

[This page intentionally left blank.]

PART 1 GENERAL

1.1 SECTION INCLUDES

A. Equipment grounding conductors.

B. Bonding.

1.2 REFERENCES

A. Institute of Electrical and Electronics Engineers:
1. IEEE 142 – Recommended Practice for Grounding of Industrial and Commercial Power Systems.

B. National Electrical Contractors Association:
1. NECA 1 – Standard Practice for Good Workmanship in Electrical Contracting.

C. National Fire Protection Association:
1. NFPA 70 – National Electrical Code, latest adopted edition.

1.3 QUALIFICATIONS

A. Manufacturer: Company specializing in manufacturing products specified in this section with minimum three years documented experience.

1.4 QUALITY ASSURANCE

A. Perform Work in accordance with NECA 1 - Standard Practice for Good Workmanship in Electrical Contracting.

1.5 DESIGN REQUIREMENTS

A. Grounding locations and installation: NFPA 70.

1.6 COORDINATION

A. Coordinate Work under provisions of Division 1 and Division 16.

B. Determine and maintain required separation between grounding conductors and other work.

C. Determine and provide grounding locations to avoid interference with other work.

PART 2 PRODUCTS

2.1 WIRE

A. Material: Insulated copper conductor.

B. Equipment Grounding Conductor: Size to meet NFPA 70 requirements.

PART 3 EXECUTION

3.1 INSTALLATION

A. Ground and bond electrical systems to meet Regulatory Requirements.

B. Equipment Grounding Conductor: Provide separate, insulated conductor within every feeder and branch circuit raceway. Terminate each end on suitable lug, bus, or bushing.

3.2 FIELD QUALITY CONTROL

A. Inspect grounding and bonding system conductors and connections for tightness and proper installation.

B. Verify continuity of each grounding and bonding conductor.

END OF SECTION

PART 1 GENERAL

1.1 SECTION INCLUDES

A. Conduit and equipment supports.

B. Anchors and fasteners.

1.2 RELATED SECTIONS

A. Section 16010 – Basic Electrical Requirements.

1.3 REFERENCES

A. National Electrical Contractors Association:
   1. NECA 1 – Standard Practice for Good Workmanship in Electrical Contracting.

B. National Electrical Manufacturer's Association:
   1. NEMA OS 1-2002 – Sheet-Steel Outlet Boxes, Device Boxes, Covers, and Box Supports.

C. National Fire Protection Association:
   1. NFPA 70 – National Electrical Code, latest adopted edition.

1.4 REGULATORY REQUIREMENTS

A. Conform to requirements of NFPA 70, latest adopted edition.

B. Provide products listed and classified by Underwriters Laboratories, Inc. as suitable for purpose specified and shown.

1.5 QUALIFICATIONS

A. Manufacturer: Company specializing in manufacturing products specified in this section with minimum three years documented experience.

1.6 QUALITY ASSURANCE

A. Perform Work in accordance with NECA 1 - Standard Practice for Good Workmanship in Electrical Contracting.

1.7 PROJECT CONDITIONS

A. Verify locations of equipment to be supported prior to rough-in.

1.8 DESIGN REQUIREMENTS

A. Support locations and installation: NFPA 70.

1.9 DELIVERY, STORAGE, AND HANDLING

A. Deliver, store, protect, and handle products to site under provisions of Division 1 and Division 16.

B. Accept supports, channels, and accessories on site. Inspect for damage.

C. Protect support channels and accessories from corrosion and entrance of debris by storing above grade. Provide appropriate covering.

1.10 COORDINATION

A. Coordinate Work under provisions of Division 1 and Division 16.

B. Determine and maintain required separation between supports and other work.

C. Determine and provide support locations to avoid interference with other work.

PART 2 PRODUCTS

2.1 PRODUCT REQUIREMENTS

A. Materials and Finishes: Provide adequate corrosion resistance.

B. Provide materials, sizes, and types of anchors, fasteners, and supports to carry the loads of equipment and conduit. Include weight of wire in conduit when selecting products.

C. Anchors and Fasteners:
1. Concrete Structural Elements: Use expansion anchors.
2. Steel Structural Elements: Use beam clamps.
3. Concrete Surfaces: Use self-drilling anchors or expansion anchors.
4. Hollow Masonry, Plaster, and Gypsum Board Partitions: Use toggle bolts or hollow wall fasteners.
5. Solid Masonry Walls: Use expansion anchors.
6. Sheet Metal: Use sheet metal screws.
7. Wood Elements: Use wood screws.

2.2 STEEL CHANNEL

A. Description: Galvanized or Painted steel.

2.3 BEAM CLAMPS

A. Description: Cast steel with 1/4 inch, minimum threaded hole on two sides.

PART 3 EXECUTION

3.1 INSTALLATION

A. Provide products in accordance with manufacturer's instructions.

B. Provide anchors, fasteners, and supports in accordance with NECA 1 - Standard Practice for Good Workmanship in Electrical Contracting.

C. Do not fasten supports to pipes, ducts, mechanical equipment, or conduit.

D. Do not use spring steel clips and clamps.

E. Do not use powder-actuated anchors.

F. Do not drill or cut structural members.

G. Fabricate supports from structural steel or steel channel. Rigidly weld members or use hexagon head bolts, lock washers and nuts, to present neat appearance with adequate strength and rigidity.

H. Use spring type lock washers under all nuts.

I. In wet and damp locations use corrosion resistant steel channel supports to stand equipment one inch off wall.

END OF SECTION

[This page intentionally left blank.]

PART 1 GENERAL

1.1 SECTION INCLUDES

A. Nameplates and labels.

B. Wire markers.

1.2 REFERENCES

A. National Fire Protection Association:
1. NFPA 70 – National Electrical Code, latest adopted edition.

1.3 REGULATORY REQUIREMENTS

A. Conform to requirements of NFPA 70, latest adopted edition.

B. Furnish products listed and classified by Underwriters Laboratories, Inc. as suitable for purpose specified and shown.

1.4 QUALIFICATIONS

A. Manufacturer: Company specializing in manufacturing products specified in this Section with minimum three years documented experience.

1.5 QUALITY ASSURANCE

A. Perform Work in accordance with NECA 1 - Standard Practice for Good Workmanship in Electrical Contracting.

1.6 DELIVERY, STORAGE, AND HANDLING

A. Deliver, store, protect, and handle products to site under provisions of Division 1 and Division 16.

B. Accept equipment accessories on site. Inspect for damage.

C. Protect equipment and accessories damage by storing above grade. Provide appropriate covering.

1.7 COORDINATION

A. Coordinate Work under provisions of Division 1 and Division 16.

PART 2 PRODUCTS

2.1 NAMEPLATES AND LABELS

A. Nameplates: Engraved three-layer laminated plastic, black letters on white background to match existing.

1. Provide nameplates for all new:
   a. Mechanical equipment disconnect/starters.
   b. Panel name or equipment name in ¼" letters.
2. Panelboards
   a. "SUPPLIED FROM PANEL_____". Other: "CIRCUIT XXX-##"
3. Enclosed circuit breakers.

B. Labels: Clear adhesive Mylar or plastic type, with black letters by a Kroy or similar lettering type device.
   1. Provide labels for all new:
      a. Receptacles
      b. Lighting
      c. Data Jacks
   2. Minimum 3/16 inch

2.2 WIRE MARKERS

A. Description: Machine printed self-adhesive wire markers.

B. Locations: Each new or re-used conductor at panelboard gutters, pull, outlet and junction boxes, motor controllers, disconnects, and each load connection.

C. Legend:
   1. Power Circuits: Panelboard number and branch circuit number.

PART 3 EXECUTION

3.1 PREPARATION

A. Degrease and clean surfaces to receive nameplates and labels.

3.2 APPLICATION

A. Install nameplates and labels parallel to equipment lines.

B. Secure nameplate to equipment front using screws, rivets, or epoxy.

C. Provide new panel schedules including new circuit identification and information.

END OF SECTION

PART 1 GENERAL

1.1 SECTION INCLUDES

A. Electrical demolition.

1.2 RELATED SECTIONS

A. Division 1 – General Requirements.

B. Section 16010 – Basic Electric Requirements.

1.3 DESCRIPTION

A. Electrical demolition consists of:
   1. Removal of existing work, materials, and items as required by Project area conditions, and as scheduled and specified, to accomplish new and alteration work.
   2. Patching all existing surfaces that are disturbed, damaged, or otherwise made defective in appearance or function by the execution of the demolition.
   3. Removal and disposal of materials and debris resulting from the demolition.

PART 2 PRODUCTS

2.1 MATERIALS AND EQUIPMENT

A. Materials and equipment for patching and extending work: As specified in individual Sections.

2.2 DISPOSITION OF MATERIALS

A. DHSS to get first right of refusal of all demolished equipment.

B. Store all materials and equipment salvaged for the DHSS Project Manager on Site in the Contractor's approved work and storage area or off site in a storage area approved by the DHSS Project Manager.

C. Remove debris resulting from demolition operation from site on regular basis. No accumulation of debris is permitted.

D. The burning of debris on Site is forbidden.

E. See Division 1 and HazMat Drawings and Specifications for the storage, transportation, and disposal of all hazardous waste materials generated from this Work.

PART 3 EXECUTION

3.1 EXAMINATION

A. Demolition Drawings are based on field observation and existing record documents. Report discrepancies to DHSS Project Manager before disturbing existing installations.

B. Verify dimensions, locations, circuiting arrangement, and all conditions prior to start of demolition.

C. Notify DHSS Project Manager in writing, of any failed or damaged existing equipment prior to start of work.

D. Beginning demolition means the Contractor accepts the existing conditions, no additional compensation will be provided for unknown conditions that were not identified prior to start of work.

3.2 PREPARATION

A. Disconnect electrical systems in all walls, floors, and ceilings that are scheduled for demolition.

B. Provide temporary wiring and connections to maintain existing systems in service during construction. When work on energized equipment or circuits, must be performed, use personnel experienced in such operations.

C. Existing Electrical Service: Maintain existing system in service until new system is complete and ready for service. Disable system only to make switchovers and connections. Minimize outage duration. Make temporary connections to maintain services in operation in areas adjacent to work area, where outages are approved.

D. Outages: Notify DHSS project manager in writing at least 24 hours before performing any power outages. Contractor shall make every reasonable effort to limit outages and perform outages during off times as determined by DHSS.

E. Existing Fire Alarm System: Maintain existing system in service during construction.

3.3 INSTALLATION

A. Provide complete installation of relocated materials and equipment under the provisions of Division 1 and Division 16 and as shown on the Drawings.

3.4 PERFORMANCE OF WORK

A. Restore all work damaged or otherwise made defective in appearance or function by the execution of required Work to original condition. Interference with Owner's use of existing building and facilities shall be kept to a minimum and all work resulting in such interference shall be performed at a time approved by DHSS Project Manager prior to such interfering activities.

B. Remove all work carefully and only to the extent required to conform with the requirements to perform the Work. Remove all loose or damaged materials caused by demolition or noted or specified to be removed.

C. Carefully remove any materials and equipment noted or specified to be reused or salvaged and handle with care to avoid damage.

D. After demolition work in any area is completed, the Contractor shall clean all floors, walls, ceilings, etc. marred by demolition, before any new construction is started.

E. Restoration of Existing Work:
   1. Restore any damage to Owner's property due to the Work to its original condition or replace in a manner satisfactory to the DHSS Project Manager.
      a. Where restoration is indicated or required, such work shall be corrected to the extent that all materials and workmanship are congruous with existing.

3.5 DEMOLITION AND EXTENSION OF EXISTING ELECTRICAL WORK

A. Demolish and extend existing electrical work under provisions of Division 1 and Division 16 and as indicated on the Drawings.

B. Remove, relocate, and extend existing installations to accommodate new construction.

C. Disconnect and remove electrical devices and equipment serving utilization equipment that has been removed.

D. Maintain access to existing electrical installations that remain energized. Modify installations or provide access panels. Maintain NEC required clearances.

E. Extend existing installations using materials and methods compatible with existing electrical installations, or as specified in individual Sections.

3.6 CLEANING AND REPAIR

A. Clean and repair existing materials and equipment that are to be reused.

B. Panelboards: Provide typed circuit directory showing revised circuiting arrangement. Provide closure plates for unused breaker and raceway openings.

C. Do not reuse any material and/or equipment unless specifically called out on design drawings, specifications or without approval from DHSS Project Manager.

D. Existing surfaces damaged during installation shall be repaired and refinished (in finished areas) to match original installation. If matching materials are not available, provide alternative finish acceptable to DHSS.

E. Surface raceways and devices installed on existing surfaces shall be painted to match existing surface, unless otherwise approved by DHSS.

3.7 PROTECTION

A. Protect existing buildings and adjacent surfaces, features, and property.

B. Take adequate precautions to protect the Owner's property from damage during demolition work, moving of debris and damage by the elements.

C. Provide and maintain suitable barricades, shelters, lights, and danger signals during the progress of the demolition. Barricades, shelters, lights, and danger signals shall meet the requirements of the state and/or local OSHA, and building codes. Assume responsibility for barriers until the completion of Contract and remove same.

D. Existing damage to property prior to construction must be noted, in writing, and submitted to the DHSS Project Manager before work in the area begins.

END OF SECTION

PART 1 GENERAL

1.1 SECTION INCLUDES

A. Building wire and cable.

B. Wiring connectors and connections.

1.2 REFERENCES

A. National Electrical Contractors Association:

1. NECA 1 – Standard Practice for Good Workmanship in Electrical Contracting.

B. International Electrical Testing Association:

1. NETA ATS – Acceptance Testing Specifications for Electrical Power Distribution Equipment and Systems, latest published edition.

C. National Fire Protection Association:

1. NFPA 70 – National Electrical Code, latest published edition.

1.3 REGULATORY REQUIREMENTS

A. Conform to requirements of NFPA 70, latest published edition.

B. Provide products listed and classified by Underwriters Laboratories, Inc. as suitable for purpose specified and shown.

1.4 QUALIFICATIONS

A. Manufacturer: Company specializing in manufacturing products specified in this Section with minimum three years documented experience.

1.5 QUALITY ASSURANCE

A. Perform Work in accordance with NECA 1 - Standard Practice for Good Workmanship in Electrical Contracting.

1.6 PROJECT CONDITIONS

A. Verify in field that dimensions shown on Drawings are reasonably accurate.

B. In general, Wire and cable routing shown on Drawings is diagrammatic only, however specific areas to route conductors are shown. Route wire and cable as required to meet Project Conditions.

C. Determine exact routing and lengths required.

1.7 DESIGN REQUIREMENTS

A. Building wire and cable sizes: ANSI/NFPA 70.

B. Conductors shall be copper.

1.8 SUBMITTALS

A. VFD CABLE:

1. Submit under provisions of Division 1 and Division 16.

2. Product Data: Provide manufacturer's catalog information showing cable diameter and weight, colors, impedance, inductance, capacitance, temperature range, and minimum bending radius.

1.9 DELIVERY, STORAGE, AND HANDLING

A. Deliver, store, protect, and handle products to site under provisions of Division 1 and Division 16.

B. Accept wire and cable on site. Inspect for damage.

C. Protect wire and cable from corrosion and damage by storing above grade. Provide appropriate covering.

1.10 COORDINATION

A. Coordinate Work under provisions of Division 1 and Division 16.

PART 2 PRODUCTS

2.1 BUILDING WIRE AND CABLE

A. Feeders and Building Wiring: Minimum size wire permitted shall be #12 AWG, 98 percent conductivity copper, 600 volt insulation, THW, THHN, XHHW. Provide 90 deg. C insulation for conductors serving outlets above convector covers and other locations where wiring is installed in close proximity (less than 6" clearance) to hot surfaces such as radiant heaters, boilers, water heaters, and flues.

B. Branch Circuit Wiring: Conductors: #12 AWG minimum.

C. Exterior and Underground Wiring: XHHW or XHHW-2 only.

D. VFD Cable: Use multi conductor, 1000V, Black, Capacitance less than 30pF/ft., UL flexible motor supply cable designed specifically for use with AC motor drives. Basis of design is Belden #29502 VFD Cable; substitutes may be submitted for approval and shall be of equal or greater quality.

E. Conducting material for all wiring shall be copper.

F. Fixture wireways and other high temperature areas: THHN or XHHW 90 deg. C.

G. Provide solid or stranded conductors for #12 AWG and solid conductors for sizes smaller than #12 AWG.

H. All wiring outside of heated structures shall have XHHW or XHHW-2 insulation.

I. All wiring for applications in systems operating at less than 120 volts line to neutral shall have insulation approved for installation without raceways in air plenums.

2.2 WIRING CONNECTORS

A. Compression or Screw Tight Connectors:

1. Ideal.

2. Scotchlok.

3. Substitutions: Under provisions of Division 1 and Division 16.

PART 3 EXECUTION

3.1 EXAMINATION

A. Verify that mechanical work likely to damage wire and cable has been completed.

B. Verify that raceway installation is complete and supported.

3.2 INSTALLATION

A. Use wiring methods indicated on Drawings and in Specifications.

B. Use stranded conductors for control circuits.

C. Provide wire markers for each conductor. See Section 16075.

D. Run all wires and cables in raceways. Raceways shall be completed prior to installation of conductors and cables.

E. Pull all conductors into raceway at same time. Carefully pull wires to insure that insulation is not damaged.

F. Provide j-boxes and pull boxes as needed for complete installation. Boxes shall be sized based on NEC required bending radiuses.

G. Allow at least 6 inches of conductor in boxes after splices and connections are made.

H. Provide all wire and cable in specified raceways conforming to NEC. Do not exceed NEC fill limits.

I. Splice only in accessible junction or outlet boxes.

J. Clean conductor surfaces before installing lugs and connectors.

K. Make splices, taps, and terminations to carry full ampacity of conductors with no perceptible temperature rise.

L. Color code line voltage conductors with insulation of continuous color to designate neutral conductor, phase (ungrounded) and ground wires (if insulated) per tables following:

1. 208Y/120 Volt, 3 phase, 4 wire:

Phase A	Phase B	Phase C	Neutral	Ground (if insulated)
Black	Red	Blue	White	Green

M. Provide connections to circuit breakers, terminal strips, switches, and other devices as follows:

1. #12 AWG Wire: Formed around binding post or screw.

2. #10 AWG Wire: Buchanan "Termend" lugs, Burndy or equal.

3. Stranded conductors #12 AWG and smaller shall be terminated with crimp on ring or spade lugs on screw terminal.

N. Provide conductor lengths to minimize joints and splices.

3.3 FIELD QUALITY CONTROL

A. Perform field testing under provisions of Division 1 and Division 16.

B. Inspect wire and cable for physical damage and proper connection.

C. Measure tightness of bolted connections and compare torque measurements with manufacturer's recommended values.

D. Verify continuity of each branch circuit conductor.

END OF SECTION

PART 1 GENERAL

1.1 SECTION INCLUDES

A. Flexible metal conduit.

B. Electrical metallic tubing.

C. Galvanized rigid conduit.

D. Fittings and conduit bodies.

E. Wall and ceiling outlet boxes.

F. Pull and junction boxes.

1.2 REFERENCES

A. American National Standards Institute:
   1. ANSI C80.3 – Electrical Metallic Tubing, Zinc Coated, Specification for.

B. National Electrical Contractors Association:
   1. NECA 1 – Standard Practices for Good Workmanship in Electrical Contracting.

C. National Electrical Manufacturer's Association:
   1. NEMA 250 – Enclosures for Electrical Equipment (1000 Volts Maximum).
   2. NEMA FB 1 – Fittings, Cast Metal Boxes, and Conduit Bodies for Conduit, Electrical Metallic Tubing, and Cable Assemblies.
   3. NEMA OS 1 – Sheet-Steel Outlet Boxes, Device Boxes, Covers, and Box Supports.

D. National Fire Protection Association:
   1. NFPA 70 – National Electrical Code, latest adopted edition.

E. Underwriters Laboratories Incorporated:
   1. UL6 – Electrical Rigid Metal Conduit — Steel.

1.3 REGULATORY REQUIREMENTS

A. Conform to requirements of NFPA 70, latest adopted edition.

B. Furnish products listed and classified by Underwriters Laboratories, Inc. as suitable for purpose specified and shown.

1.4 QUALIFICATIONS

A. Manufacturer: Company specializing in manufacturing products specified in this Section with minimum three years documented experience.

1.5 QUALITY ASSURANCE

A. Perform Work in accordance with NECA 1 - Standard Practice for Good Workmanship in Electrical Contracting.

1.6 PROJECT CONDITIONS

A. Verify in the field that dimensions shown on Drawings are reasonably accurate.

B. Verify routing and locations of conduit terminations prior to rough-in.

C. Verify locations of boxes and outlets in work areas prior to rough-in.

D. In general, conduit routing shown on Drawings is diagrammatic only, however specific areas to route conduits are shown. Route as required to complete wiring system.

1.7 DELIVERY, STORAGE, AND HANDLING

A. Deliver, store, protect, and handle products to site under provisions of Division 1 and Division 16.

B. Accept raceways and boxes on site. Inspect for damage.

C. Protect raceways and boxes from corrosion and entrance of debris by storing above grade. Provide appropriate covering.

1.8 COORDINATION

A. Coordinate Work under provisions of Division 1 and Division 16.

B. Determine and maintain required separation between conduits and other work.

C. Determine and provide conduit locations to avoid interference with other work.

PART 2 PRODUCTS

2.1 CONDUIT REQUIREMENTS

A. Minimum Size:
1. 1/2 inch diameter unless otherwise specified.
2. Surface conduits permitted in all utility areas, including the sub floor utility space.

B. Dry Locations (To include sub-floor utility space):
1. Concealed: Use electrical metallic tubing.
2. Exposed: Use electrical metallic tubing.
3. Connections to equipment to reduce vibration: Flexible metal conduit shall be used.

C. Exterior Locations:
1. Concealed: Use galvanized rigid conduit
2. Exposed: Use galvanized rigid conduit.
3. Underground: Use galvanized rigid conduit.

2.2 FLEXIBLE METAL CONDUIT

A. Description: Interlocked steel construction.

B. Fittings: ANSI/NEMA FB 1.

2.3 ELECTRICAL METALLIC TUBING (EMT)

A. Description: ANSI C80.3; galvanized tubing.

B. Fittings and Conduit Bodies: ANSI/NEMA FB 1; steel compression type or screw type.

2.4 GALVANIZED RIGID CONDUIT (GRC)

A. Description: ANSI C80.1

B. Rigid Conduit fittings and Conduit Bodies: Cast Steel to match conduit.

2.5 OUTLET BOXES

A. Sheet Metal Outlet Boxes: ANSI/NEMA OS 1, galvanized steel.
1. Equipment Supporting Boxes: Four inch octagon boxes rated for weight of equipment supported; include 1/2 inch male fixture studs where required. Provide additional supports and boxes for large fixtures per NEC.

B. Provide minimum four inch square boxes except where smaller units are required by equipment.

C. Surface Mounted: Four inch square, minimum. Surface boxes permitted in the sub floor utility area and other utility areas, i.e. mechanical or electrical rooms.

2.6 PULL BOXES AND JUNCTION BOXES

A. Surface Mounted Pull Boxes and Junction Boxes: Metal construction, conforming to National Electrical Code requirements, with screw-on cover.

PART 3 EXECUTION

3.1 INSTALLATION

A. Install conduit in accordance with NECA 1 - Standard Practice for Good Workmanship in Electrical Contracting.

B. Paint all exposed conduit in finished spaces to match adjacent wall color.

C. Arrange supports to prevent misalignment during wiring installation.

D. Support conduit using coated steel or malleable iron straps, lay-in adjustable hangers, clevis hangers, and split hangers.

E. Fasten conduit supports to building structure and surfaces under provisions of Section 16070.

F. Label junction boxes and conduits with indelible ink indicating circuit and panel numbers under provisions of Section 16075.

G. Do not permanently support conduit with wire or perforated pipe straps. Remove wire used for temporary supports

H. Do not attach conduit to ceiling support wires.

I. Arrange conduit to maintain headroom and present neat appearance.

J. Route exposed conduit parallel and perpendicular to walls.

K. Route conduit installed above accessible ceilings parallel and perpendicular to walls.

L. Maintain adequate clearance between conduit and piping. Maintain 12 inch clearance between conduit and surfaces with temperatures exceeding 104 degrees F.

M. Cut conduit square, de-burr cut ends.

N. Bring conduit to shoulder of fittings; fasten securely.

O. Provide no more than equivalent of four 90-degree bends between boxes. Use conduit bodies to make sharp changes in direction, as around beams.

P. Avoid moisture traps; provide junction box with drain fitting at low points in conduit system.

Q. Ground and bond conduit under provisions of Section 16060.

R. All installations not true with respect to building lines or otherwise improperly installed shall be corrected and/or removed and completely reinstalled properly, at the discretion of the DHSS Project Manager, at no cost to the Owner.

S. Provide electrical boxes to maintain headroom and to present neat mechanical appearance.

T. Provide pull boxes and junction boxes above accessible ceilings and in unfinished areas only.

U. Provide support for boxes independent of conduit.

3.2 CLEANING

A. Clean under provisions of Division 1 and Division 16.

B. Clean electrical parts to remove conductive and harmful materials.

C. Remove dirt and debris from new and reused enclosures.

D. Clean finishes and touch-up damage.

END OF SECTION

[This page intentionally left blank.]

PART 1 GENERAL

1.1 RELATED DOCUMENTS

A. Drawings and general provisions of the Contract, including General and Supplementary Conditions and Division 01 Specification Sections, apply to this Section.

1.2 SUMMARY

A. Section includes separately enclosed, preassembled, combination VFDs with bypass starters, rated 600 V and less, for speed control of three-phase, squirrel-cage induction motors.

1.3 DEFINITIONS

A. CPT: Control power transformer.

B. DDC: Direct digital control.

C. EMI: Electromagnetic interference.

D. LED: Light-emitting diode.

E. NC: Normally closed.

F. NO: Normally open.

G. OCPD: Overcurrent protective device.

H. PID: Control action, proportional plus integral plus derivative.

I. RFI: Radio-frequency interference.

J. VFD – Variable Frequency Drive

1.4 ACTION SUBMITTALS

A. Product Data: For each type and rating of VFD indicated.
   1. Include dimensions and finishes for VFDs.
   2. Include rated capacities, operating characteristics, electrical characteristics, and furnished specialties and accessories.

B. Shop Drawings: For each VFD indicated.
   1. Include mounting and attachment details.
   2. Include details of equipment assemblies. Indicate dimensions, weights, loads, required clearances, method of field assembly, components, and location and size of each field connection.
   3. Include general diagrams for power, signal, and control wiring.

1.5 INFORMATIONAL SUBMITTALS

A. Coordination Drawings: Floor plans, drawn to scale, showing dimensioned layout on which the following items are shown and coordinated with each other, using input from installers of the items involved:
   1. Required working clearances and required area above and around VFDs.
   2. Show VFD layout and relationships between electrical components and adjacent structural and mechanical elements.
   3. Show support locations, type of support, and weight on each support.
   4. Indicate field measurements.

B. Seismic Qualification Certificates: For each VFD, accessories, and components, from manufacturer.
   1. Certificate of compliance.
   2. Dimensioned Outline Drawings of Equipment Unit: Identify center of gravity and locate and describe mounting and anchorage provisions.
   3. Detailed description of equipment anchorage devices on which the certification is based, and their installation requirements.

1.6 CLOSEOUT SUBMITTALS

A. Operation and Maintenance Data: For VFDs to include in emergency, operation, and maintenance manuals.
   1. Include the following:
      a. Manufacturer's written instructions for testing and adjusting thermal-magnetic circuit breaker and motor-circuit protector trip settings.
      b. Manufacturer's written instructions for testing, adjusting, and reprogramming microprocessor control modules.
      c. Manufacturer's written instructions for setting field-adjustable timers, controls, and status and alarm points.
      d. Load-Current and List of Settings of Adjustable Overload Relays: Compile after motors have been balanced, and arrange to demonstrate that switch settings for motor-running overload protection suit actual motors to be protected.

1.7 MAINTENANCE MATERIAL SUBMITTALS

A. Furnish extra materials that match products installed and that are packaged with protective covering for storage and identified with labels describing contents.
   1. Control Power Fuses equal to 1 for each size and type installed.

PART 2 PRODUCTS

2.1 MANUFACTURERS

A. ABB

B. Danfoss

C. Schneider Electric

D. Approved alternate per DHSS standards

2.2 SYSTEM DESCRIPTION

A. General Requirements for VFDs:
1. VFDs and Accessories: Listed and labeled as defined in NFPA 70, by a qualified testing agency, and marked for intended location and application.
2. Comply with NEMA ICS 7, NEMA ICS 61800-2, and UL 508A.

B. Application: Variable Frequency HVAC Pumping.

C. VFD Description: Variable-frequency motor controller, consisting of power converter that employs pulse-width-modulated inverter, factory built and tested in an enclosure, with integral disconnecting means and overcurrent and overload protection; listed and labeled by an NRTL as a complete unit; arranged to provide self-protection, protection, and variable-speed control of one or more three-phase induction motors by adjusting output voltage and frequency.
1. Units suitable for operation of NEMA MG 1, Design A and Design B motors, as defined by NEMA MG 1, Section IV, Part 30, "Application Considerations for Constant Speed Motors Used on a Sinusoidal Bus with Harmonic Content and General Purpose Motors Used with Adjustable-Voltage or Adjustable-Frequency Controls or Both."
2. Units suitable for operation of inverter-duty motors as defined by NEMA MG 1, Section IV, Part 31, "Definite-Purpose Inverter-Fed Polyphase Motors."
3. Listed and labeled for integrated short-circuit current (withstand) rating by an NRTL acceptable to authorities having jurisdiction.

D. Design and Rating: Match load type of pumps and type of connection used between motor and load such as direct or through a power-transmission connection.

E. Output Rating: Three phase; 10 to 60 Hz, with voltage proportional to frequency throughout voltage range; maximum voltage equals input voltage.

F. Unit Operating Requirements:
1. Input AC Voltage Tolerance: Plus 10 and minus 10 percent of VFD input voltage rating.
2. Input AC Voltage Unbalance: Not exceeding 3 percent.
3. Input Frequency Tolerance: Plus or minus 3 percent of VFD frequency rating.
4. Minimum Efficiency: 96 percent at 60 Hz, full load.
5. Minimum Displacement Primary-Side Power Factor: 96 percent under any load or speed condition.
6. Minimum Short-Circuit Current (Withstand) Rating: 10 kA.
7. Ambient Temperature Rating: Not less than 32 deg F and not exceeding 104 deg F.
8. Humidity Rating: Less than 95 percent (noncondensing).
9. Altitude Rating: Not exceeding 3300 feet.

10. Overload Capability: 1.1 times the base load current for 60 seconds; minimum of 1.8 times the base load current for three seconds.
11. Speed Regulation: Plus or minus 5 percent.

G. Inverter Logic: Microprocessor based, 32 bit, isolated from all power circuits.

H. Isolated Control Interface: Allows VFDs to follow remote-control signal over a minimum 40:1 speed range.
1. 4-20 mA, 0-10V from DDC, or compatible with equipment provided.

I. Internal Adjustability Capabilities:
1. Minimum Speed: 5 to 25 percent of maximum rpm. Initial speed 15%.
2. Maximum Speed: 80 to 100 percent of maximum rpm. Initial speed 100%
3. Acceleration: 0.1 to 999.9 seconds. Initial 10 seconds or factory default.
4. Deceleration: 0.1 to 999.9 seconds. Initial 10 seconds or factory default.
5. Current Limit: 30 to minimum of 150 percent of maximum rating. Initial 125%. Adjust per testing and balancing.

J. Self-Protection and Reliability Features:
1. Surge Suppression: Factory installed as an integral part of the VFD, complying with UL 1449 SPD, Type 1.
2. Loss of Input Signal Protection: Selectable response strategy, including speed default to a percent of the most recent speed, a preset speed, or stop; with alarm.
3. Under- and overvoltage trips.
4. Inverter overcurrent trips.
5. VFD and Motor-Overload/Overtemperature Protection: Microprocessor-based thermal protection system for monitoring VFDs and motor thermal characteristics, and for providing VFD overtemperature and motor-overload alarm and trip; settings selectable via the keypad.
6. Critical frequency rejection, with three selectable, adjustable deadbands.
7. Instantaneous line-to-line and line-to-ground overcurrent trips.
8. Loss-of-phase protection.
9. Reverse-phase protection.
10. Short-circuit protection.
11. Motor-overtemperature fault.

K. Automatic Reset/Restart: Attempt three restarts after drive fault or on return of power after an interruption and before shutting down for manual reset or fault correction; adjustable delay time between restart attempts.

L. Bidirectional Autospeed Search: Capable of starting VFD into rotating loads spinning in either direction and returning motor to set speed in proper direction, without causing damage to drive, motor, or load.

M. Torque Boost: Automatically varies starting and continuous torque to at least 1.5 times the minimum torque to ensure high-starting torque and increased torque at slow speeds.

N. Integral Input Disconnecting Means and OCPD: UL 489, instantaneous-trip circuit breaker with pad-lockable, door-mounted handle mechanism.
   1. Disconnect Rating: Not less than 115 percent of NFPA 70 motor full-load current rating or VFD input current rating, whichever is larger.
   2. Auxiliary Contacts: NO or NC, arranged to activate before switch blades open.
   3. NO alarm contact that operates only when circuit breaker has tripped.

2.3 PERFORMANCE REQUIREMENTS

A. Seismic Performance: VFDs shall withstand the effects of earthquake motions determined according to ASCE/SEI 7. The designated VFDs shall be tested and certified by an NRTL as meeting the ICC-ES AC 156 test procedure requirements.
   1. The term "withstand" means "the unit will remain in place without separation of any parts when subjected to the seismic forces specified.

2.4 CONTROLS AND INDICATION

A. Status Lights: Door-mounted LED indicators displaying the following conditions:
   1. Power on.
   2. Run.
   3. Overvoltage.
   4. Line fault.
   5. Overcurrent.
   6. External fault.

B. Panel-Mounted Operator Station: Manufacturer's standard front-accessible, sealed keypad and plain-English-language digital display; allows complete programming, program copying, operating, monitoring, and diagnostic capability.
   1. Keypad: In addition to required programming and control keys, include keys for HAND, OFF, and AUTO modes.
   2. Security Access: Provide electronic security access to controls through identification and password with at least three levels of access: View only; view and operate; and view, operate, and service.
      a. Control Authority: Supports at least four conditions: Off, local manual control at VFD, local automatic control at VFD, and automatic control through a remote source.

C. Indicating Devices: Digital display mounted flush in VFD door and connected to display VFD parameters including, but not limited to:
   1. Output frequency (Hz).
   2. Motor speed (rpm).
   3. Motor status (running, stop, fault).
   4. Motor current (amperes).
   5. Motor torque (percent).
   6. Fault or alarming status (code).
   7. PID feedback signal (percent).
   8. DC-link voltage (V dc).
   9. Set point frequency (Hz).
   10. Motor output voltage (V ac).

D. Control Signal Interfaces:
   1. Electric Input Signal Interface:
      a. A minimum of two programmable analog inputs:0- to 10-V dc.
      b. A minimum of six multifunction programmable digital inputs.

   2. Output Signal Interface: A minimum of one programmable analog output signal(s) (field adjustable) which can be configured for any of the following:
      a. Output frequency (Hz).
      b. Output current (load).
      c. DC-link voltage (V dc).
      d. Motor torque (percent).
      e. Motor speed (rpm).
      f. Set point frequency (Hz).
   3. Remote Indication Interface: A minimum of two programmable dry-circuit relay outputs (120-V ac, 1 A) for remote indication of the following:
      a. Motor running.
      b. Set point speed reached.
      c. Fault and warning indication (over temperature or overcurrent).

E. Interface with DDC System for HVAC: Factory-installed hardware and software shall interface with DDC system for HVAC to monitor, control, display, and record data for use in processing reports. VFD settings shall be retained within VFD's nonvolatile memory.
   1. Hardwired Points:
      a. Monitoring: On-off status.
      b. Control: On-off operation.
      c. Speed status.
   2. Communication Interface: Comply with ASHRAE 135. Communication shall interface with DDC system for HVAC. Control features and monitoring points displayed locally shall be available through the DDC system for HVAC.

2.5 OPTIONAL FEATURES

A. Digital communications over Modbus or Bacnet to communicate directly with DDC.

B. Communication Port: RS-232 port, USB 2.0 port, or equivalent connection capable of connecting programming terminal.

2.6 ENCLOSURES

A. VFD Enclosures: NEMA 250, to comply with environmental conditions at installed location.
   1. Dry and Clean Indoor Locations: Type 1.

2.7 ACCESSORIES

A. General Requirements for Control-Circuit and Pilot Devices: NEMA ICS 5; factory installed in VFD enclosure cover unless otherwise indicated.
   1. Push Buttons: Shielded.

2. Pilot Lights: Push to test.
3. Selector Switches: Rotary type.

B. Reversible NC/NO bypass contactor auxiliary contact(s).

C. Control Relays: Auxiliary and adjustable solid-state time-delay relays.

D. Phase-Failure, Phase-Reversal, and Undervoltage and Overvoltage Relays: Solid-state sensing circuit with isolated output contacts for hard-wired connections. Provide adjustable undervoltage, overvoltage, and time-delay settings.
1. Current Transformers: Continuous current rating, basic impulse insulating level (BIL) rating, burden, and accuracy class suitable for connected circuitry. Comply with IEEE C57.13.

E. Spare control-wiring terminal blocks**;** unwired.

2.8 SOURCE QUALITY CONTROL

A. VFDs will be considered defective if they do not pass tests and inspections.

B. Prepare test and inspection reports.

C. Provide factory start-up and inspection reports.

PART 3 EXECUTION

3.1 EXAMINATION

A. Examine areas, surfaces, and substrates to receive VFDs, with Installer present, for compliance with requirements for installation tolerances, and other conditions affecting performance of the Work.

B. Examine VFD before installation. Reject VFDs that are wet, moisture damaged, or mold damaged.

C. Examine roughing-in for conduit systems to verify actual locations of conduit connections before VFD installation.

D. Prepare written report, endorsed by Installer, listing conditions detrimental to performance of the Work

E. Proceed with installation only after unsatisfactory conditions have been corrected.

3.2 INSTALLATION

A. Wall-Mounting Controllers: Install with tops at uniform height and with disconnect operating handles not higher than 68 inches above finished floor, unless otherwise indicated, and by bolting units to wall or mounting on lightweight structural-steel

channels bolted to wall. For controllers not on walls, provide freestanding racks complying with Section 16070 "Hangers and Supports."

B. Temporary Lifting Provisions: Remove temporary lifting eyes, channels, and brackets and temporary blocking of moving parts from enclosures and components.

C. Install, connect, and fuse thermal-protector monitoring relays furnished with motor-driven equipment.

D. Comply with NECA 1.

3.3 CONTROL WIRING INSTALLATION

A. Install wiring between VFDs and remote devices and facility's central-control system. Comply with requirements in Section 16123 "Building Wire and Cable."

B. VFD Cable Wiring from VFD to pump to be no longer than 29 feet. If wiring is to exceed 29 feet than dv/dt type filters shall be installed in line.

C. Bundle, train, and support wiring in enclosures.

D. Connect selector switches and other automatic-control devices where applicable.
1. Connect selector switches to bypass only those manual- and automatic-control devices that have no safety functions when switches are in manual-control position.
2. Connect selector switches with control circuit in both manual and automatic positions for safety-type control devices such as low- and high-pressure cutouts, high-temperature cutouts, and motor-overload protectors.

3.4 IDENTIFICATION

A. Identify VFDs, components, and control wiring. Comply with requirements for identification specified in Section 16075 Electrical Identification."
1. Identify field-installed conductors, interconnecting wiring, and components; provide warning signs.
2. Label each VFD with engraved nameplate.
3. Label each enclosure-mounted control and pilot device.

B. Label inside cover of VFD with motor full load current(s) used to set overloads.

3.5 FIELD QUALITY CONTROL

A. Testing Agency: Owner will engage a qualified testing agency to perform tests and inspections.

B. Manufacturer's Field Service: Engage a factory-authorized service representative to test and inspect components, assemblies, and equipment installations, including connections.

C. Perform tests and inspections with the assistance of a factory-authorized service representative.

D. Acceptance Testing Preparation:
   1. Test insulation resistance for each VFD element, bus, component, connecting supply, feeder, and control circuit.
   2. Test continuity of each circuit.

E. Tests and Inspections:
   1. Inspect VFD, wiring, components, connections, and equipment installation. Test and adjust controllers, components, and equipment.
   2. Test insulation resistance for each VFD element, component, connecting motor supply, feeder, and control circuits.
   3. Test continuity of each circuit.
   4. Verify that voltages at VFD locations are within 10 percent of motor nameplate rated voltages. If outside this range for any motor, notify DHSS Project Manager before starting the motor(s).
   5. Test each motor for proper phase rotation.
   6. Perform tests according to the Inspection and Test Procedures for Adjustable Speed Drives stated in NETA Acceptance Testing Specification. Certify compliance with test parameters.
   7. Correct malfunctioning units on-site, where possible, and retest to demonstrate compliance; otherwise, replace with new units and retest.
   8. Test and adjust controls, remote monitoring, and safeties. Replace damaged and malfunctioning controls and equipment.

F. VFDs will be considered defective if they do not pass tests and inspections.

3.6 STARTUP SERVICE

A. Engage a factory-authorized service representative to perform startup service.
   1. Complete installation and startup checks according to manufacturer's written instructions.

3.7 ADJUSTING

A. Program microprocessors for required operational sequences, status indications, alarms, event recording, and display features. Clear events memory after final acceptance testing and prior to Substantial Completion.

B. Set field-adjustable switches, auxiliary relays, time-delay relays, timers, and overload-relay pickup and trip ranges.

C. Adjust the trip settings of instantaneous-only circuit breakers and thermal-magnetic circuit breakers with adjustable, instantaneous trip elements. Initially adjust to 6 times the motor nameplate full-load amperes and attempt to start motors several times, allowing for motor cool-down between starts. If tripping occurs on motor inrush, adjust settings in increments until motors start without tripping. Do not exceed 8 times the motor full-load amperes (or 11 times for NEMA Premium Efficient motors if required). Where these

maximum settings do not allow starting of a motor, notify DHSS Project Manager before increasing settings.

3.8 DEMONSTRATION

A. Engage a factory-authorized service representative to train Owner's maintenance personnel to adjust, operate, and maintain VFDs.

END OF SECTION

PART 1 GENERAL

1.1 SUMMARY

A. This Section includes AC general-purpose controllers rated 250 V and less that are supplied as enclosed units.

1.2 SECTION INCLUDES

A. Manual motor starters.

B. Combination magnetic motor starters.

1.3 SUBMITTALS

A. Product Data: For each type of enclosed controller. Include dimensions and manufacturer's technical data on features, performance, electrical characteristics, ratings, and finishes.

B. Shop Drawings: For each enclosed controller.
   1. Dimensioned plans, elevations, sections, and details. Show tabulations of installed devices, equipment features, and ratings. Include the following:
      a. Enclosure types and details.
      b. Nameplate legends.
      c. Short-circuit current rating of integrated unit.

C. Maintenance Data: For enclosed controllers and components to include in maintenance manuals specified in Division 1. In addition to requirements specified in Division 1 Section "Contract Closeout Procedures," include the following:
   1. Routine maintenance requirements for enclosed controllers and all installed components.
   2. Manufacturer's written instructions for testing and adjusting overcurrent protective devices.

D. Load-Current and Overload-Relay Heater List: Compile after motors have been installed and arrange to demonstrate that selection of heaters suits actual motor nameplate full-load currents.

1.4 QUALITY ASSURANCE

A. Manufacturer Qualifications: Maintain, within 100 miles of Project site, a service center capable of providing training, parts, and emergency maintenance and repairs.

B. Source Limitations: Obtain enclosed controllers of a single type through one source from a single manufacturer.

C. Electrical Components, Devices, and Accessories: Listed and labeled as defined in NFPA 70, Article 100, by a testing agency acceptable to authorities having jurisdiction, and marked for intended use.

D. Comply with NFPA 70.

1.5 DELIVERY, STORAGE, AND HANDLING

A. Store enclosed controllers indoors in clean, dry space with uniform temperature to prevent condensation. Protect enclosed controllers from exposure to dirt, fumes, water, corrosive substances, and physical damage.

B. If stored in areas subjected to weather, cover enclosed controllers to protect from weather, dirt, dust, corrosive substances, and physical damage. Remove loose packing and flammable materials from inside controllers; install electric heating of sufficient wattage to prevent condensation.

1.6 PROJECT CONDITIONS

A. Environmental Limitations: Rate equipment for continuous operation under the following conditions, unless otherwise indicated:
1. Ambient Temperature: Not less than minus 22 deg F and not exceeding 104 deg F.
2. Altitude: Not exceeding 6600 feet.

1.7 COORDINATION

A. Coordinate layout and installation of enclosed controllers with other construction including conduit, piping, equipment, and adjacent surfaces. Maintain required workspace clearances and required clearances for equipment access doors and panels.

PART 2 PRODUCTS

2.1 MANUFACTURERS

A. Available Manufacturers: Square D.

2.2 MANUAL ENCLOSED CONTROLLERS

A. Manual Motor Controller: NEMA ICS 2, AC general-purpose Class A manually operated, full-voltage controller with overload element, red pilot light, Field selectable NO/NC auxiliary contact, and push-button or toggle operator.

B. Fractional Horsepower Manual Controller: NEMA ICS 2, AC general-purpose Class A manually operated, full-voltage controller for fractional horsepower induction motors, with thermal overload unit, redpilot light, and toggle operator.

2.3 AUTOMATIC COMBINATION CONTROLLERS

A. Automatic Controllers other than controllers integral to and provided with equipment.

B. Motors under 20 horsepower: Magnetic Motor Controllers with full voltage, non-reversing starters (FVNR), NEMA ICS 2, AC general-purpose Class A magnetic controller for induction motors rated in horsepower.
1. Coil Operating Voltage: 120 volts, 60 Hertz.
2. Overload Relay: NEMA ICS; bimetal.

3. Enclosure:
   a. Interior: NEMA ICS 6, Type 1.
   b. Exterior: NEMA ICS 6, Type 3R.

C. Product options and features
1. Motor-circuit protector type HP rated disconnecting means,
2. Auxiliary Contacts: NEMA ICS 2, 2 each field convertible contacts in addition to seal-in contact.
3. Cover Mounted Pilot Devices: NEMA ICS 2, heavy duty oil-tight type.
4. Pilot Device Contacts: NEMA ICS 2, Form Z, rated A150.
5. Push-buttons: Unguarded type.
6. Indicating Lights: LED type.
7. Selector Switches: Rotary type (Hand-Off-Automatic).
8. Control Power Transformers: 120 volt secondary. Provide primary and secondary overcurrent protection and bond "neutral" leg of secondary to enclosure.

2.4 ENCLOSURES

A. Description: Surface-mounted cabinets unless otherwise indicated. NEMA 250, Type 1, unless otherwise indicated to comply with environmental conditions at installed location.

2.5 ACCESSORIES

A. Devices shall be factory installed in controller enclosure, unless otherwise indicated.

B. Push-Button Stations, Pilot Lights, and Selector Switches: NEMA ICS 2, heavy-duty type.

2.6 FACTORY FINISHES

A. Provide manufacturer's standard paint applied to factory-assembled enclosures before shipping, unless indicated otherwise on the Drawings or specified further below.

PART 3 EXECUTION

3.1 EXAMINATION

A. Examine areas and surfaces to receive enclosed controllers for compliance with requirements, installation tolerances, and other conditions affecting performance.

B. Proceed with installation only after unsatisfactory conditions have been corrected.

3.2 APPLICATIONS

A. Select features of each enclosed controller to coordinate with ratings and characteristics of supply circuit and motor; required control sequence; duty cycle of motor, drive, and load; and configuration of pilot device and control circuit affecting controller functions.

B. Select horsepower rating of controllers to suit motor controlled.

3.3 INSTALLATION

A. See Division 16 Section "Basic Electrical Materials Requirements" for general installation requirements.

3.4 IDENTIFICATION

A. Identify enclosed controller components and control wiring according to Division 16 Section "Basic Electrical Requirements."

B. Label inside cover of VFD with motor full load current(s) used to set overloads.

3.5 CONNECTIONS

A. Conduit installation requirements are specified in other Division 16 Sections. Drawings indicate general arrangement of conduit, fittings, and specialties.

B. Ground equipment.

C. Tighten electrical connectors and terminals according to manufacturer's published torque-tightening values. If manufacturer's torque values are not indicated, use those specified in UL 486A and UL 486B.

3.6 FIELD QUALITY CONTROL

A. Prepare for acceptance tests as follows:
   1. Test insulation resistance for each enclosed controller bus, component, connecting supply, feeder, and control circuit.
   2. Test continuity of each circuit.

B. Perform the following field quality-control testing:
   1. Perform each electrical test and visual and mechanical inspection in accordance with the manufacturer’s instructions. Certify compliance with test parameters.
   2. Correct malfunctioning units on-site, where possible, and retest to demonstrate compliance; otherwise, replace with new units and retest.

3.7 CLEANING

A. Clean enclosed controllers internally, on completion of installation, according to manufacturer's written instructions. Vacuum dirt and debris; do not use compressed air to assist in cleaning.

END OF SECTION

PART 1 GENERAL

1.1 SECTION INCLUDES

A. Branch circuit panelboards.

B. Modifications to existing panelboards.

1.2 RELATED SECTIONS

A. Division 1 – General Requirements.

B. Section 16010 – Basic Electrical Requirements.

C. Section 16060 – Grounding and Bonding.

D. Section 16123 – Building Wire and Cable.

E. Section 16130 – Raceway and Boxes.

1.3 REFERENCES

A. National Electrical Contractors Association:
   1. NECA 1 – Standard Practices for Good Workmanship in Electrical Contracting.

B. National Electrical Manufacturer's Association:
   1. NEMA AB 1 – Molded-Case Circuit Breakers, Molded Case Switches, and Circuit Breaker Enclosures.
   2. NEMA ICS 2 – Industrial Control and Systems Controllers, Contactors and Overload Relays Rated 600 Volts.
   3. NEMA ICS 5 – Industrial Control and Systems: Control Circuit and Pilot Devices.
   4. NEMA KS 1 – Enclosed and Miscellaneous Distribution Equipment Switches (600 Volts Maximum).
   5. NEMA PB 1 – Panelboards.
   6. NEMA PB1.1 – General Instructions for Proper Installation, Operation, and Maintenance of Panelboards Rated 600 Volts or Less.

C. National Fire Protection Association:
   1. NFPA 70 – National Electrical Code, latest adopted edition.

1.4 REGULATORY REQUIREMENTS

A. Conform to requirements of NFPA 70, latest adopted edition.

B. Furnish products listed and classified by Underwriters Laboratories, Inc. or an independent testing firm, acceptable to authority having jurisdiction, as suitable for purpose specified and shown.

1.5 QUALIFICATIONS

A. Manufacturer: Company specializing in manufacturing products specified in this section with minimum three years documented experience.

1.6 QUALITY ASSURANCE

A. Perform Work in accordance with NECA 1 - Standard Practice for Good Workmanship in Electrical Contracting.

1.7 SUBMITTALS

A. Submit under provisions of Division 1 and Division 16.

B. Shop Drawings: Indicate front and side views of enclosures with overall dimensions shown; conduit entrance locations and requirements; nameplate legends; size and number of bus bars per phase, neutral, and ground.

C. Product Data: Provide electrical characteristics including voltage, frame size and trip ratings, fault current withstand ratings, and time-current curves of all equipment and components.

D. Product Data: Provide manufacturer's catalog information showing dimensions, colors, and configurations.

E. Manufacturer's Instructions:
   1. Indicate application conditions and limitations of use stipulated by product testing agency specified under regulatory requirements.
   2. Include instructions for storage, handling, protection, examination, preparation, operation, and installation of product.

1.8 PROJECT RECORD DOCUMENTS

A. Submit under provisions of Division 1 and Division 16.

B. Record actual locations of panelboards; indicate actual branch circuit arrangement on as-built Drawings.

1.9 PROJECT CONDITIONS

A. Verify locations of Panelboards prior to rough-in.

1.10 DESIGN REQUIREMENTS

A. Panelboard Size: ANSI, IEEE, NFPA 70.

1.11 DELIVERY, STORAGE, AND HANDLING

A. Deliver, store, protect, and handle products to site under provisions of Division 1and Division 16.

B. Accept Panelboards on site. Inspect for damage.

C. Store in a clean, dry space. Maintain factory wrapping or provide cover to protect units from dirt, water, construction debris, and traffic.

D. Handle in accordance with NEMA PB 1.1 and manufacturer's written instructions. Handle carefully to avoid damage to panelboard internal components, enclosure, and finish.

1.12 COORDINATION

A. Coordinate Work under provisions of Division 1 and Division 16.

B. Determine required separation between panelboards and other work.

C. Coordinate panelboard locations to avoid interference with other work.

1.13 OPERATION AND MAINTENANCE DATA

A. Submit under provisions of Division 1 and Division 16.

B. Submit manufacturer’s operation and maintenance data.

C. Include operating data for each circuit breaker type.

D. Include maintenance instructions for cleaning methods, recommended cleaning materials, instruction for circuit breaker removal, installation, testing and adjustment for each circuit breaker type.

1.14 MAINTENANCE MATERIALS

A. Provide maintenance materials under provisions of Division 1 and Division 16.

B. Provide two of each panelboard key.

PART 2 PRODUCTS

2.1 BRANCH CIRCUIT PANELBOARDS

A. Manufacturers:
1. Square D.

B. Lighting and Appliance Branch Circuit Panelboards: NEMA PB1, circuit breaker type.

C. Panelboard Bus: Copper, ratings as indicated. Provide copper ground bus in each panelboard; provide insulated ground bus where scheduled.

D. Minimum integrated short circuit rating: 10,000 amperes rms symmetrical, unless indicated otherwise on Drawings.

E. Molded Case Circuit Breakers: NEMA AB 1, bolt-on type thermal magnetic trip circuit breakers, with common trip handle for all poles. Provide circuit breakers UL listed as Type SWD for lighting circuits, and as HACR for Heating and Air Conditioning circuits.

F. Heating Circuits: Provide UL Class A ground fault interrupter circuit breakers where scheduled. Do not use tandem circuit breakers.

G. Enclosure: NEMA PB 1, NEMA Type 1.

H. Cabinet Front: Surface cabinet front with concealed trim clamps, concealed hinge, and flush lock all keyed alike. Finish in manufacturer's standard.

PART 3 EXECUTION

3.1 INSTALLATION

A. Install panelboards in accordance with NEMA PB 1.1.

B. Install panelboards plumb. Provide supports in accordance with Section 16070.

C. Height: Maximum 6 ft to top of panelboard or handle of highest circuit breaker, when circuit breaker is in the on position.

D. Provide filler plates for unused spaces in panelboards.

E. Provide typed circuit directory for each branch circuit panelboard. Revise directory to reflect circuiting changes required to balance phase loads for each new or modified existing panelboard.

F. Provide engraved plastic nameplates under the provisions of Section 16075.

3.2 FIELD QUALITY CONTROL

A. Field inspection and testing will be performed under provisions of Division 1 and Division 16.

B. For panelboards not circuited as shown on the Drawings; measure steady state load currents at each phase of the panelboard feeder; rearrange circuits in the panelboard to balance the phase loads to within 20 percent of each other.

C. Visual and Mechanical Inspection: Inspect for physical damage, proper alignment, anchorage, and grounding. Check proper installation and tightness of connections for circuit breakers.

END OF SECTION

PART 1 GENERAL

1.1 SECTION INCLUDES

A. Interior luminaires and accessories.

B. Luminaire accessories.

1.2 REGULATORY REQUIREMENTS

A. Conform to requirements of NFPA 70, latest adopted edition.

B. Provide products listed and classified by Underwriters Laboratories, Inc. or an independent testing firm, acceptable to authority having jurisdiction, as suitable for purpose specified and shown.

1.3 QUALIFICATIONS

A. Manufacturer: Company specializing in manufacturing products specified in this section with minimum three years experience.

1.4 QUALITY ASSURANCE

A. Perform Work in accordance with NECA 1 – Standard Practices for Good Workmanship in Electrical Contracting.

1.5 SUBMITTALS

A. Submit under provisions of Division 1.

B. Product Data: Include manufacturer’s product literature indicating all accessories and features and colors where applicable.

C. Shop Drawings: Indicate dimensions and components for each luminaire that is not a standard product of the manufacturer.

D. Manufacturer's Instructions: Include instructions for storage, handling, protection, examination, preparation, and installation of product.

1.6 PROJECT RECORD DOCUMENTS

A. Submit under provisions of Division 1, and Division 16.

B. Accurately record actual locations of each luminaire on as-built Drawings.

1.7 PROJECT CONDITIONS

A. Verify locations of each luminaire prior to rough-in.

1.8 DELIVERY, STORAGE, AND HANDLING

A. Deliver, store, protect, and handle products under provisions of Division 1, and Division 16.

B. Accept luminaires on site. Inspect for damage.

C. Store in a clean, dry space. Maintain factory wrapping or provide an additional heavy canvas or heavy plastic cover to protect units from dirt, water, construction debris, and traffic.

1.9 COORDINATION

A. Coordinate Work under provisions of Division 1, and Division 16.

B. Determine and maintain required separation between luminaires and other work.

C. Coordinate luminaire locations to avoid interference with other work.

1.10 OPERATION AND MAINTENANCE DATA

A. Submit manufacturer's operation data for inverter under provisions of Division 1, and Division 16.

B. Submit maintenance data for inverter under provisions of Division 1, and Division 16.

1.11 ENVIRONMENTAL REQUIREMENTS

A. Conform to NEMA PB 2 service conditions during and after installation of luminaires.

1.12 FIELD MEASUREMENTS

A. Verify in field dimensions indicated on Drawings are reasonably accurate.

PART 2 PRODUCTS

2.1 LED LUMINAIRES

A. Provide products specified on drawings

B. Substitutions: Under provisions of division 1 and division 16.

2.2 EXIT SIGNS

A. Provide products specified on drawings

B. Substitutions: Under provisions of division 1 and division 16.

C. Face: As shown on drawings.

D. Directional arrows: As shown on drawings.

PART 3 EXECUTION

3.1 EXAMINATION

A. Examine substrate and supporting grids for luminaires.

B. Examine each luminaire to determine suitability for lamps specified.

3.2 INSTALLATION

A. Provide in accordance with manufacturers instructions.

B. Provide surface mounted luminaires and exit signs plumb and adjust to align with building lines and with each other. Secure to prohibit movement.

C. Provide wall mounted exit signs at heights indicated on Drawings.

D. Provide accessories furnished with each luminaire.

E. Make wiring connections to branch circuit using building wire with insulation suitable for temperature conditions within luminaire.

F. Bond products and metal accessories to branch circuit equipment grounding conductor.

3.3 FIELD QUALITY CONTROL

A. Operate each luminaire after installation and connection. Inspect for proper connection and operation.

B. Replace luminaires not operating properly and all defective luminaires at substantial completion.

3.4 ADJUSTING

A. Adjust Work under provisions of Division 1, and Division 16.

B. Aim and adjust luminaires.

C. Adjust exit sign directional arrows.

3.5 CLEANING

A. Clean Work under provisions of Division 1, and Division 16.

B. Clean electrical parts to remove conductive and deleterious materials.

C. Remove dirt and debris from enclosure.

D. Clean photometric control surfaces as recommended by manufacturer.

E. Clean finishes and touch-up damage.

3.6 DEMONSTRATION

A. Provide systems demonstration under provisions of Division 1 and Division 16.

END OF SECTION

MCLAUGHLIN YOUTH CENTER AIR HANDLING UNIT UPGRADES

100% CONSTRUCTION DOCUMENTS

PROJECT #14-78C

JUNE 10, 2014

FOR:

STATE OF ALASKA DEPARTMENT OF HEALTH AND SOCIAL SERVICES

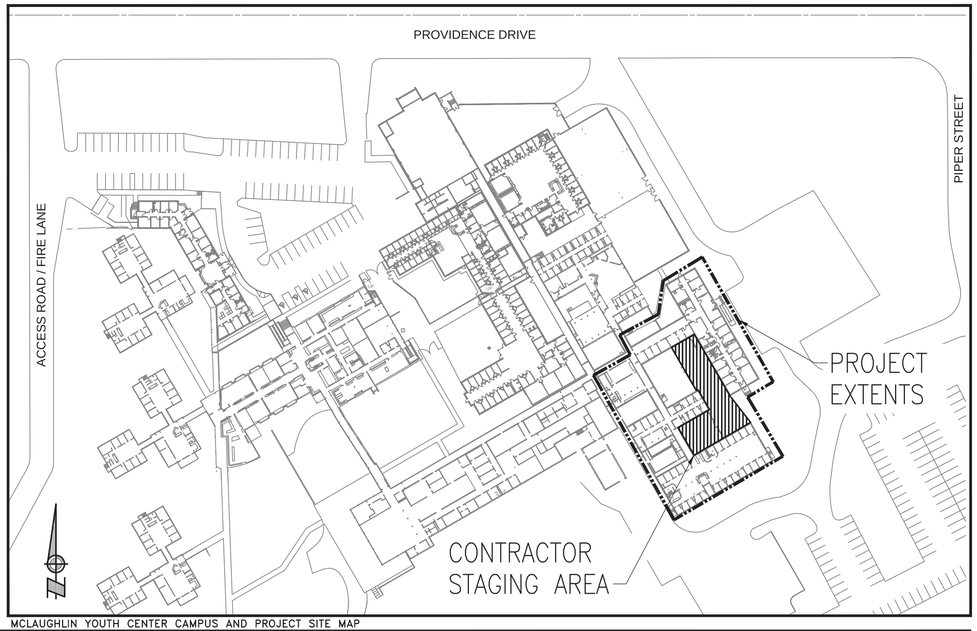

MCLAUGHLIN YOUTH CENTER CAMPUS AND PROJECT SITE MAP

PREPARED BY:

PDC INC. ENGINEERS

PROJECT DESCRIPTION

THIS PROJECT REPLACES THREE AIR HANDLING UNITS IN THE PROBATION WING SUBFLOOR UTILITY SPACE, THE INSTALLATION OF A GLYCOL SYSTEM, AND A REPLACEMENT OF VARIOUS REHEAT COILS IN THE FACILITY.

ADDITIVE ALTERNATE #1: CONVERSION OF JOHNSON CONTROLS DDC GRAPHICS TO SIEMENS DDC SYSTEM, AND ADDITIONAL DDC POINTS FOR HEAT EXCHANGER PUMPS.

ADDITIVE ALTERNATE #2: INSTALLING MECHANICAL COOLING IN THE AIR HANDLERS SERVING THE PROBATION WING.

ADDITIVE ALTERNATE #3: DETENTION CORE LIGHTS AND RECEPTACLES.

SHEET INDEX

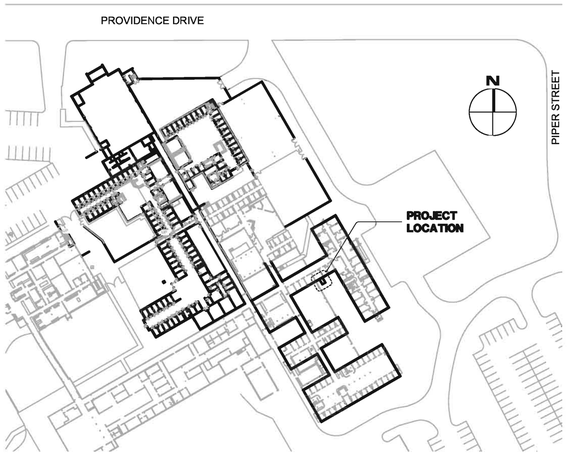

1 / A100 **VICINITY MAP**
1" = 100'

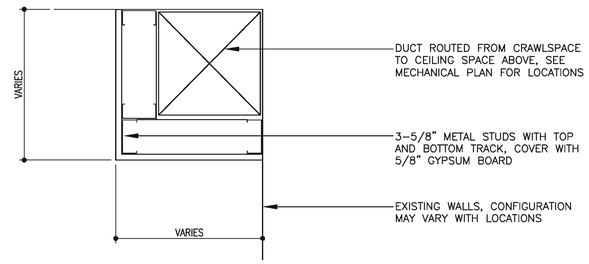

4 / A100 **CHASE DETAIL - PLAN VIEW**
1-1/2" = 1'-0"

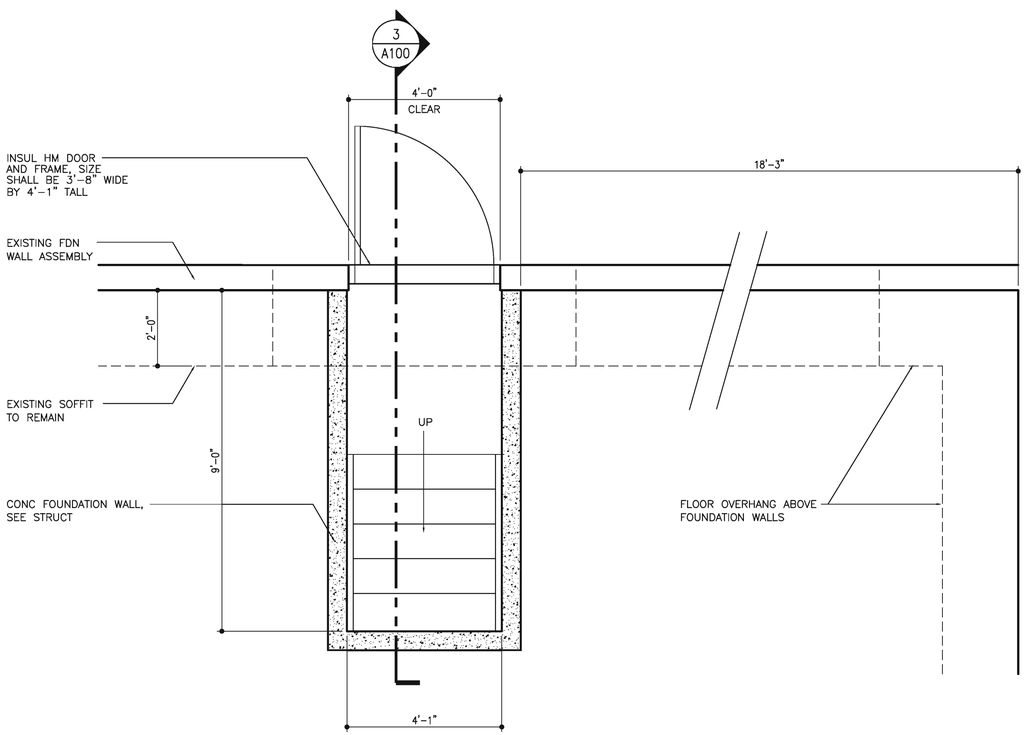

2 / A100 **FOUNDATION PLAN**
1/2" = 1'-0"

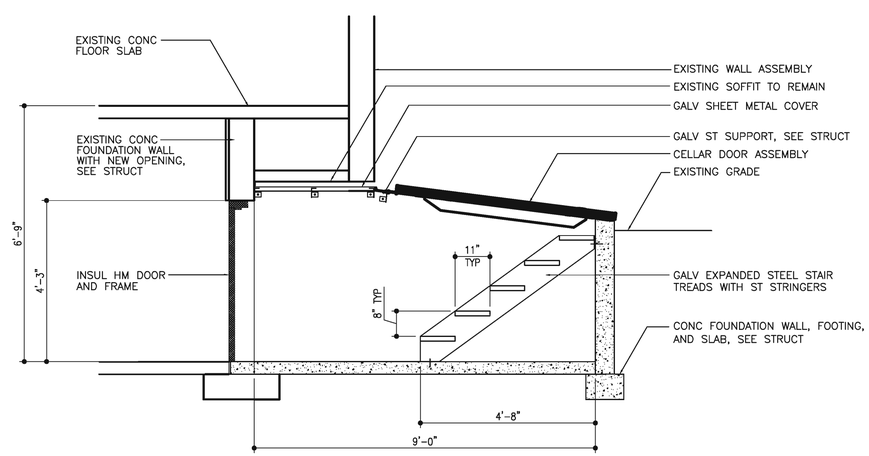

3 / A100 **SECTION**
1/2" = 1'-0"

N PLAN

N TRUE

P:\14-148 MYC HVAC Access\2-CAD\Drawings\A-1 Base, ROY ROUNTREE Jun 10, 2014 10:39 AM

CONSULTANT :
BETTISWORTH NORTH ARCHITECTS AND PLANNERS
2600 DENALI STREET, SUITE 710
ANCHORAGE, AK 99503
907-561-5780

STATE OF ALASKA
49TH
Roy L. Rountree
ROY L. ROUNTREE
No. A-8259
June 10, 2014
REGISTERED PROFESSIONAL ARCHITECT

PDC INC. ENGINEERS
2700 Gambell Street, Suite 500, Anchorage, Alaska 99503

PROJECT :
MCLAUGHLIN YOUTH CENTER AIR HANDLING UNIT UPGRADES
PROJECT #14-78C
ANCHORAGE, AK

SHEET TITLE :

DESIGN	
DRAWN	
CHECKED	
DATE	06/10/14
PROJECT No.	14003AN
SHEET NUMBER	A100
TTL#	

SHEET NOTES

1. ELECTRICAL SHEET NOTES, SEE DESCRIPTION ON SAME SHEET.
2. GENERAL ELECTRICAL SHEET NOTES FOR THIS SHEET.

GENERAL NOTES

1. IN GENERAL, CIRCUIT ROUTING IS NOT SHOWN, HOWEVER THE CIRCUIT(S) TO BE CONNECTED ARE IDENTIFIED.
2. ALL 120V AND 208V SINGLE PHASE 15 AND 20 AMPERE BRANCH CIRCUITS LESS THAN 75' ARE BASED ON 2#12, 1#12 GND, 1/2" C. OR APPROVED EQUIVALENT UON. ALL OTHER BRANCH CIRCUIT CONDUCTORS SHALL BE SIZED IN ACCORDANCE WITH NEC REQUIREMENTS FOR THE LOAD SERVED AND OVERCURRENT DEVICE SHOWN IN THE PANEL SCHEDULE, UON. CALCULATE VOLTAGE DROP FOR CIRCUITS EXCEEDING 75' IN LENGTH TO NOT EXCEED 3%.
3. SHARED NEUTRALS NOT ALLOWED IN THIS PROJECT.
4. ALL RACEWAYS SHALL BE STEEL, UON.
5. EXISTING CONDITIONS SHOWN ARE BASED OFF OF RECORD DOCUMENTS AND PRELIMINARY FIELD INVESTIGATIONS, CONTRACTOR TO FIELD VERIFY.
6. EXISTING BUILDING FIRE ALARM IS SERVICED BY SIMPLEX GRINNELL. MODIFICATIONS TO FIRE ALARM SYSTEM SHALL REQUIRE TESTING IAW NFPA 72. NOTIFY AHJ AND MONITORING SERVICE BEFORE PERFORMING ANY WORK ON EXISTING FIRE ALARM SYSTEM.
7. CONDUIT LOCATED IN CONCRETE OR IN OTHERWISE INACCESSIBLE SPACES MAY BE ABANDONED IN PLACE. CUT CONDUIT FLUSH WITH SURFACE.

LINE TYPES

- - - - - - - - - DEMO WORK (D)

———————— EXISTING WORK (E)

———————— NEW WORK

ABBREVIATIONS

AHJ	AUTHORITY HAVING JURISDICTION
AHU	AIR HANDLING UNIT
AWG	AMERICAN WIRE GAUGE
AFF	ABOVE FINISHED FLOOR
C	CONDUIT
ECB	ENCLOSED CIRCUIT BREAKER
DHSS	DEPARTMENT OF HEALTH AND SOCIAL SERVICES (OWNER)
IAW	IN ACCORDANCE WITH
J-BOX	JUNCTION BOX
KCMIL	1000 CIRCULAR MILS
NEC	NATIONAL ELECTRICAL CODE
NEMA	NATIONAL ELECTRICAL MANUFACTURER'S ASSOCIATION
NFPA	NATIONAL FIRE PROTECTION ASSOCIATION
RF	RELIEF FAN
SF	SUPPLY FAN

SYMBOLS

	MOTOR CONNECTION
	EQUIPMENT CONNECTION
G	GFCI DUPLEX RECEPTACLE, WHITE, SPECIFICATION GRADE, NEMA 5-20R WITH STAINLESS STEEL FACEPLATE. UP 48" AFF, UON.
WP	GFCI DUPLEX RECEPTACLE, SPECIFICATION GRADE NEMA 5-20R, WITH WEATHERPROOF WHILE IN USE COVER. MOUNT ON MECHANICAL EQUIPMENT UP 48" AFF, UON.
SM	MANUAL MOTOR SWITCH WITH THERMAL OVERLOAD, HP RATED.
U	COMBINATION STARTER/DISCONNECT WITH THERMAL OVERLOADS, SIZE AS REQUIRED. LOCATE ON OR NEAR EQUIPMENT.
U VFD	VARIABLE FREQUENCY DRIVE WITH PUMP DISCONNECT.
J	JUNCTION BOX
	BRANCH-CIRCUIT PANELBOARD
	DATA JACK, UP 48". CONFIGURATION TO MATCH EXISTING, PROVIDE STAINLESS STEEL COVERPLATE.
S	SINGLE POLE SWITCH, 277V SPECIFICATION GRADE, TOGGLE TYPE WITH STAINLESS STEEL COVER, UP 48" AFF.
S3	3-WAY LIGHT SWITCH, SPECIFICATION GRADE, TOGGLE TYPE WITH STAINLESS STEEL COVER, UP 48" AFF.
	EXISTING SURFACE MOUNT LIGHT FIXTURE WITH A19 SOCKET AND SINGLE RECEPTACLE.
	SURFACE MOUNT LED LIGHT FIXTURE, 3" X 4" X 4', 53W. COOPER LIGHTING: SNLED-L01-58-UNV-LW-L840-1
	EMERGENCY SURFACE MOUNT LED LIGHT FIXTURE, 3" X 4" X 4', 53W. COOPER LIGHTING: SNLED-L01-58-UNV-LW-L840-1-EL
	EXIT SIGN, UP 4" ABOVE CRAWL SPACE DOOR TO BOTTOM, WITH INTEGRAL NiCad BATTERY. COOPER LIGHTING: APX6-R.
WH	WATT HOUR METER, TEMPORARY.
	INDICATES WIRING AND CONDUIT BETWEEN DEVICES, #12 AWG, UON. ROUTE SHOWN IS DIAGRAMATIC, CONTRACTOR TO ROUTE AS NECESSARY. SEE GENERAL NOTE 2 THIS SHEET.
7B-17	HOMERUN TO PANEL, PANEL AND CIRCUIT NUMBER SHOWN. SEE GENERAL NOTE 2 THIS SHEET.
F	EXISTING FIRE ALARM PULL STATION.
	EXISTING FIRE ALARM HORN/STROBE.
CM	EXISTING FIRE ALARM CONTROL MODULE

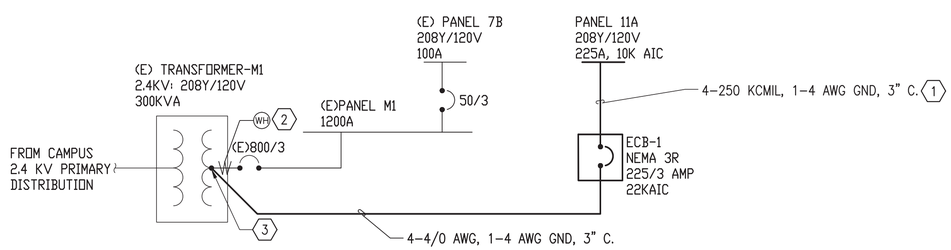

NOTES

1. ROUTE CONDUIT DOWN INTO AND THROUGH SUB FLOOR UTILITY SPACE AND UP INTO NEW PANEL 11A, SEE 1/E3.1.
2. 30 DAY METERING PERFORMED BY OTHERS, START DATE IS 16MAY2014. IF FINAL RESULTS OF METERING TEST DETERMINE THAT THERE IS INADEQUATE CAPACITY TO ADD NEW ELECTRICAL LOADS AS CURRENTLY SHOWN, THEN CONTRACTOR SHALL SUBMIT A CHANGE ORDER TO THE OWNER FOR ALTERNATE METHODS.
   IT IS CURRENTLY ANTICIPATED THAT THERE IS ADEQUATE CAPACITY AVAILABLE. DHSS SHALL BEAR ALL COSTS ASSOCIATED WITH ABOVE MENTIONED CHANGE ORDER. THEN A DESIGN CHANGE WILL BE ISSUED FOR PRICING AND INCORPORATION INTO THE NEW WORK.
3. PROVIDE TAP ON SECONDARY LUGS OF TRANSFORMER.

1 / E0.1 **ELECTRICAL ONE LINE - PARTIAL**

SCALE: NTS

PANEL "7B" SCHEDULE

VOLTAGE: 208Y/120V, 3PH, 4W
BUS: 100
MAIN: LUGS ONLY – FED BY 50A CB

LOCATION: "SUB FLOOR UTILITY SPACE"

MIN. A.I.C. RATING: 10,000
ENCLOSURE: NEMA 1
MOUNTING: SURFACE

LOAD DESCRIPTION	NOTE	KVA	LOAD	AMP	P	CKT	PHASE			CKT	AMP	P	LOAD DESCRIPTION	NOTE	KVA	LOAD
XEROX MACHINE	3	1.30	O	20	1	1	A			2	20	1	UNIT HEATER	3	0.30	O
F-12B	3	0.30	O	20	1	3		B		4	20	1	F14-B	3	0.80	O
F-13B	3	0.30	O	20	1	5			C	6	20	1	SPARE	2		S
LIGHTING/RECEPTS, CRAWL SPACE	5	1.04	L	20	1	7	A			8	20	1	UNIT HEATERS	3	0.45	O
F-15B, CP-3B, CP-4B	3	0.50	O	20	1	9		B		10	20	1	CP-5B	3	0.50	O
SPARE	2		S	20	1	11			C	12	20	1	HONEYWELL CONTROL	3	0.10	O
DOMESTIC HW CIRC PUMP	3	0.50	O	20	1	13	A			14	20	1	LIGHTING/RECEPTS, CRAWL SPACE	5	1.20	L
TELEPHONE	3	0.10	O	20	1	15		B		16	20	1	SPARE			S
LIGHTING/RECEPTS, CRAWL SPACE	5	1.22	L	20	1	17			C	18	30	1	XEROX	3	1.80	O
SPARE			S	20	1	19	A			20	20	1	SPARE			S

SUMMARY BY LOAD TYPE		CONNECTED KVA PH A	PH B	PH C	FEED	TOTAL KVA	NEC %	NEC TOTAL
L	LIGHTING	2.2		1.2		3.5	1.25	4.3
R	RECEPTACLES						10K+50%	
M	MOTORS						1.00	
LM	LARGEST MOTOR						1.25	
C	CONTINUOUS						1.25	
N	NON-CONTINUOUS						1.00	
S	SPARE						1.00	
X	NON-COINCIDENT						0.00	
O	EXISTING LOAD	2.6	2.2	2.2		7.0	1.00	7.0
F	FEEDER							
TOTAL KVA (PHASE)		4.8	2.2	3.4		10.4		11.3
TOTAL AMPERES		39.9	18.3	28.5		28.9		31.3
PHASE BALANCE, ABC		A-B	B-C	C-A				
PERCENT		74.6%	35.2%	39.5%				

NOTES:
1. PROVIDE TYPED PANEL DIRECTORY IAW NEC 408.4 TO INCLUDE FINAL LOCATIONS.
2. ALL SPARE BREAKERS TO BE LEFT IN OFF POSITION AT COMPLETION OF JOB.
3. LOAD AND EQUIPMENT DESCRIPTIONS ARE BASED OFF OF RECORD DOCUMENTS.
4. EXISTING PANEL IS SQUARE D NQOB
5. UTILIZE EXISTING SPARE CIRCUIT BREAKER

PANEL "11A" SCHEDULE

VOLTAGE: 208Y/120V, 3PH, 4W
BUS: 225
MAIN: LUGS ONLY – FED BY 225A CB

LOCATION: "COPIER 114"

MIN. A.I.C. RATING: 10,000
ENCLOSURE: NEMA 1
MOUNTING: SURFACE

LOAD DESCRIPTION	NOTE	KVA	LOAD	AMP	P	CKT	PHASE			CKT	AMP	P	LOAD DESCRIPTION	NOTE	KVA	LOAD
ADD ALT #2: RECEPTACLE, ROOF		0.36	R	20	1	1	A			2	15	3	AHU-12-SF, SUB FLOOR SPACE		2.50	M
SPARE			S	20	1	3		B		4	–	–				–
SPARE			S	20	1	5			C	6	–	–				–
SPACE W/ HARDWARE			S	20	1	7	A			8	15	3	AHU-13-SF, SUB FLOOR SPACE		2.50	M
SPACE W/ HARDWARE			S	20	1	9		B		10	–	–				–
SPACE W/ HARDWARE			S	20	1	11			C	12	–	–				–
AHU-14-SF, SUB FLOOR SPACE		4.00	M	20	3	13	A			14	20	1	SPARE			S
			–	–	–	15		B		16	20	1	DDC, GLYCOL RECEPT, CRAWL SPACE		0.75	M
			–	–	–	17			C	18	20	1	SPARE			S
AHU-12-RF, SUB FLOOR SPACE		2.50	M	15	3	19	A			20	15	3	AHU-14-RF, SUB FLOOR SPACE		2.50	M
			–	–	–	21		B		22	–	–				–
			–	–	–	23			C	24	–	–				–
AHU-13-RF, SUB FLOOR SPACE		2.50	M	15	3	25	A			26	15	3	P-4B, P-5B	3	1.73	M
			–	–	–	27		B		28	–	–				–
			–	–	–	29			C	30	–	–				–
ADD ALT #2: CU-2, ROOF		6.80	M	35	3	31	A			32		1	SPACE W/ HARDWARE			
			–	–	–	33		B		34		1	SPACE W/ HARDWARE			
			–	–	–	35			C	36		1	SPACE W/ HARDWARE			
ADD ALT #2: CU-3, ROOF		7.70	LM	40	3	37	A			38	35	3	ADD ALT #2: CU-1, ROOF		6.70	M
			–	–	–	39		B		40	–	–				–
			–	–	–	41			C	42	–	–				–

SUMMARY BY LOAD TYPE		CONNECTED KVA PH A	PH B	PH C	FEED	TOTAL KVA	NEC %	NEC TOTAL
L	LIGHTING						1.25	
R	RECEPTACLES	0.4				0.4	10K+50%	0.4
M	MOTORS	10.6	11.3	10.6		32.5	1.00	32.5
LM	LARGEST MOTOR	2.6	2.6	2.6		7.7	1.25	9.6
C	CONTINUOUS						1.25	
N	NON-CONTINUOUS						1.00	
S	SPARE						1.00	
X	NON-COINCIDENT						0.00	
O	OTHER						1.00	
F	FEEDER							
TOTAL KVA (PHASE)		13.5	13.9	13.1		40.5		42.5
TOTAL AMPERES		112.4	115.7	109.4		112.5		117.9
PHASE BALANCE, ABC		A-B	B-C	C-A				
PERCENT		2.9%	5.6%	2.7%				

NOTES:
1. PROVIDE TYPED PANEL DIRECTORY IAW NEC 408.4 TO INCLUDE FINAL LOCATIONS.
2. ALL SPARE BREAKERS TO BE LEFT IN OFF POSITION AT COMPLETION OF JOB.
3. PUMPS ARE NON-COINCIDENT
4. ALL CIRCUIT BREAKERS FEEDING SUB FLOOR UTILITY SPACE EQUIPMENT SHALL BE LOCKABLE.

CONSULTANT :

STATE OF ALASKA 49TH
ERIC W. BRIDGMAN
EE 14247
REGISTERED PROFESSIONAL ENGINEER

PDC INC. ENGINEERS
2700 Gambell Street, Suite 500, Anchorage, Alaska 99503

PROJECT :
MCLAUGHLIN YOUTH CENTER
AIR HANDLING UNIT UPGRADES
PROJECT #14-78C
ANCHORAGE, AK

SHEET TITLE :
ELECTRICAL SYMBOL LEGEND AND ABBREVIATIONS

DESIGN	ED
DRAWN	JS
CHECKED	ED
DATE	06/10/14

PDC PROJECT No. 14003AN

SHEET NUMBER E0.1

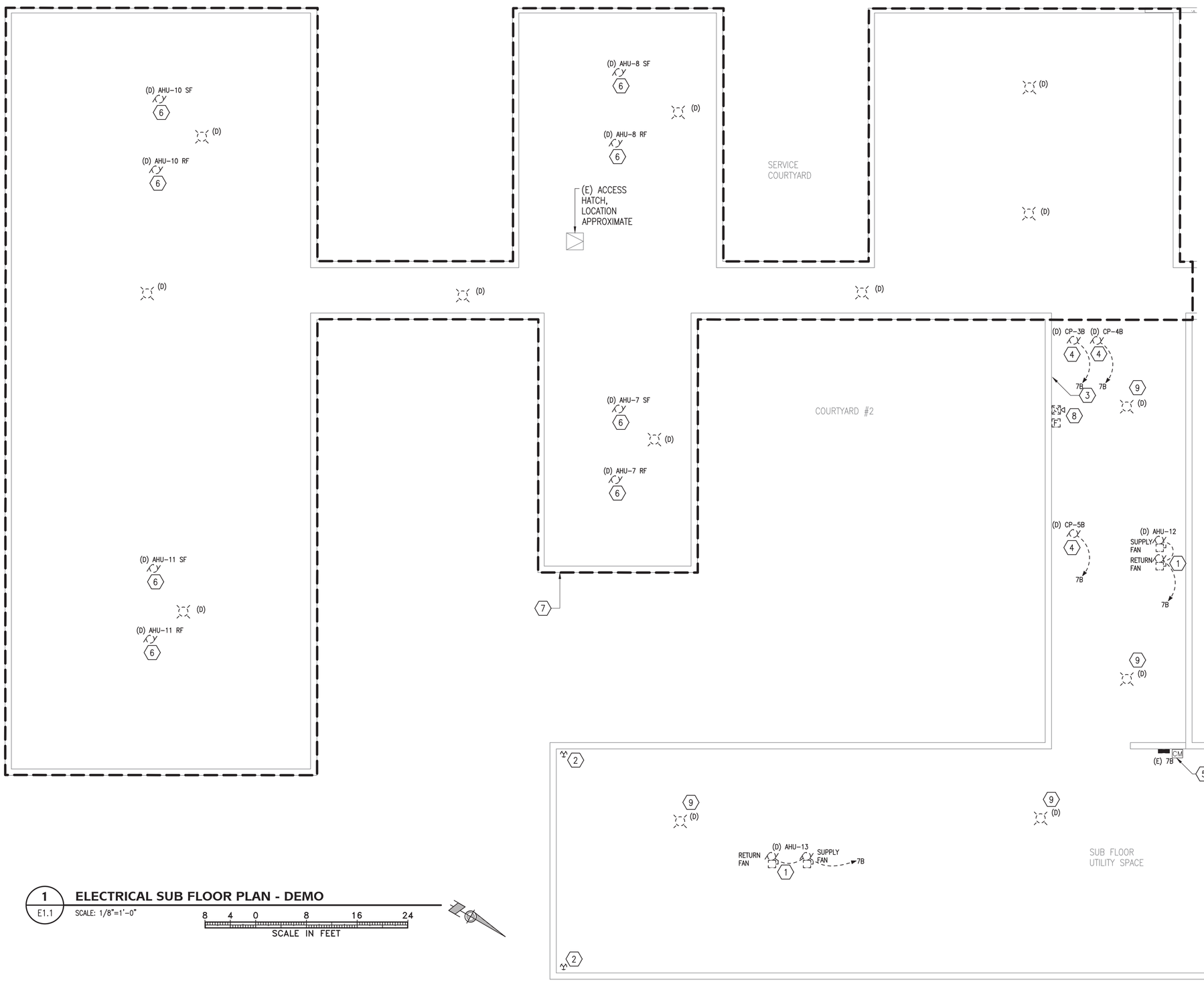

1 E1.1 **ELECTRICAL SUB FLOOR PLAN - DEMO**

SCALE: 1/8"=1'-0"

8 4 0 8 16 24

SCALE IN FEET

SHEET NOTES

1. DEMOLISH ALL POWER CONNECTIONS TO AIR HANDLING UNIT SUPPLY AND RETURN FANS BACK TO SOURCE, INCLUDING ALL CONDUIT, WIRING, DISCONNECTS, J-BOXES, ETC.
2. DEMOLISH ALL POWER CONNECTIONS TO ELECTRIC REHEAT COIL BACK TO SOURCE, INCLUDING ALL CONDUIT, WIRING, DISCONNECTS, J-BOXES, ETC.
3. DEMOLISH EXISTING EMPTY CONDUIT ON THIS WALL TO ACCOMMODATE NEW EQUIPMENT LOCATIONS.
4. DEMOLISH ALL POWER CONNECTIONS TO CIRCULATION PUMP BACK TO SOURCE, INCLUDING ALL CONDUIT, WIRING, DISCONNECTS, J-BOXES, ETC.
5. FIRE ALARM CONTROL MODULES LOCATED ADJACENT TO EXISTING PANEL 7B TO BE MAINTAINED IN SERVICE AFTER COMPLETION OF PROJECT.
6. AHU FAN MOTOR TO BE REPLACED WITH NEW MOTOR OF EQUIVALENT SIZE BY MECHANICAL. DISCONNECT POWER CONNECTION AND SAVE FOR RE-USE. SAVE J-BOX, DISCONNECT SWITCH, ETC. FOR RE-USE. THERMAL OVERLOADS SHALL BE REPLACED MATCHING NEW MOTOR.
7. ADD ALT #3: DEMOLISH ALL LIGHTING IN SUBFLOOR UTILITY SPACE (EXCEPT EXIT LIGHTING) FROM AREA SHOWN. TO INCLUDE ALL LAMPS, FIXTURES, J-BOXES, CONDUIT AND WIRING BACK TO SOURCE, AND ACCESSORIES. ALL LIGHTS TO BE DEMOLISHED MAY NOT BE SHOWN, CONTRACTOR TO FIELD VERIFY QUANTITY.
8. REMOVE AND RELOCATE FIRE ALARM DEVICES FROM APPROXIMATE LOCATION SHOWN, SEE E2.1 AND GENERAL NOTE 6 ON E0.1.
9. DEMOLISH LIGHTS SIMILAR TO NOTE 7 ABOVE.

CONSULTANT :

STATE OF ALASKA 49TH ERIC W. BRIDGMAN EE 14247 REGISTERED PROFESSIONAL ENGINEER

PDC INC. ENGINEERS
2700 Gambell Street, Suite 500, Anchorage, Alaska 99503

PROJECT : MCLAUGHLIN YOUTH CENTER AIR HANDLING UNIT UPGRADES PROJECT #14-78C ANCHORAGE, AK

SHEET TITLE : ELECTRICAL SUB FLOOR PLAN - DEMO

DESIGN	ED
DRAWN	JS
CHECKED	ED
DATE	06/10/14

PDC PROJECT No. 14003AN

SHEET NUMBER E1.1

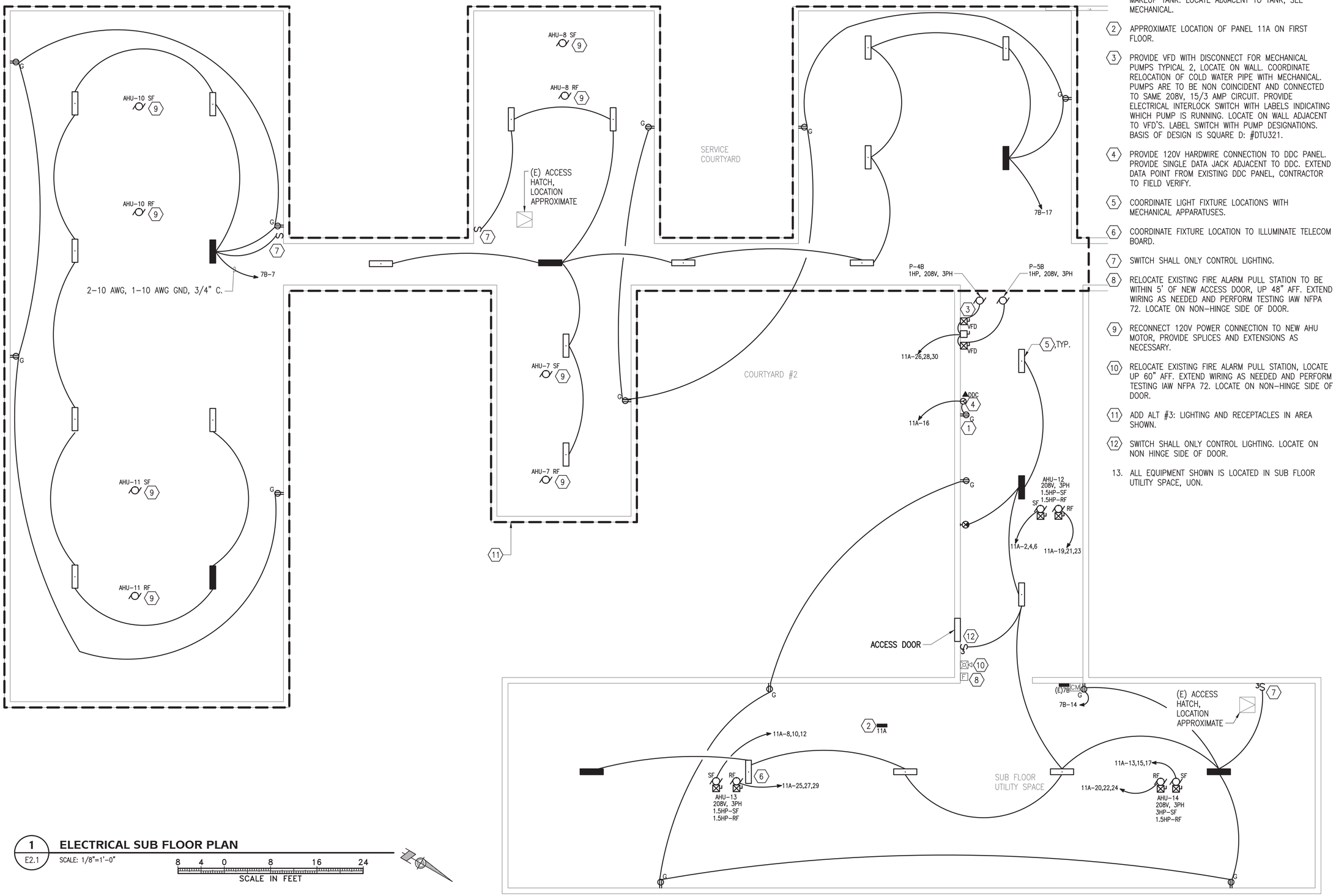

1 E2.1 **ELECTRICAL SUB FLOOR PLAN**

SCALE: 1/8"=1'-0"

8 4 0 8 16 24
SCALE IN FEET

SHEET NOTES

1. PROVIDE GFCI DUPLEX RECEPTACLE FOR GLYCOL MAKEUP TANK. LOCATE ADJACENT TO TANK, SEE MECHANICAL.
2. APPROXIMATE LOCATION OF PANEL 11A ON FIRST FLOOR.
3. PROVIDE VFD WITH DISCONNECT FOR MECHANICAL PUMPS TYPICAL 2, LOCATE ON WALL. COORDINATE RELOCATION OF COLD WATER PIPE WITH MECHANICAL. PUMPS ARE TO BE NON COINCIDENT AND CONNECTED TO SAME 208V, 15/3 AMP CIRCUIT. PROVIDE ELECTRICAL INTERLOCK SWITCH WITH LABELS INDICATING WHICH PUMP IS RUNNING. LOCATE ON WALL ADJACENT TO VFD'S. LABEL SWITCH WITH PUMP DESIGNATIONS. BASIS OF DESIGN IS SQUARE D: #DTU321.
4. PROVIDE 120V HARDWIRE CONNECTION TO DDC PANEL. PROVIDE SINGLE DATA JACK ADJACENT TO DDC. EXTEND DATA POINT FROM EXISTING DDC PANEL, CONTRACTOR TO FIELD VERIFY.
5. COORDINATE LIGHT FIXTURE LOCATIONS WITH MECHANICAL APPARATUSES.
6. COORDINATE FIXTURE LOCATION TO ILLUMINATE TELECOM BOARD.
7. SWITCH SHALL ONLY CONTROL LIGHTING.
8. RELOCATE EXISTING FIRE ALARM PULL STATION TO BE WITHIN 5' OF NEW ACCESS DOOR, UP 48" AFF. EXTEND WIRING AS NEEDED AND PERFORM TESTING IAW NFPA 72. LOCATE ON NON-HINGE SIDE OF DOOR.
9. RECONNECT 120V POWER CONNECTION TO NEW AHU MOTOR, PROVIDE SPLICES AND EXTENSIONS AS NECESSARY.
10. RELOCATE EXISTING FIRE ALARM PULL STATION, LOCATE UP 60" AFF. EXTEND WIRING AS NEEDED AND PERFORM TESTING IAW NFPA 72. LOCATE ON NON-HINGE SIDE OF DOOR.
11. ADD ALT #3: LIGHTING AND RECEPTACLES IN AREA SHOWN.
12. SWITCH SHALL ONLY CONTROL LIGHTING. LOCATE ON NON HINGE SIDE OF DOOR.

13. ALL EQUIPMENT SHOWN IS LOCATED IN SUB FLOOR UTILITY SPACE, UON.

CONSULTANT :

STATE OF ALASKA 49TH
ERIC W. BRIDGMAN
EE 14247
REGISTERED PROFESSIONAL ENGINEER

PDC INC. ENGINEERS
2700 Gambell Street, Suite 500, Anchorage, Alaska 99503

PROJECT :
MCLAUGHLIN YOUTH CENTER
AIR HANDLING UNIT UPGRADES
PROJECT #14-78C
ANCHORAGE, AK

SHEET TITLE :
ELECTRICAL SUB FLOOR PLAN

DESIGN	ED
DRAWN	JS
CHECKED	ED
DATE	06/10/14

PDC PROJECT No.
14003AN

SHEET NUMBER
E2.1

SHEET NOTES

1. LOCATE PANEL 11A ON THIS WALL, INSTALL AS CLOSE TO ADJACENT LIGHT SWITCH AS POSSIBLE. ADJACENT IT EQUIPMENT DOOR SHALL BE ABLE TO BE OPENED AND EQUIPMENT SERVICED AT JOB COMPLETION.
2. ROUTE CONDUIT 18" UNDERGROUND AND UP INTO NEW ENCLOSED CIRCUIT BREAKER.
3. PROVIDE THERMAL SEAL THROUGH BUILDING PENETRATION.

2 E3.1 **PANEL 11A LOCATION - COPIER ROOM 114**

SCALE: NTS

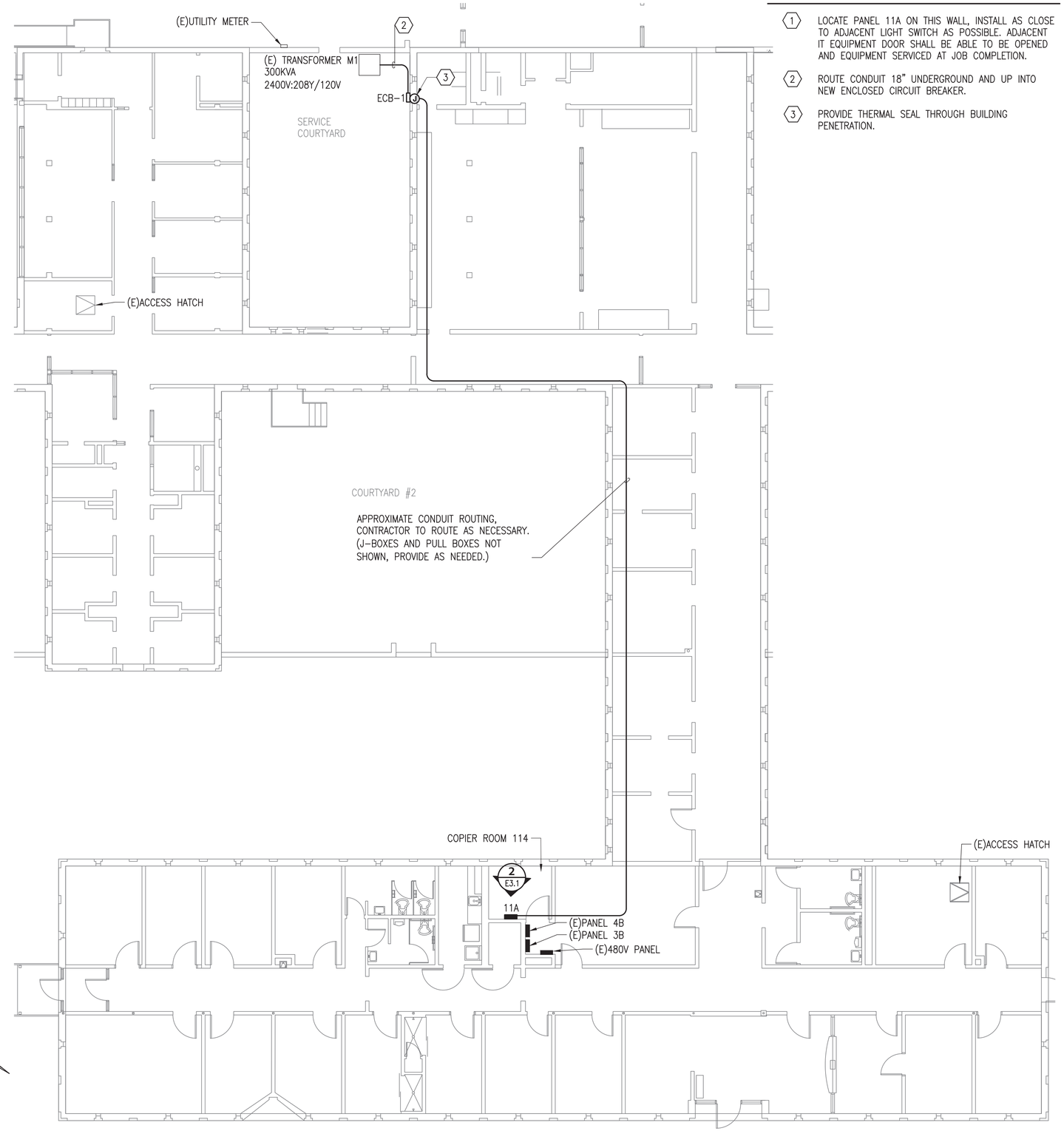

1 E3.1 **ELECTRICAL FIRST FLOOR PLAN**

SCALE: 1/8"=1'-0"

8 4 0 8 16 24

SCALE IN FEET

CONSULTANT :

STATE OF ALASKA 49TH
ERIC W. BRIDGMAN
EE 14247
REGISTERED PROFESSIONAL ENGINEER

PDC INC. ENGINEERS
2700 Gambell Street, Suite 500, Anchorage, Alaska 99503

PROJECT :
MCLAUGHLIN YOUTH CENTER
AIR HANDLING UNIT UPGRADES
PROJECT #14-78C
ANCHORAGE, AK

SHEET TITLE :
ELECTRICAL FIRST FLOOR PLAN

DESIGN	ED
DRAWN	JS
CHECKED	ED
DATE	06/10/14

PDC PROJECT No.
14003AN

SHEET NUMBER
E3.1

P:\2014\14003sm-myc_ah\E\D1102sp14003AN; BRYCE MANN Jun 09, 2014 3:49 PM

SHEET NOTES

(1) APPROXIMATE LOCATION OF PANEL 11A ON FIRST FLOOR.

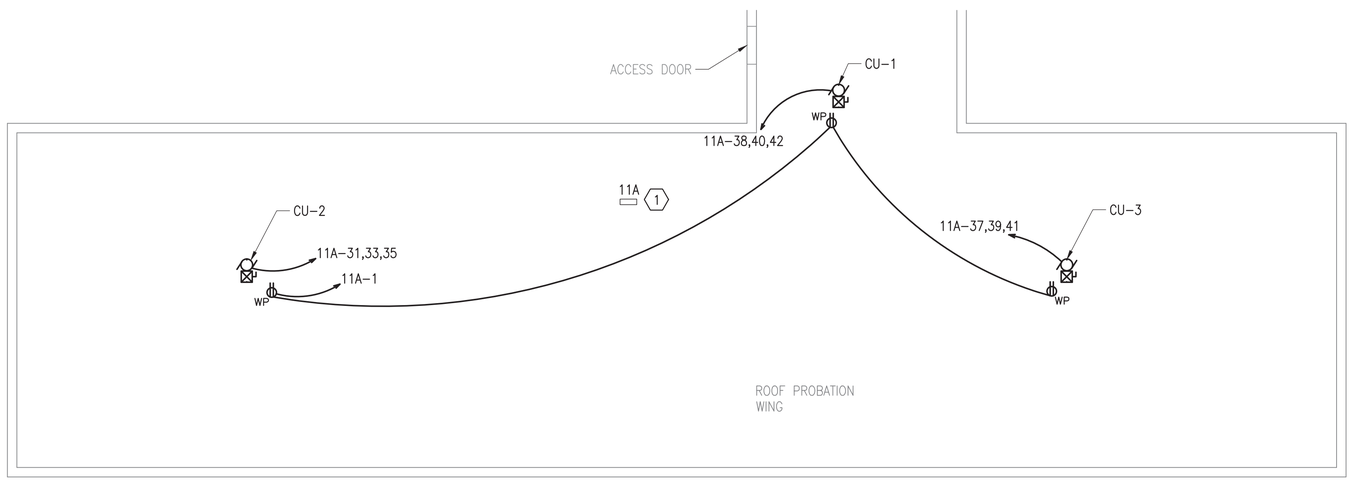

1 E4.1 **ADD ALT #2 - ELECTRICAL ROOF PLAN**

SCALE: 1/8"=1'-0"

8 4 0 8 16 24

SCALE IN FEET

CONSULTANT :

STATE OF ALASKA 49TH
ERIC W. BRIDGMAN
EE 14247
REGISTERED PROFESSIONAL ENGINEER

PDC INC. ENGINEERS
2700 Gambell Street, Suite 500, Anchorage, Alaska 99503

PROJECT :
MCLAUGHLIN YOUTH CENTER
AIR HANDLING UNIT UPGRADES
PROJECT #14-78C
ANCHORAGE, AK

SHEET TITLE :
ADD ALT #2 - ELECTRICAL ROOF PLAN

DESIGN	ED
DRAWN	JS
CHECKED	ED
DATE	06/10/14

PDC PROJECT No.
14003AN

SHEET NUMBER
E4.1

P:\2014\14003an\mpc_elh\EE\D301ep14003AN; BRYCE MANN Jun 09, 2014 3:49 PM

GENERAL

DETAIL SYMBOL — DETAIL IDENTIFICATION: 1; DRAWING ON WHICH DETAIL IS SHOWN: M3.2

SECTION SYMBOL — SECTION IDENTIFICATION: A; DRAWING ON WHICH SECTION IS SHOWN: M3.2

ROOM NAME AND NUMBER DESIGNATION — CORRIDOR 100

SHEET NOTE REFERENCE — 4

GENERAL SHEET NOTE — 3.

EQUIPMENT DESIGNATION, SEE EQUIPMENT SCHEDULE — EF–1

TERMINAL HEATING UNIT DESIGNATION — EQUIPMENT DESIGNATION: UH–1; LINEAL FEET OR MBH OUTPUT: 83; GPM: 7.0

POINT OF CONNECTION

CONSTRUCTION LINETYPES

TO BE DEMOLISHED OR RELOCATED

EXISTING TO REMAIN

NEW WORK

HEATING & COOLING

SUPPLY

RETURN

AUTOMATIC AIR VENT WITH ISOLATION VALVE

TEMPERATURE SENSOR — TS

PRESSURE SWITCH — PS

UNIT HEATER, PLAN — HORIZONTAL, VERTICAL

THERMOSTAT/TEMPERATURE SENSOR — T

DUCT SYMBOLS

SINGLE LINE / DOUBLE LINE

ROUND DUCT, 45° – 90° TEE

ROUND DUCT, 45° TEE

CONICAL TEE; ROUND BRANCH DUCT, ROUND OR RECTANGULAR MAIN DUCT

ROUND OR OVAL, 90° LATERAL TEE

ROUND DUCT, Y–FITTING

ROUND OR OVAL DUCT, 45° ENTRY TEE

RECTANGULAR DUCT, 45° ENTRY TEE

SINGLE LINE / DOUBLE LINE

TRANSITION; ROUND TO OVAL DUCT

TRANSITION; SQUARE TO ROUND DUCT

CONCENTRIC REDUCER; ROUND OR RECTANGULAR

90° ELBOW; RECTANGULAR

90° ELBOW; ROUND OR OVAL

RECTANGULAR DUCT, Y–FITTING

BULLHEAD TEE WITH TURNING VANES

VENTILATION EQUIPMENT SYMBOLS

CENTRIFUGAL FAN

PLENUM/PLUG FAN

COIL

MOTORIZED CONTROL DAMPER — M — PARALLEL, OPPOSED

LOUVER

BACKDRAFT DAMPER

FILTER

VENTILATION

DUCT (1ST FIGURE, SIDE SHOWN 2ND FIGURE, SIDE NOT SHOWN) — 18"X12"

DIRECTION OF FLOW

DUCT WITH INSULATION

DUCT WITH SOUND LINING

SUPPLY DUCT SECTION — (UP) (DN)

RETURN DUCT SECTION — (UP) (DN)

EXHAUST DUCT SECTION — (UP) (DN)

FLEXIBLE CONNECTIONS

VOLUME DAMPER — VD

FIRE DAMPER
SMOKE DAMPER
COMBINATION FIRE/SMOKE DAMPER — FD, SD, FSD

TURNING VANES

PIPE FITTINGS AND VALVES

ELBOW, TURNED DOWN

ELBOW, TURNED UP

ABBREVIATIONS

ACFM	ACTUAL CUBIC FEET PER MINUTE (AT ALTITUDE)	LW	LAB WASTE
		LWT	LEAVING WATER TEMPERATURE
AFF	ABOVE FINISHED FLOOR	MAX	MAXIMUM
AGT	AVERAGE GLYCOL TEMPERATURE	MBH	THOUSAND BTU'S PER HOUR
AHAP	AS HIGH AS POSSIBLE	MCA	MINIMUM CIRCUIT CAPACITY
APPROX	APPROXIMATE	MIN	MINIMUM
AV	ACID VENT	MISC	MISCELLANEOUS
AVTR	ACID VENT THROUGH ROOF	NC	NORMALLY CLOSED
AW	ACID WASTE	NO	NORMALLY OPENED
BTU	BRITISH THERMAL UNIT	NO.	NUMBER
CA	COMPRESSED AIR	O2	OXYGEN
CFM	CUBIC FEET PER MINUTE	OA	OUTSIDE AIR
CIRC	CIRCULATION	OC	ON CENTER
CLNG	CEILING	OFCI	OWNER FURNISHED, CONTRACTOR INSTALLED
CO	CLEANOUT		
CO	CARBON MONOXIDE	ORD	OVERFLOW ROOF DRAIN
CO2	CARBON DIOXIDE	OSA	OUTSIDE AIR
CONT	CONTINUATION, CONTINUED	PCR	PUMPED CONDENSATE RETURN
CR	CONDENSATE RETURN	PD	PRESSURE DROP
CU	COPPER	PDI	PLUMBING AND DRAINAGE INSTITUTE
CW	COLD WATER	PG	PROPYLENE GLYCOL
CWR	CHILLED WATER RETURN	PH	PHASE
CWS	CHILLED WATER SUPPLY	PHC	PRE HEAT COIL
DDC	DIRECT DIGITAL CONTROLS	POC	POINT OF CONNECTION
(D)	DEMOLISH	PSIG	POUNDS PER SQUARE INCH GAUGE
DIA	DIAMETER	PSI	POUNDS PER SQUARE INCH
DHWC	DOMESTIC HOT WATER CIRC	PW	PUMPED WASTE
DN	DOWN	RA	RETURN AIR
(E)	EXISTING	RD	ROOF DRAIN
E/A	EXHAUST AIR	RECIRC	RECIRCULATION
EGT	ENTERING GLYCOL TEMPERATURE	RPBP	REDUCED PRESSURE ZONE
ENT	ENTERING		BACKFLOW PREVENTER
EWT	ENTERING WATER TEMPERATURE	RWL	RAIN WATER LEADER
FCO	FLOOR CLEANOUT	RZ	RADIANT ZONE
FD	FIRE DAMPER	SA	SUPPLY AIR
FSD	FIRE SMOKE DAMPER	SCFM	STANDARD CUBIC FEET PER MINUTE (AT SEA LEVEL)
FM	FORCED MAIN		
FT	FEET	SCH	SCHEDULE
FTS	FOUNDATION FREEZE SUPPLY	SD	SMOKE DAMPER
FFR	FOUNDATION FREEZE RETURN	SD	STORM DRAIN
FOR	FUEL OIL RETURN	SF	SQUARE FEET
FOS	FUEL OIL SUPPLY	SS	STAINLESS STEEL
GAL	GALLONS	TA	TRANSFER AIR
GALV	GALVANIZED	TEMP	TEMPERATURE
GCR	GLYCOL COOLING RETURN	TOH	TOTAL DEVELOPED HEAD
GCS	GLYCOL COOLING SUPPLY	TP	TRAP PRIMER
GHR	GLYCOL HEATING RETURN	TYP.	TYPICAL
GHS	GLYCOL HEATING SUPPLY	UL	UNDERWRITER'S LABORATORY
GPM	GALLONS PER MINUTE	UON	UNLESS OTHERWISE NOTED
HB	HOSE BIB	V	VENT
HC	HEATING COIL	VAV	VARIABLE AIR VOLUME
HP	HORSE POWER	VTR	VENT THROUGH ROOF
HW	HOT WATER	VR	VENT RISER
HWC	HOT WATER CIRCULATION	W	WASTE
HWR	HEATING WATER RETURN	W/	WITH
HWS	HEATING WATER SUPPLY	W.C.	WATER COLUMN
HX	HEAT EXCHANGER	WCO	WALL CLEANOUT
HZ	HERTZ	WHA	WATER HAMMER ARRESTOR
IN	INCHES	WPD	WATER PRESSURE DROP
LAV	LAVATORY	WRT	WITH RESPECT TO
LF	LINEAL FEET		
LGT	LEAVING GLYCOL TEMP		
LVG	LEAVING		

CONSULTANT :

STATE OF ALASKA 49TH CRAIG D. FREDEEN MECH 6/6/14 REGISTERED PROFESSIONAL ENGINEER

PDC INC. ENGINEERS
2700 Gambell Street, Suite 500, Anchorage, Alaska 99503

PROJECT :
MCLAUGHLIN YOUTH CENTER
AIR HANDLING UNIT UPGRADES
PROJECT #14-78C
ANCHORAGE, AK

SHEET TITLE :
MECHANICAL SYMBOL LEGEND

DESIGN	RAW
DRAWN	PJG
CHECKED	CDF
DATE	06/10/14

PDC PROJECT No. 14003AN

SHEET NUMBER M1.1

HEAT EXCHANGER SCHEDULE

TAG	SERIVCE	MBH	TYPE	HOT SIDE FLUID	HOT SIDE EWT °F	HOT SIDE LWT °F	HOT SIDE FLOW (GPM)	HOT SIDE PD (PSI)	COLD SIDE FLUID	COLD SIDE EGT °F	COLD SIDE LGT °F	COLD SIDE FLOW (GPM)	COLD SIDE PD (PSI)	BASIS OF DESIGN	NOTE
HX-1	PROBATION WING	419	BRAZED PLATE	WATER	180	158	42.5	0.5	50% PG	148	170	42.5	0.4	TACO TFP10X20L-60	[1]

NOTES
[1] PROVIDE FLOOR BRACKET

AIR CONDITIONING UNIT SCHEDULE

ITEM	SERVICE	CAPACITY (TONS)	REFRIGERANT	MCA	POWER (V/PH)	BASIS OF DESIGN	NOTE
CU-1	AHU-12	4	R410A	18.8	208/3	LENNOX TSA-048	[1]
CU-2	AHU-13	4	R410A	18.6	208/3	LENNOX TSA-042	[1]
CU-3	AHU-14	5	R410A	21.3	208/3	LENNOX TSA-060	[1]

NOTES:
[1] ADD ALTERNATE #2

PUMP SCHEDULE

TAG	SERVICE	FLOW (GPM)	HEAD (FT)	RPM	FLUID	TYPE	ELECTRICAL DATA HP	V	PH	VFD	BASIS OF DESIGN	NOTE
P-4B	PROBATION WING	42.5	44	3380	50% PG	INLINE	1	208	3	YES	GRUNDFOS UPS 50-160/2	[1]
P-5B	PROBATION WING	42.5	44	3380	50% PG	INLINE	1	208	3	YES	GRUNDFOS UPS 50-160/2	[1]

NOTES
[1] SET TO SPEED 3

GLYCOL MAKE-UP TANK SCHEDULE

TAG	SERVICE	FLUID	VOLUME (GAL)	ELECTRICAL DATA HP/W	V	PH	BASIS OF DESIGN	NOTE
GMT-1	HYDRONIC HEATING	50% P.G.	17	[1]	120	1	AXIOM MF300	

NOTES:
[1] PROVIDE WITH ELECTRIC PLUG FOR A NEMA 5-20R RECEPTACLE OUTLET.

AHU SCHEDULE

TAG	SERVICE	CAPACITY (CFM)	MIN OA (CFM)	TSP/ESP (IN. W.C.)	FAN TYPE	DRIVE	RPM	ELECTRICAL DATA HP	V	PH	VFD	BASIS OF DESIGN	NOTE
AHU-7			2590										
	SUPPLY AIR FAN	2590		(E)/.9	(E)	(E)	(E)	3	208	3	NO	(E)	[3]
	EXHAUST AIR FAN	2590		(E)/.9	(E)	(E)	(E)	3	208	3	NO	(E)	[3]
AHU-8			1775										
	SUPPLY AIR FAN	1775		(E)/.9	(E)	(E)	(E)	2	208	3	NO	(E)	[3]
	EXHAUST AIR FAN	1775		(E)/.9	(E)	(E)	(E)	2	208	3	NO	(E)	[3]
AHU-10			2765										
	SUPPLY AIR FAN	2765		(E)/.9	(E)	(E)	(E)	3	208	3	NO	(E)	[3]
	EXHAUST AIR FAN	2765		(E)/.9	(E)	(E)	(E)	3	208	3	NO	(E)	[3]
AHU-11			2260										
	SUPPLY AIR FAN	2260		(E)/.9	(E)	(E)	(E)	3	208	3	NO	(E)	[3]
	EXHAUST AIR FAN	2260		(E)/.9	(E)	(E)	(E)	3	208	3	NO	(E)	[3]
AHU-12			200									MCQUAY CAH004GHAC	[1] [2]
	SUPPLY FAN	1755		1.8/0.8	DWDI	BELT	1570	1.5	208	3	NO		
	RETURN FAN	1755		0.5/0.3	DWDI	BELT	1687	1.5	208	3	NO		
AHU-13			200									MCQUAY CAH004GHAC	[1] [2]
	SUPPLY FAN	1525		1.8/0.8	DWDI	BELT	1497	1.5	208	3	NO		
	RETURN FAN	1525		0.5/0.3	DWDI	BELT	1525	1.5	208	3	NO		
AHU-14			200									MCQUAY CAH004GHAC	[1] [2]
	SUPPLY FAN	1910		1.8/0.8	DWDI	BELT	1580	3	208	3	NO		
	RETURN FAN	1910		0.5/0.3	DWDI	BELT	1280	1.5	208	3	NO		

NOTES:
[1] PROVIDE WITH REMOVABLE SUPPORTS.
[2] COORDINATE AHU SO THAT UNIT WILL FIT THROUGH A 48"X48" OPENING.
[3] FAN AND MOTOR ASSEMBLY TO BE REPLACED WITH NEW. CONFIGURATION SIMILAR TO DELHI MODEL G12-7N.

COIL SCHEDULE

TAG	SERVICE	CAPACITY (MBH)	AIRFLOW (CFM)	EAT °F	LAT °F	APD (IN. W.C.)	FLUID	FLOW (GPM)	EWT °F	LWT °F	WPD (FT HD)	NOTE
H-1	AHU-12	28.4	1755	55	70	0.1	50% PG	2.1	170	140	3	
H-2	AHU-14	24.7	1525	55	70	0.1	50% PG	1.8	170	140	3	
H-3	AHU-13	30.9	1910	55	70	0.1	50% PG	2.3	170	140	3	
H-4	DUCT	33.0	680	60	105	0.1	50% PG	3.7	170	150	3	[1]
H-5	DUCT	52.2	1075	60	105	0.1	50% PG	5.8	170	150	3	[1]
H-6	DUCT	6.8	140	60	105	0.1	50% PG	0.8	170	150	3	[1]
H-7	DUCT	6.8	140	60	105	0.1	50% PG	0.8	170	150	3	[1]
H-7A	DUCT	28.5	755	60	95	0.1	50% PG	2.1	170	140	3	[1]
H-7B	DUCT	22.1	585	60	95	0.1	50% PG	1.6	170	140	3	[1]
H-7C	DUCT	21.7	575	60	95	0.1	50% PG	1.6	170	140	3	[1]
H-7D	DUCT	25.5	675	60	95	0.1	50% PG	1.9	170	140	3	[1]
H-8	DUCT	35.7	735	60	105	0.1	50% PG	4.0	170	150	3	[1]
H-8A	DUCT	8.5	225	60	95	0.1	50% PG	0.6	170	140	3	[1]
H-8B	DUCT	9.5	250	60	95	0.1	50% PG	0.7	170	140	3	[1]
H-8C	DUCT	32.1	850	60	95	0.1	50% PG	2.4	170	140	3	[1]
H-8D	DUCT	17.0	450	60	95	0.1	50% PG	1.3	170	140	3	[1]
H-9	DUCT	38.4	790	60	105	0.1	50% PG	4.3	170	150	3	[1]
H-10	DUCT	24.3	500	60	105	0.1	50% PG	2.7	170	150	3	[1]
H-11	DUCT	20.2	415	60	105	0.1	50% PG	2.2	170	150	3	[1]
H-12	DUCT	24.1	495	60	105	0.1	50% PG	2.7	170	150	3	[1]
H-13	DUCT	25.5	525	60	105	0.1	50% PG	2.8	170	150	3	[1]
H-14	DUCT	6.8	140	60	105	0.1	50% PG	0.8	170	150	3	[1]
H-15	DUCT	6.8	140	60	105	0.1	50% PG	0.8	170	150	3	[1]
C-1	AHU-12	46.5	1755	76	55	0.9	R410A	N/A	N/A	N/A	N/A	[2]
C-2	AHU-13	40.0	1910	76	55	0.9	R410A	N/A	N/A	N/A	N/A	[2]
C-3	AHU-14	50.5	1525	76	55	1.3	R410A	N/A	N/A	N/A	N/A	[2]

NOTES:
[1] ADD DUCT TRANSITIONS AS REQUIRED
[2] ADD ALTERNATE #2, SPACE FOR COILS IN AHU BASE BID.

EXPANSION TANK SCHEDULE

TAG	SERVICE	TANK VOLUME (GAL)	ACCEPTANCE VOLUME (GAL)	FLUID	PRESSURE (PSIG)	BASIS OF DESIGN	NOTE
ET-1	PROBATION WING	11	5	50% PG	125	TACO PAX42	

NOTES

AIR SEPARATOR SCHEDULE

TAG	SERVICE	FLUID	FLOW (GPM)	MAX HEAD (FT)	SIZE (IN)	BASIS OF DESIGN	NOTE
AS-1	PROBATION WING	50% PG	42.5	4	2.5	SPIROTHERM JUNIOR VSR250	

NOTES:

CONSULTANT :

STATE OF ALASKA 49TH CRAIG D. FREDEEN MF/0394 6/6/14 REGISTERED PROFESSIONAL ENGINEER

PDC INC. ENGINEERS
2700 Gambell Street, Suite 500, Anchorage, Alaska 99503

PROJECT :
MCLAUGHLIN YOUTH CENTER
AIR HANDLING UNIT UPGRADES
PROJECT #14-78C
ANCHORAGE, AK

SHEET TITLE :
MECHANICAL SCHEDULES

DESIGN	RAW
DRAWN	PJG
CHECKED	CDF
DATE	06/10/14

PDC PROJECT No. 14003AN

SHEET NUMBER M1.2

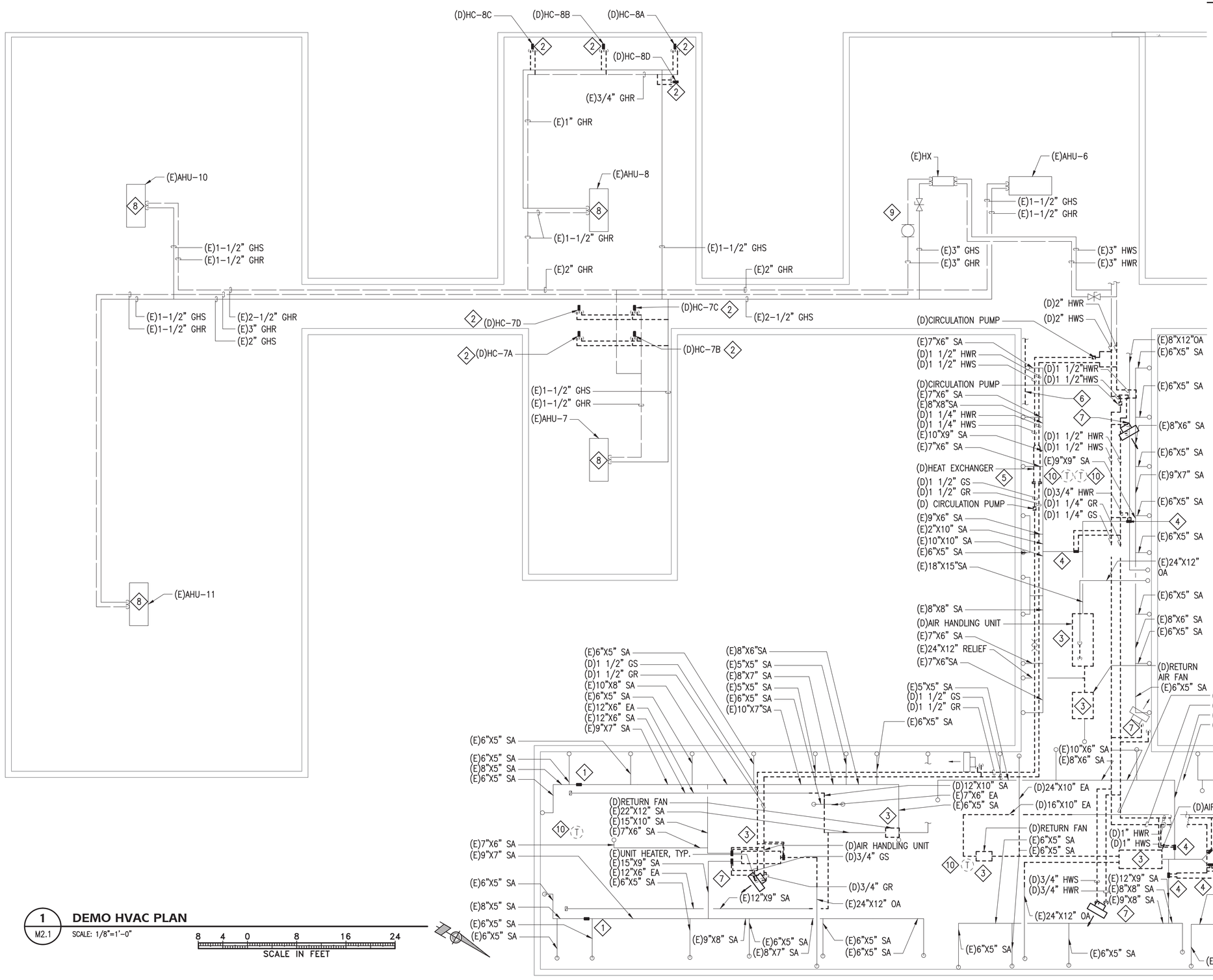

1 **DEMO HVAC PLAN**
M2.1
SCALE: 1/8"=1'-0"

8 4 0 8 16 24
SCALE IN FEET

SHEET NOTES

1. SALVAGE ELECTRIC DUCT HEATING COIL, CONTROLS AND ASSOCIATED APPURTENANCES. DEMO DUCT AS REQUIRED FOR INSTALLATION OF HYDRONIC COILS. COILS AND ASSOCIATED CONTROLS TO BE HANDED OVER TO OWNER.
2. DEMOLISH HYDRONIC HEATING COIL, VALVES AND PIPING BACK TO MAINS. DEMO DUCT CONNECTIONS AS REQUIRED FOR INSTALLATION OF HYDRONIC COILS. CONTROLS TO BE REUSED.
3. DEMO AIR HANDLING UNIT AND RETURN AIR FAN ASSEMBLIES, CONTROLS, AND ALL ASSOCIATED APPURTENANCES. DEMO DUCT CONNECTIONS AS REQUIRED TO FACILITATE INSTALLATION OF EQUIPMENT.
4. DEMO REHEAT COIL, PIPING, VALVES, CONTROLS AND ASSOCIATED APPURTENANCES. DEMO DUCT CONNECTIONS AS REQUIRED FOR INSTALLATION OF COILS.
5. DEMO HEAT EXCHANGER, GLYCOL TANK, PIPING, VALVES, CONTROLS, BRACKETS, AND ALL ASSOCIATED APPURTENANCES.
6. DEMO 1"CW AS REQUIRED FOR INSTALLATION OF ELECTRICAL EQUIPMENT AND EXTERIOR ACCESS.
7. UNIT HEATERS TO REMAIN. DEMO BRANCH PIPING, ISOLATION VALVES AND CONTROLS. REMAINING VALVES TO REMAIN.
8. DEMOLISH PNEUMATIC CONTROL VALVES AND DAMPER ACTUATORS, FAN MOTOR AND FAN ASSEMBLY INCLUDING BEARINGS AND ASSOCIATED SUPPORT STRUCTURE.
9. EXISTING DUPLEX PUMP SETUP.
10. PNUEMATIC THERMOSTAT TO BE DEMOLISHED, LOCATED ON FLOOR ABOVE.
11. DEMO ALL HYDRONIC PIPING AND ASSOCIATED EQUIPMENT (PUMPS, TERMINALS, HEAT EXCHANGERS, ETC.) AS SHOWN.
12. DEMO ALL VENTILATION AND ASSOCIATED EQUIPMENT AS SHOWN.
13. FULL EXTENT OF DEMO MAY NOT BE SHOWN.

CONSULTANT :

STATE OF ALASKA 49TH CRAIG D. FREDEEN 06/09/14 REGISTERED PROFESSIONAL ENGINEER

PDC INC. ENGINEERS
2700 Gambell Street, Suite 500, Anchorage, Alaska 99503

PROJECT : MCLAUGHLIN YOUTH CENTER
AIR HANDLING UNIT UPGRADES
PROJECT #14-78C
ANCHORAGE, AK

SHEET TITLE : DEMO HVAC PLAN

DESIGN	RAW
DRAWN	PJG
CHECKED	CDF
DATE	06/10/14
PDC PROJECT No.	14003AN
SHEET NUMBER	M2.1

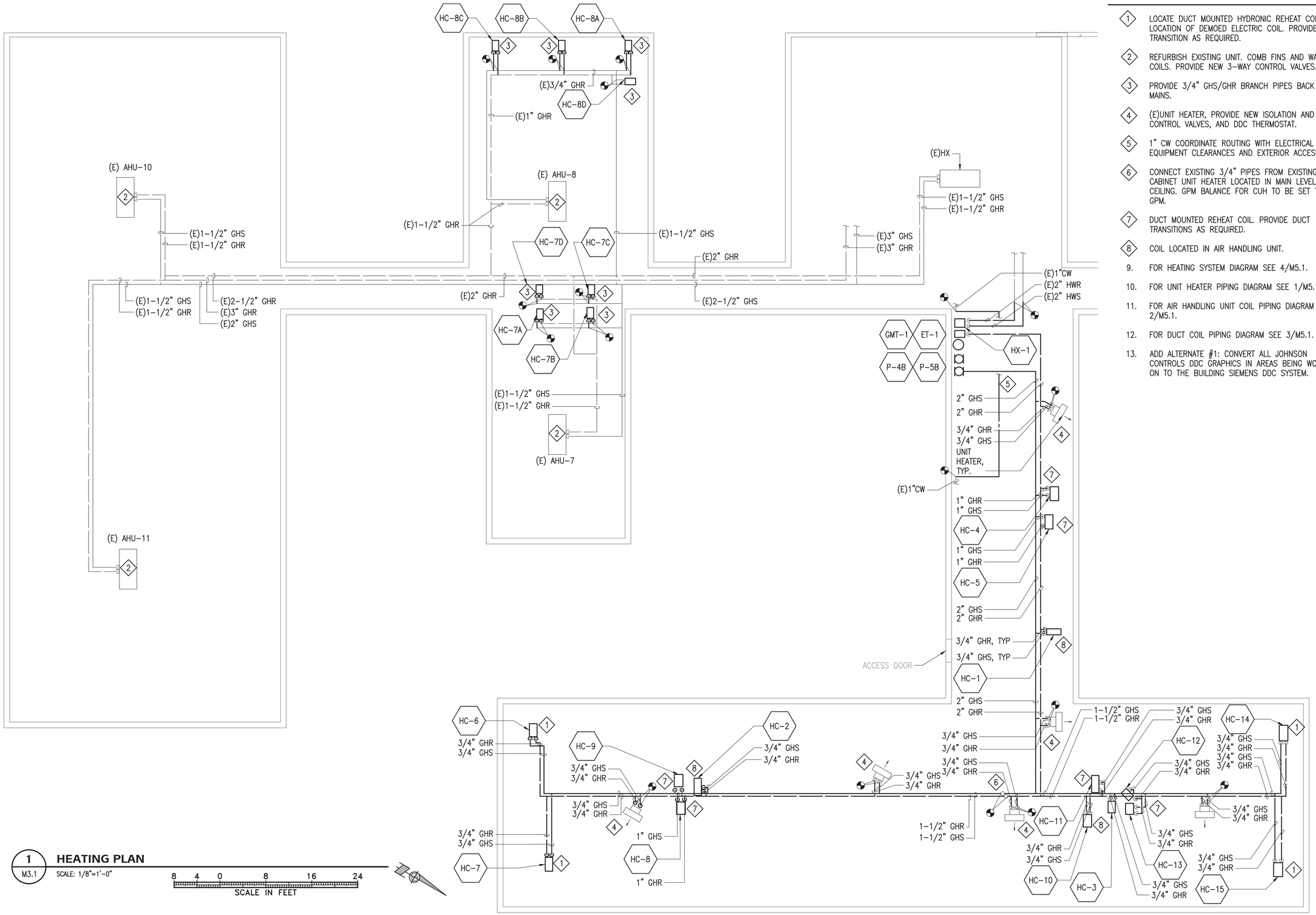

1 M3.1 **HEATING PLAN**

SCALE: 1/8"=1'-0"

8 4 0 8 16 24

SCALE IN FEET

SHEET NOTES

1. LOCATE DUCT MOUNTED HYDRONIC REHEAT COIL IN LOCATION OF DEMOED ELECTRIC COIL. PROVIDE DUCT TRANSITION AS REQUIRED.
2. REFURBISH EXISTING UNIT. COMB FINS AND WASH ALL COILS. PROVIDE NEW 3-WAY CONTROL VALVES.
3. PROVIDE 3/4" GHS/GHR BRANCH PIPES BACK TO MAINS.
4. (E)UNIT HEATER, PROVIDE NEW ISOLATION AND CONTROL VALVES, AND DDC THERMOSTAT.
5. 1" CW COORDINATE ROUTING WITH ELECTRICAL EQUIPMENT CLEARANCES AND EXTERIOR ACCESS.
6. CONNECT EXISTING 3/4" PIPES FROM EXISTING CABINET UNIT HEATER LOCATED IN MAIN LEVEL CEILING. GPM BALANCE FOR CUH TO BE SET TO 2.5 GPM.
7. DUCT MOUNTED REHEAT COIL. PROVIDE DUCT TRANSITIONS AS REQUIRED.
8. COIL LOCATED IN AIR HANDLING UNIT.

9. FOR HEATING SYSTEM DIAGRAM SEE 4/M5.1.
10. FOR UNIT HEATER PIPING DIAGRAM SEE 1/M5.1.
11. FOR AIR HANDLING UNIT COIL PIPING DIAGRAM SEE 2/M5.1.
12. FOR DUCT COIL PIPING DIAGRAM SEE 3/M5.1.
13. ADD ALTERNATE #1: CONVERT ALL JOHNSON CONTROLS DDC GRAPHICS IN AREAS BEING WORKED ON TO THE BUILDING SIEMENS DDC SYSTEM.

CONSULTANT :

STATE OF ALASKA 49TH CRAIG D. FREDEEN M5/03954 6/6/14 REGISTERED PROFESSIONAL ENGINEER

PDC INC. ENGINEERS
2700 Gambell Street, Suite 500, Anchorage, Alaska 99503

PROJECT :
MCLAUGHLIN YOUTH CENTER
AIR HANDLING UNIT UPGRADES
PROJECT #14-78C
ANCHORAGE, AK

SHEET TITLE :
HEATING PLAN

DESIGN	RAW
DRAWN	PJG
CHECKED	CDF
DATE	06/10/14

PDC PROJECT No.
14003AN

SHEET NUMBER
M3.1

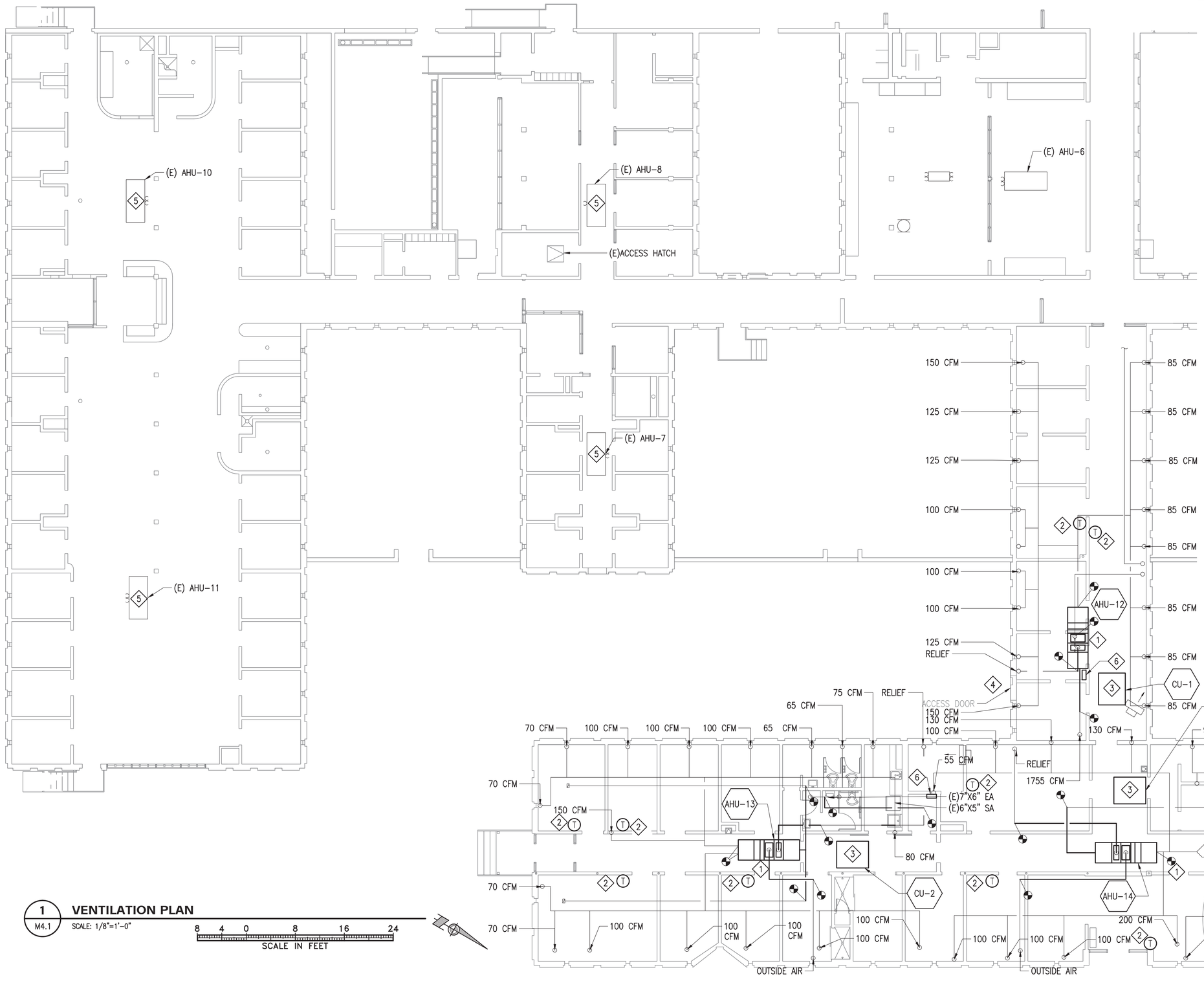

1 M4.1 **VENTILATION PLAN**

SCALE: 1/8"=1'-0"

8 4 0 8 16 24
SCALE IN FEET

SHEET NOTES

1. BALANCE ENTIRE AHU SYSTEM.
2. REPLACE PNEUMATIC THERMOSTAT WITH DDC CONTROLLED THERMOSTAT.
3. ADD ALTERNATE #2: CONDENSING UNIT LOCATED ON ROOF. ROUTE REFRIGERANT LINE SET DOWN IN WALL TO AHU. LOCATE UNIT TO BE AT LEAST 10' FROM EDGE AND ROOF.
4. SUBFLOOR UTILITY SPACE ACCESS, REFER TO ARCHITECTURAL DRAWINGS FOR EXACT LOCATION.
5. REFURBISH EXISTING HEAT RECOVERY AIR HANDLING UNIT. CLEAN INNER CASING, SEAL ALL ABANDONED PENETRATIONS IN THE CABINET AND PROVIDE NEW GASKETS AT FILTER RACKS. PROVIDE NEW FAN AND MOTOR ASSEMBLIES ON VIBRATION ISOLATION STANDS.
6. CHASE FOR CU'S REFRIGERANT PIPING.
7. FOR TYPICAL AIR HANDLING UNIT DIAGRAM SEE 5/M5.1.
8. PROVIDE DUCT TRANSITIONS AS REQUIRED TO CONNECT AHU'S TO (E) SUPPLY, RETURN, OUTSIDE AIR, AND RELIEF AIR DUCTS. SEE SHEET M2.1 FOR (E) DUCT SIZES AND IDENTIFICATION.
9. INSULATE ALL SUPPLY DUCTS IN SUBFLOOR UTILITY SPACE THAT ARE EXPOSED FOR AHU-12, AHU-13, AND AHU-14.
10. THERMOSTATS SHOWN TO BE LOCATED ON MAIN FLOOR, UNLESS OTHERWISE NOTED.
11. UNLESS OTHERWISE NOTED, ALL WORK SHOWN IN SUBFLOOR UTILITY SPACE. MAIN LEVEL WALLS SHOWN FOR REFERENCE.
12. CFM'S FROM ORIGINAL DESIGN DOCUMENTS.

CONSULTANT :

STATE OF ALASKA 49TH CRAIG D. FREDEEN M5/03954 6/6/14 REGISTERED PROFESSIONAL ENGINEER

PDC INC. ENGINEERS
2700 Gambell Street, Suite 500, Anchorage, Alaska 99503

PROJECT :
MCLAUGHLIN YOUTH CENTER
AIR HANDLING UNIT UPGRADES
PROJECT #14-78C
ANCHORAGE, AK

SHEET TITLE :
VENTILATION PLAN

DESIGN	RAW
DRAWN	PJG
CHECKED	CDF
DATE	06/10/14

PDC PROJECT No.
14003AN

SHEET NUMBER
M4.1

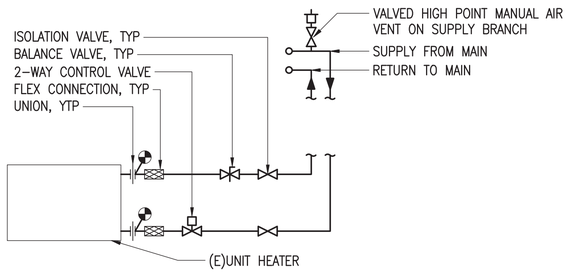

1 M5.1 **UNIT HEATER PIPING DIAGRAM**

SCALE: NTS

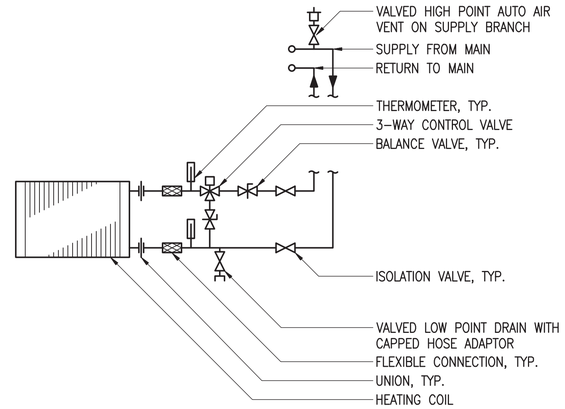

2 M5.1 **AIR HANDLING UNIT HEATING COIL PIPING DIAGRAM**

SCALE: NTS

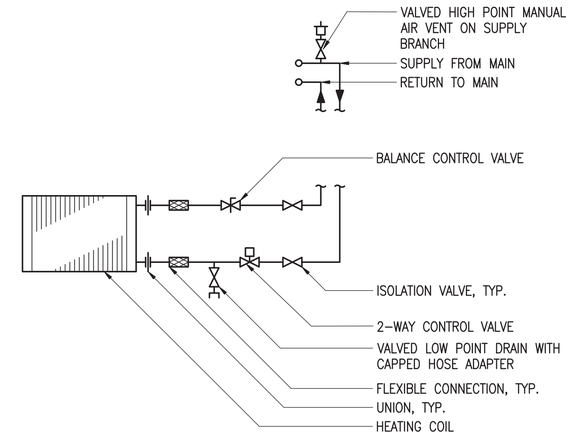

NOTE:PROVIDE DUCT TRANSITION FITTINGS AS REQUIRED

3 M5.1 **DUCT HEATING COIL PIPING DIAGRAM**

SCALE: NTS

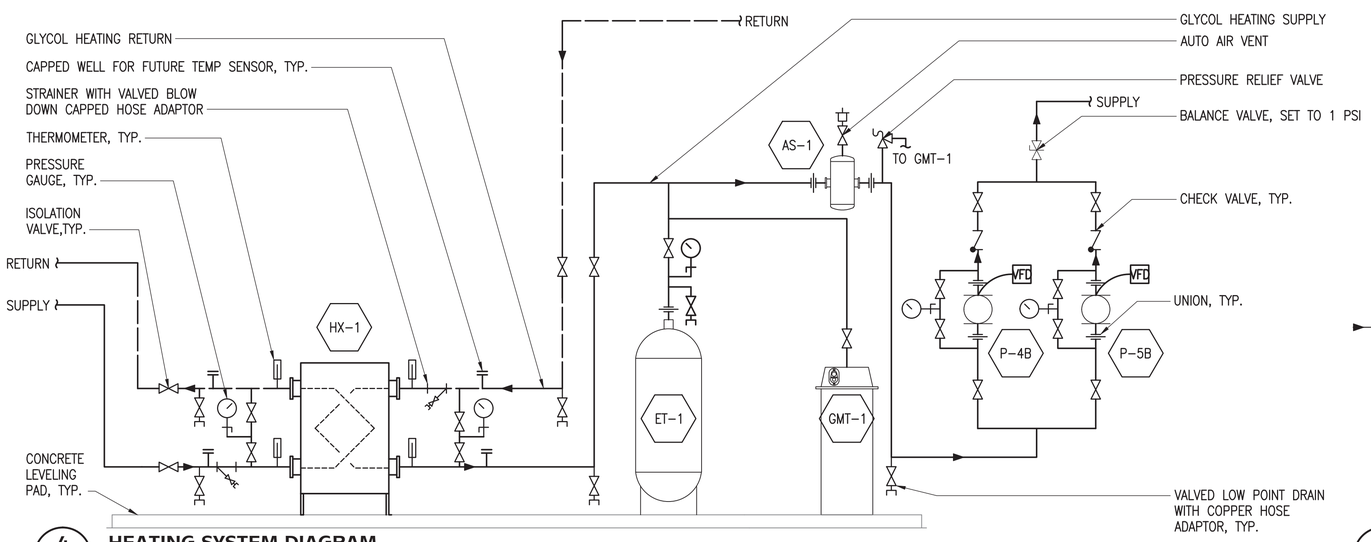

4 M5.1 **HEATING SYSTEM DIAGRAM**

SCALE: NTS

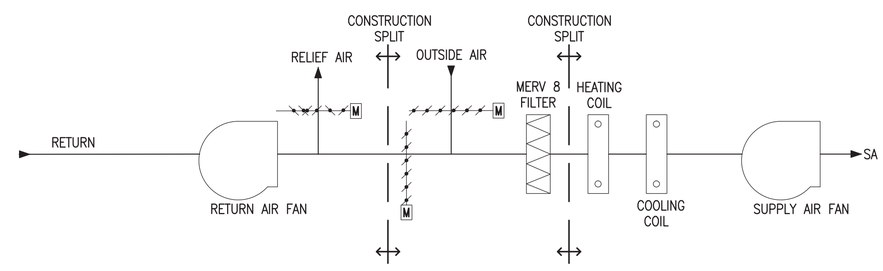

M5.1 **AIR HANDLING UNIT DIAGRAM**

SCALE: NTS

CONSULTANT :

STATE OF ALASKA 49TH CRAIG D. FREDEEN MECHANICAL 6/6/14 REGISTERED PROFESSIONAL ENGINEER

PDC INC. ENGINEERS
2700 Gambell Street, Suite 500, Anchorage, Alaska 99503

PROJECT :
MCLAUGHLIN YOUTH CENTER
AIR HANDLING UNIT UPGRADES
PROJECT #14-78C
ANCHORAGE, AK

SHEET TITLE :
MECHANICAL DIAGRAMS

DESIGN	RAW
DRAWN	PJG
CHECKED	CDF
DATE	06/10/14

PDC PROJECT No.
14003AN

SHEET NUMBER
M.1

P:\2014\14003AN-MYC_AHU\M\M0D01.dwg\14003AN: MICHAEL BARTELL Jun 09, 2014 4:07 PM

P:\2014\14003AN-MYC_AHU\M\M0D01.dwg, 6/9/2014 4:0D:18 PM

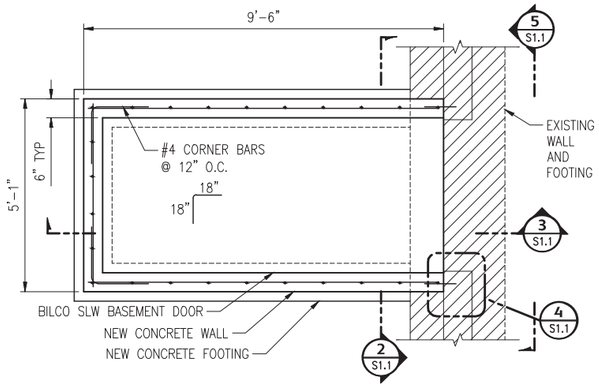

1 / S1.1 ACCESS DOOR PLAN
SCALE: 1/2"=1'-0"

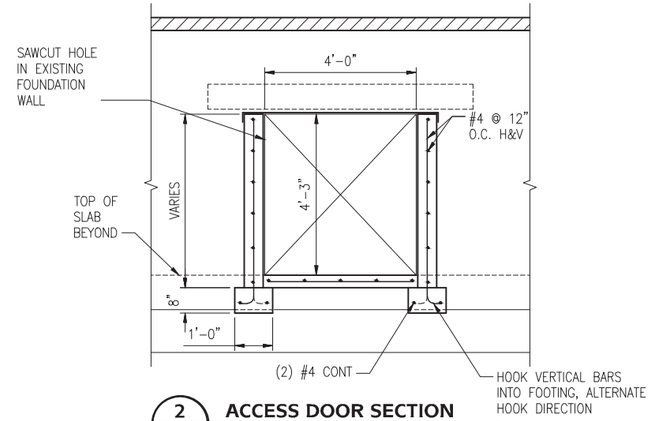

2 / S1.1 ACCESS DOOR SECTION
SCALE: 1/2"=1'-0"

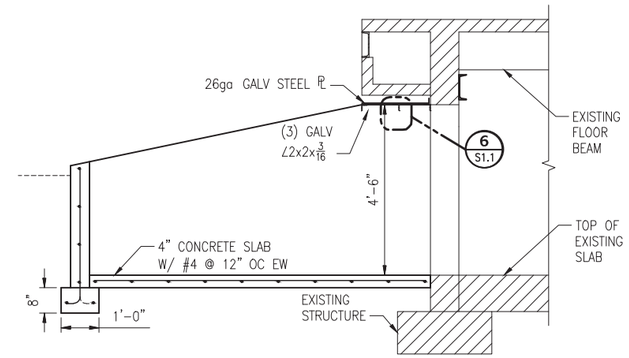

3 / S1.1 ACCESS DOOR SECTION
SCALE: 1/2"=1'-0"

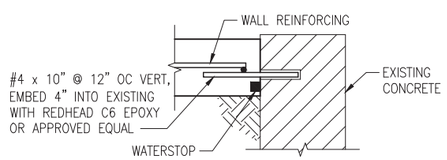

NOTE: PROVIDE SELF-EXPANDING BUTYL STRIP WATERSTOPS AT ALL SURFACES WHERE NEW CONCRETE IS POURED AGAINST EXISTING CONCRETE, PLACE STRIP OUTSIDE OF REBAR

4 / S1.1 TYPICAL REBAR DOWEL
SCALE: 1-1/2" = 1'-0"

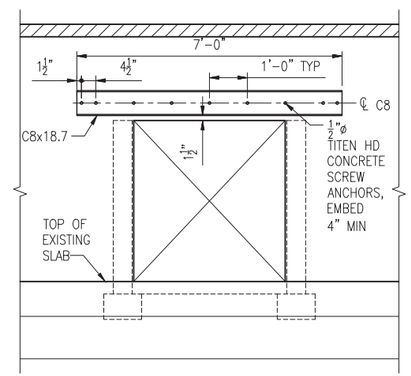

5 / S1.1 ACCESS DOOR SECTION
SCALE: 1/2"=1'-0"

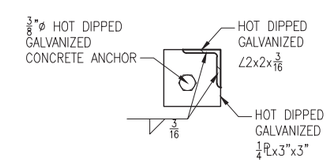

6 / S1.1 ANGLE SUPPPORT
SCALE: 3"=1'-0"

STRUCTURAL CONCRETE NOTES

1. ALL CONCRETE CONSTRUCTION SHALL CONFORM TO CHP 19 OF THE CODE AND THE PROVISIONS IN ACI 318.
2. SUITABLE CONCRETE MIXES SHALL BE PREPARED BY A QUALIFIED TESTING LABORATORY AND APPROVED BY THE ENGINEER OF RECORD. CONCRETE SPECIFIED BY COMPRESSIVE STRENGTH SHALL BE PROPORTIONED ON THE BASIS DESCRIBED IN 1905.1.1 OF THE CODE.
3. SCHEDULE OF CAST-IN-PLACE CONCRETE 28 DAY COMPRESSIVE STRENGTHS AND TYPES:

CONDITION	STRENGTH (PSI)	DENSITY (PCF)	W/C RATIO	AIR ENTRAINMENT
FOUNDATIONS, SLABS AND WALLS	3000	150	0.55	0

4. AGGREGATE FOR HARD-ROCK CONCRETE (150 PCF) SHALL CONFORM TO THE REQUIREMENTS AND TESTS OF ASTM C-33.
5. ALL REINFORCING BARS SHALL BE DEFORMED BAR CONFORMING TO THE STANDARDS OF ASTM A615, GRADE 60.

STRUCTURAL STEEL NOTES

1. ALL STRUCTURAL STEEL SHALL BE CONSISTENT WITH THE FOLLOWING STANDARDS:
   a. STEEL PLATES & MISC . . . . . ASTM A36
2. ALL WELDING ELECTRODES SHALL BE E70XX.
3. ALL DETAILING, FABRICATION AND ERECTION SHALL CONFORM TO AISC SPECIFICATIONS AND CODES, LATEST EDITION.
4. ALL WELDING SHALL BE DONE BY QUALIFIED WELDERS AND SHALL CONFORM TO THE AWS "D1.1 STRUCTURAL WELDING CODE-STEEL", LATEST EDITION.

P:\2014\14003AN-MYC_AHU\S\S010\pdf\14003AN; DON GLUE Jun 09, 2014 5:04 PM

CONSULTANT :

STATE OF ALASKA 49TH DONALD LEE GILLIE CE 13135 REGISTERED PROFESSIONAL ENGINEER 6/9/14

PDC INC. ENGINEERS
2700 Gambell Street, Suite 500, Anchorage, Alaska 99503

PROJECT :
MCLAUGHLIN YOUTH CENTER
AIR HANDLING UNIT UPGRADES
PROJECT #14-78C
ANCHORAGE, AK

SHEET TITLE :
PLANS AND DETAILS

DESIGN	DLG
DRAWN	BAA
CHECKED	DLG
DATE	06/10/14

PDC PROJECT No.
14003AN

SHEET NUMBER
S1.1