DEPARTMENT OF NATURAL RESOURCES
TRUST LAND OFFICE

PARKING LOT EXPANSION
1423 PEGER ROAD
FAIRBANKS, ALASKA

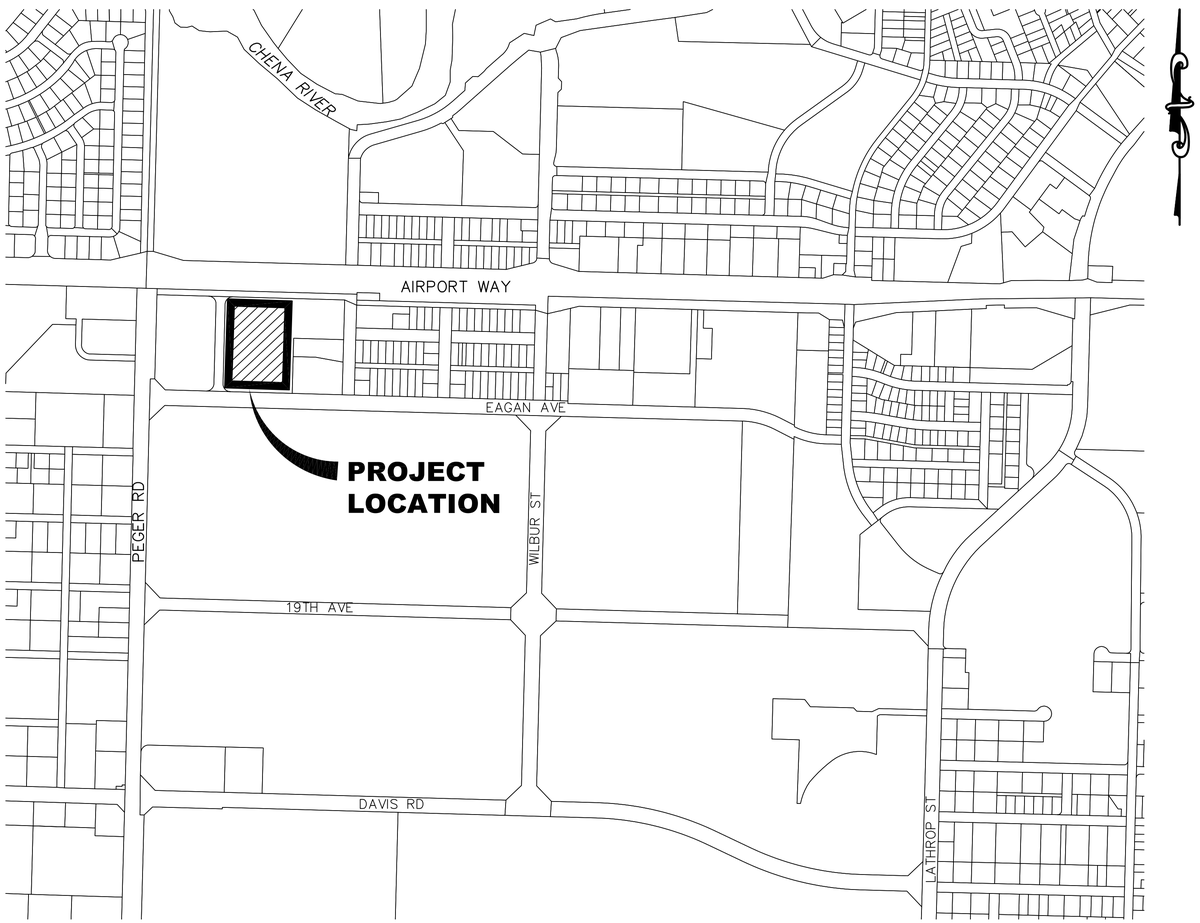

VICINITY MAP
FAIRBANKS, ALASKA

500 0 500 1000 1500
GRAPHIC SCALE

PROJECT SUMMARY:

THE OBJECTIVE OF THIS PROJECT IS TO CONSTRUCT A NEW PARKING LOT AT THE FAHRENKAMP CENTER AT 1423 PEGER ROAD IN FAIRBANKS, ALASKA AND PROVIDE ASSOCIATED SITE LIGHTING AND HEADBOLT HEATER PLUG-IN OUTLETS.

WORK INCLUDES:
- CLEARING AND GRUBBING
- REMOVAL OF CONCRETE SIDEWALK
- EXCAVATE UNSUITABLE MATERIAL
- BACKFILL PARKING LOT WITH SUBBASE AND BASE COURSE MATERIAL
- PAVE PARKING LOT AREA WITH HOT MIX ASPHALT
- PARKING LOT STRIPING
- INSTALL CHAIN LINK FENCE AND GATE
- INSTALL BOLLARDS AND SIGNS
- INSTALL SITE LIGHTING
- INSTALL HEADBOLT HEATER PLUG-INS

DRAWING INDEX

DESCRIPTION	SHEET NO.
COVER SHEET & DRAWING INDEX	G1
GENERAL NOTES, LEGEND, ABBREVIATIONS, & SPECIFICATIONS	G2
EXISTING SITE & DEMOLITION PLAN	C1
PROPOSED SITE & GRADING PLAN	C2
SITE SECTION & DETAILS	C3
ELECTRICAL LEGEND, SCHEDULES AND DETAILS	E1
ELECTRICAL SITE PLAN	E2
ELECTRICAL DETAILS AND ONE-LINE	E3
ELECTRICAL SPECIFICATIONS	E4

STATE OF ALASKA
49 TH
Nicole Knox
No. CE 11896
2/23/2018
REGISTERED PROFESSIONAL ENGINEER

R&M CONSULTANTS, INC.
9101 Vanguard Drive
Anchorage, Alaska 99507
rmconsult.com• email@rmconsult.com
phone: 907.522.1707 • fax: 907.522.3403
CERT OF AUTH: AECC111

STATE OF ALASKA
DEPT. OF NATURAL RESOURCES - TLO
PARKING LOT EXPANSION
1423 PEGER ROAD
FAIRBANKS, ALASKA

No.	Description	Date

Drawn By: CP
Checked By: NK
Date: FEBRUARY 23, 2018
Phase: CONSTRUCTION DOCS
Project No: R&M 2226.04
SHEET TITLE: COVER SHEET & DRAWING INDEX
SHEET NO: G1

Z:\project\2226.04 ADNR TLO Term Fairbanks 1423 Peger Rd Parking Lot Expansion\Civil\ACAD\2226.04-G1 Cover Sheet.dwg
Plotted 2/23/2018 2:50 PM by Nicole Knox

GENERAL NOTES:

1. NO HORIZONTAL OR VERTICAL SURVEY CONTROL WAS LOCATED FOR THIS PROJECT. EXISTING SITE CONDITIONS ARE ESTIMATED BASED ON RECORD DRAWINGS, AS-BUILT DOCUMENTS, AERIAL IMAGERY AND PHOTOGRAPHS. THE CONTRACTOR SHALL VERIFY DIMENSIONS, LOCATIONS, AND GRADING PRIOR TO CONSTRUCTION.
2. NO GEOTECHNICAL SOILS INVESTIGATION WAS PERFORMED FOR THIS PROJECT. UNSUITABLE SOILS, INCLUDING FROST-SUSCEPTABLE AND ORGANIC MATERIALS, SHALL BE REMOVED PRIOR TO BACKFILLING.
3. DEWATERING WILL BE REQUIRED FOR ANY EXCAVATIONS THAT ENCOUNTER GROUND WATER SURFACE. ALL COSTS RELATED TO DEWATERING ARE THE CONTRACTOR'S RESPONSIBILITY.
4. ALL EXCAVATIONS SHALL CONFORM TO CURRENT FEDERAL, STATE AND LOCAL REGULATIONS.
5. COORDINATE AND OBTAIN ALL NECESSARY PERMITS NOT PROVIDED IN THE BID DOCUMENTS PRIOR TO BEGINNING CONSTRUCTION.
6. THE CONTRACTOR IS RESPONSIBLE FOR SEDIMENT AND EROSION CONTROL. BEST MANAGEMENT PRACTICES (BMPS) MUST BE IN PLACE TO MINIMIZE EROSION AND MITIGATE POTENTIAL SEDIMENT AND OTHER POLLUTANTS SUSPENDED IN STORMWATER FROM EXITING THE SITE. BMPS MUST BE MAINTAINED AND INSPECTED REGULARLY AND REPLACED AS NEEDED. PLEASE CONSULT THE ALASKA CONSTRUCTION GENERAL PERMIT (2016 CGP, AKR100000) FOR GUIDANCE.
7. FOLLOW ALL APPLICABLE REGULATIONS FOR NOISE, HOURS OF OPERATION, AND DUST CONTROL.
8. UNDERGROUND UTILITIES MAY EXIST IN THE AREA THAT ARE NOT SHOWN ON THE PLANS. THE CONTRACTOR IS RESPONSIBLE FOR OBTAINING UTILITY LOCATES PRIOR TO EXCAVATION. COORDINATE WITH THE FACILITY OWNER AND THE 811 ALASKA DIGLINE TO LOCATE UNDERGROUND UTILITIES.
9. NO OVER EXCAVATION OR MINING OF MATERIALS IS ALLOWED UNLESS APPROVED IN WRITING BY THE OWNER.
10. ALL DAMAGE TO THE PROPERTY THAT IS CAUSED BY OR THAT RESULTS FROM CARRYING OUT THE WORK, OR FROM ANY ACT, OMISSION, OR NEGLECT OF THE CONTRACTOR, HIS SUBCONTRACTORS, OR HIS EMPLOYEES, SHALL PROMPTLY BE REMEDIED BY THE CONTRACTOR EITHER BY REPAIRING, REBUILDING, OR REPLACING OF THE PROPERTY DAMAGED OR IN SOME OTHER MANNER SATISFACTORY TO THE STATE OF ALASKA DEPARTMENT OF NATURAL RESOURCES (DNR).
11. SUBMIT A WORK PLAN IN WRITING TO THE OWNER'S REPRESENTATIVE NOT LESS THAN FIVE (5) DAYS PRIOR TO COMMENCING CONSTRUCTION OPERATIONS, OR WHENEVER THE CONTRACTOR PROPOSES TO CHANGE CONSTRUCTION METHODS. PROVIDE A WORK PLAN WITH INFORMATION ON SAFEGUARDS AND PROTECTION AROUND AND IN THE VICINITY OF ALL EXCAVATIONS AS MAY BE NECESSARY TO PREVENT DAMAGE TO PROPERTY, INCLUDING (BUT NOT LIMITED TO): SHORING; PLACEMENT OF FILL; STOCKPILE AND DISPOSAL OF TRENCH EXCAVATION; IMPORT/ EXPORT SCHEDULE AND PLAN (INCLUDING TRAFFIC CONTROL); ETC. THE WORK PLAN IS FOR CONSTRUCTION PURPOSES AND ITS SUBMITTAL TO AND REVIEW BY THE ENGINEER DOES NOT ABSOLVE THE CONTRACTOR OF RESPONSIBILITY OF FEDERAL, STATE, AND LOCAL REGULATIONS.

CIVIL CONSTRUCTION SPECIFICATIONS AND MATERIALS:

1. ALL WORK PERFORMED AND MATERIALS FURNISHED FOR THIS PROJECT WILL CONFORM TO THE ALASKA DEPARTMENT OF TRANSPORTATION AND PUBLIC FACILITIES STANDARD SPECIFICATIONS FOR HIGHWAY CONSTRUCTION (ASSHC), 2017 EDITION, UNLESS OTHERWISE SPECIFIED ON THE PLANS OR APPROVED BY THE ENGINEER.
2. FURNISH ALL MATERIALS REQUIRED TO COMPLETE THE WORK.
3. SUBBASE IS SOIL THAT CONFORMS TO THE REQUIREMENTS OF "SELECTED MATERIAL TYPE A" IN SECTION 703-2.07 OF ASSHC (2017).
4. BASE COURSE IS AGGREGATE THAT CONFORMS TO THE REQUIREMENTS OF "BASE COURSE, GRADING D-1" IN SECTION 703-2.03 OF ASSHC (2017).
5. HOT MIX ASPHALT SHALL CONFORM TO THE REQUIREMENTS OF HOT MIX ASPHALT (HMA), TYPE II, CLASS B AS SPECIFIED IN SECTION 401-2.09 OF ASSHC (2017).
6. CONCRETE MIX DESIGN SHALL CONFORM TO THE REQUIREMENTS OF "CLASS W" IN SECTION 501-3.01 OF ASSHC (2017).
7. SEPARATION GEOTEXTILE FABRIC SHALL CONFORM TO THE REQUIREMENTS OF SECTION 729-2.01 OF ASSHC (2017).

ALASKA DOT&PF STANDARD DETAILS:

F-01.03 CHAIN LINK FENCE

F-03.02 CHAIN LINK FENCE GATE

LINE, SYMBOL, AND HATCH LEGEND

PROPOSED	EXISTING	
→		FLOW DIRECTION
		LIGHT POLE
		HEAD BOLT OUTLET
		ASPHALT PAVEMENT

ABBREVIATIONS

AC	ASPHALT CONCRETE
APPROX	APPROXIMATE
ASPH	ASPHALT CONCRETE PAVEMENT
CONC	CONCRETE
DIA	DIAMETER
DOT&PF	ALASKA DEPARTMENT OF TRANSPORTATION AND PUBLIC FACILITIES
EOP	EDGE OF PAVEMENT
EXIST	EXISTING
FG	FINISH GRADE
FT	FEET
GB	GRADE BREAK
INV	INVERT
LF	LINEAL FEET
LT	LEFT
MAX	MAXIMUM
M.E.	MATCH EXISTING
MIN	MINIMUM
N	NORTHING
NTS	NOT TO SCALE
O.C.	ON CENTER
RAD	RADIUS
ROW	RIGHT OF WAY
RT	RIGHT
SQ	SQUARE
SF	SQUARE FEET
SY	SQUARE YARDS
STA	STATION
SWLK	SIDEWALK
TYP	TYPICAL
W/	WITH

LOCATE CALL CENTER OF ALASKA, INC.
STATEWIDE (TOLL FREE) 1-800-478-3121
CALL BEFORE YOU DIG

CALL BEFORE YOU DIG!

LOCATE CALL CENTER
STATEWIDE 811
OR 800-478-3121

STATE OF ALASKA 49TH
Nicole Knox
No. CE 11896
2/23/2018
REGISTERED PROFESSIONAL ENGINEER

R&M CONSULTANTS, INC.
9101 Vanguard Drive
Anchorage, Alaska 99507
rmconsult.com• email@rmconsult.com
phone: 907.522.1707 • fax: 907.522.3403
CERT OF AUTH: AECC111

STATE OF ALASKA
DEPT. OF NATURAL RESOURCES - TLO
PARKING LOT EXPANSION
1423 PEGER ROAD
FAIRBANKS, ALASKA

No.	Description	Date

Drawn By: CP
Checked By: NK
Date: FEBRUARY 23, 2018
Phase: CONSTRUCTION DOCS
Project No: R&M 2226.04
SHEET TITLE: GENERAL NOTES, LEGEND, ABBREVIATIONS & SPECIFICATIONS
SHEET NO: G2

Z:\project\2226.04 ADNR TLO Term Fairbanks 1423 Peger Rd Parking Lot Expansion\Civil\ACAD\2226.04-G2 Notes.dwg
Plotted 2/23/2018 2:40 PM by Nicole Knox

0 10 20
SCALE IN FEET

DEMOLITION PLAN NOTES:

1. ALL ITEMS SCHEDULED FOR DEMOLITION WILL BE REMOVED FROM THE PROJECT SITE AND SHALL BE PROPERLY DISPOSED OF BY THE CONTRACTOR UNLESS NOTED OTHERWISE.
2. OWNER RESERVES THE RIGHT TO SALVAGE ITEMS FROM THE SITE PRIOR TO CONTRACTOR MOBILIZATION AND DURING DEMOLITION. CONTRACTOR TO NOTIFY OWNER 72-HOURS PRIOR TO SITE MOBILIZATION.
3. VERIFY EXISTING SITE CONDITIONS AND ALL DEMOLITION ITEMS WITH THE OWNER.
4. THE CONTRACTOR IS RESPONSIBLE FOR THE DEMOLITION AND REMOVAL OF ALL EXISTING ITEMS NECESSARY FOR COMPLETION OF THE WORK.
5. THE CONTRACTOR IS RESPONSIBLE FOR ALL UTILITY LOCATES.
6. BURNING OF BRUSH, TREES, OR ANY MATERIAL ON DNR TLO PROPERTY IS NOT AUTHORIZED.
7. CLEARING AND GRUBBING LIMIT CORRESPONDS TO 10 FT OFFSET FROM NEW EDGE OF PAVEMENT (SEE SHEET C2). VERIFY LIMITS OF DEMOLITION AND CLEARING AND GRUBBING WITH ENGINEER PRIOR TO WORK.
8. COORDINATE WITH TLO FACILITIES MANGER FOR LOCATION TO STORE SALVAGED CONNEX.

DEMOLITION ITEMS:

CLEARING AND GRUBBING

CONCRETE DEMOLITION

FENCING DEMOLITION

STATE OF ALASKA
49 TH
Nicole Knox
No. CE 11896
2/23/2018
REGISTERED PROFESSIONAL ENGINEER

R&M CONSULTANTS, INC.
9101 Vanguard Drive
Anchorage, Alaska 99507
rmconsult.com• email@rmconsult.com
phone: 907.522.1707 • fax: 907.522.3403
CERT OF AUTH: AECC111

STATE OF ALASKA
DEPT. OF NATURAL RESOURCES - TLO
PARKING LOT EXPANSION
1423 PEGER ROAD
FAIRBANKS, ALASKA

No.	Description	Date

Drawn By: CP
Checked By: NK
Date: FEBRUARY 23, 2018
Phase: CONSTRUCTION DOCS
Project No: R&M 2226.04
SHEET TITLE: EXISTING SITE & DEMO PLAN
SHEET NO: C1

Z:\project\2226.04 ADNR TLO Term Fairbanks 1423 Peger Rd Parking Lot Expansion\Civil\ACAD\2226.04-C1 Demo Plan.dwg
Plotted 2/23/2018 2:41 PM by Nicole Knox

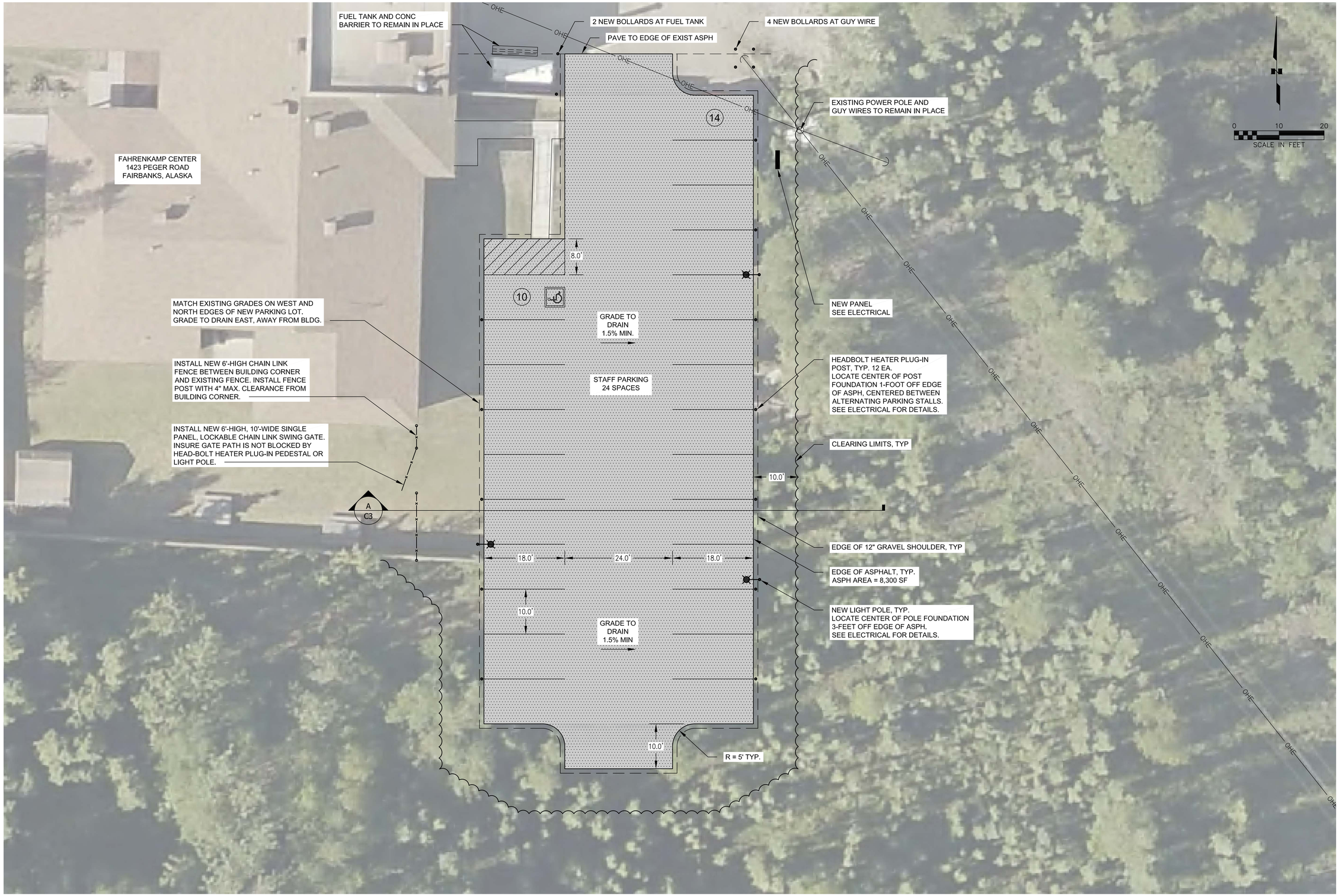

Z:\project\2226.04 ADNR TLO Term Fairbanks 1423 Peger Rd Parking Lot Expansion\Civil\ACAD\2226.04-C2 Site Plan.dwg

Plotted 2/23/2018 2:42 PM by Nicole Knox

STATE OF ALASKA
49 TH
Nicole Knox
No. CE 11896
2/23/2018
REGISTERED PROFESSIONAL ENGINEER

R&M CONSULTANTS, INC.
9101 Vanguard Drive
Anchorage, Alaska 99507
rmconsult.com• email@rmconsult.com
phone: 907.522.1707 • fax: 907.522.3403
CERT OF AUTH: AECC111

STATE OF ALASKA
DEPT. OF NATURAL RESOURCES - TLO

PARKING LOT EXPANSION
1423 PEGER ROAD
FAIRBANKS, ALASKA

No.	Description	Date

Drawn By: CP	Checked By: NK
Date: FEBRUARY 23, 2018	
Phase: CONSTRUCTION DOCS	
Project No: R&M 2226.04	

SHEET TITLE:
PROPOSED SITE & GRADING PLAN

SHEET NO:
C2

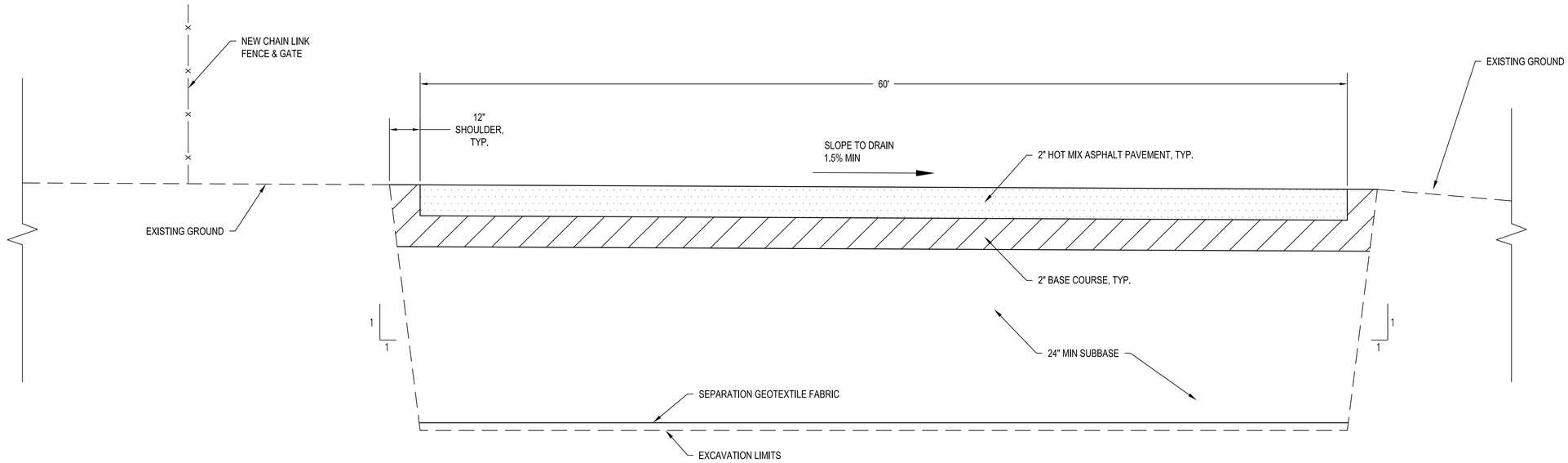

A / C3 TYPICAL SECTION - PARKING LOT EXPANSION

NTS

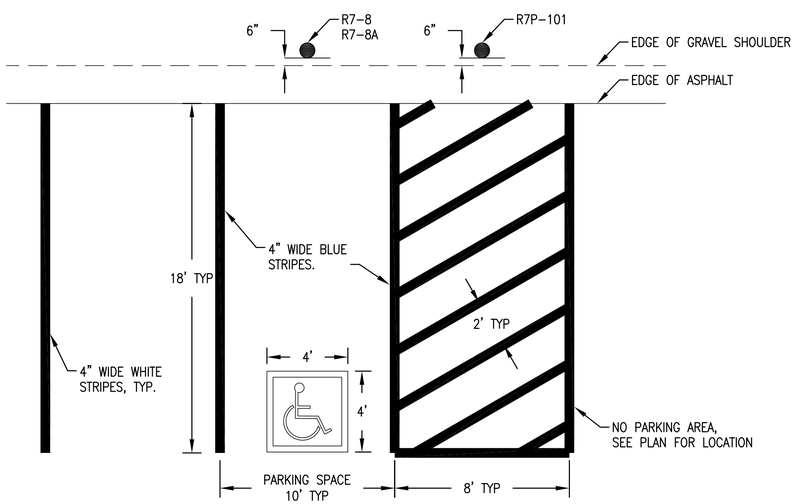

1 / C3 PARKING SPACE MARKING DETAIL

NTS

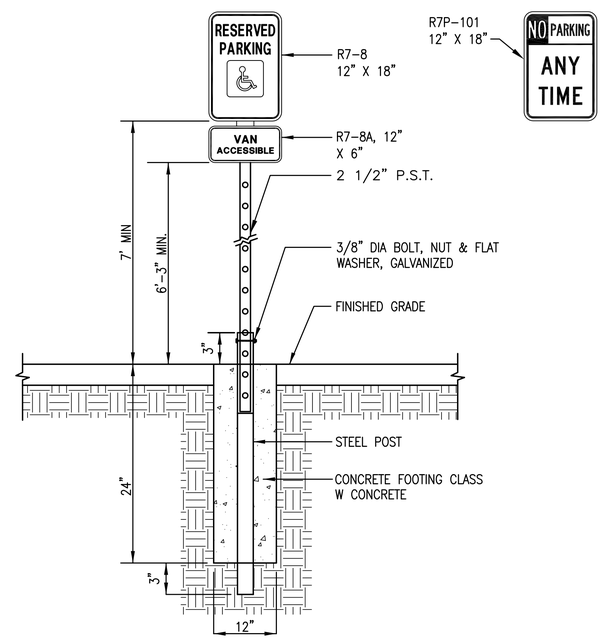

2 / C3 SIGN POST AND FOUNDATION DETAIL

NTS

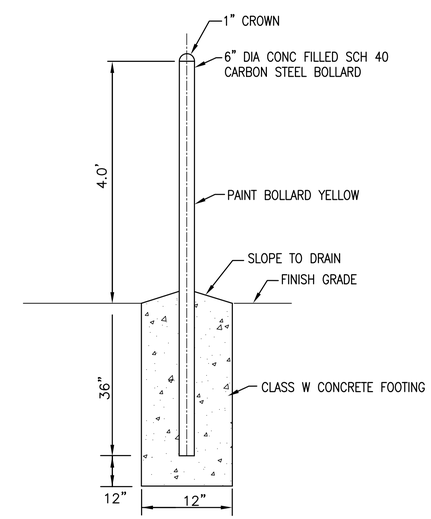

3 / C3 BOLLARD DETAIL

NTS

NOTE:

1. DIMENSIONS ARE FROM CENTER OF STRIPE TO CENTER OF STRIPE.
2. SEE PLAN FOR PARKING SPACE LAYOUT.
3. MAXIMUM 2% GRADE AT ACCESSIBLE PARKING SPACE AND ADJACENT AISLE.

ACCESSIBLE PARKING SIGN NOTES:

1. SIGNS SHALL NOT BE MOUNTED MORE THAN 10 FEET FROM THE EDGE OF THE PARKING STALL.
2. ACCESSIBLE PARKING SIGNAGE SHALL BE CENTERED ON 10 FOOT PARKING STALL.
3. INSTALL A "NO PARKING" SIGN CENTERED ON THE 8 FOOT WIDE VAN ACCESSIBLE ACCESS AISLE.

STATE OF ALASKA 49TH
Nicole Knox
No. CE 11896
2/23/2018
REGISTERED PROFESSIONAL ENGINEER

R&M CONSULTANTS, INC.
9101 Vanguard Drive
Anchorage, Alaska 99507
rmconsult.com• email@rmconsult.com
phone: 907.522.1707 • fax: 907.522.3403
CERT OF AUTH: AECC111

STATE OF ALASKA
DEPT. OF NATURAL RESOURCES - TLO
PARKING LOT EXPANSION
1423 PEGER ROAD
FAIRBANKS, ALASKA

No.	Description	Date

Drawn By: CP
Checked By: NK
Date: FEBRUARY 23, 2018
Phase: CONSTRUCTION DOCS
Project No: R&M 2226.04
SHEET TITLE: SITE SECTION & DETAILS
SHEET NO: C3

Z:\project\2226.04 ADNR TLO Term Fairbanks 1423 Peger Rd Parking Lot Expansion\Civil\ACAD\2226.04-C3 Site Section.dwg

Plotted 2/23/2018 2:42 PM by Nicole Knox

LIGHTING FIXTURE SCHEDULE

KEY	LAMPS NO.	LAMPS TYPE	LAMPS COLOR TEMP.	ENERGY EFFICIENCY	LUMEN PER FIXTURE	MOUNT	DESCRIPTION	MANUFACTURERS NO.
A/120		LED	3000K	114L/WATT	13145L	POLE MOUNT	OUTDOOR POLE MOUNT AREA LIGHT. ALUMINUM CONSTRUCTION. TYPE II DISTRIBUTION. PROVIDE HOUSE SIDE SHIELD. PROVIDE 25 FOOT ROUND TAPERED ALUMINUM POLE.	HUBBELL OUTDOOR LIGHTING: ASL-24L-2 SPAULDING POLE: RTA-25-70-B-AX-BL

PANEL: HBH

PROJECT: DNR PARKING
LOCATION: PARKING LOT
VOLTAGE: 208Y/120 VOLT

MOUNTING: ☒ SURFACE ☐ FLUSH
MAINS: ☒ LUGS ☐ CB
OPTIONS: ☐ FEEDTHRU ☐ SHUNT TRIP ☐ ISO GND BAR ☐ SUBFEED LUG ☐ SUBFEED BRKR ☑ SOLID NEUTRAL

3 PHASE 4 WIRE **100** A MLO **10k** AIC

CIRCUIT DESCRIPTION	KVA	AMP	P	CKT	CKT	AMP	P	KVA	CIRCUIT DESCRIPTION
HBH	1.2	20	1	1	2	20	1	1.2	HBH
HBH	1.2	20	1	3	4	20	1	1.2	HBH
HBH	1.2	20	1	5	6	20	1	1.2	HBH
HBH	1.2	20	1	7	8	20	1	1.2	HBH
HBH	1.2	20	1	9	10	20	1	1.2	HBH
HBH	1.2	20	1	11	12	20	1	1.2	HBH
HBH	1.2	20	1	13	14	20	1	1.2	HBH
HBH	1.2	20	1	15	16	20	1	1.2	HBH
HBH	1.2	20	1	17	18	20	1	1.2	HBH
HBH	1.2	20	1	19	20	20	1	1.2	HBH
HBH	1.2	20	1	21	22	20	1	1.2	HBH
HBH	1.2	20	1	23	24	20	1	1.2	HBH
HBH CONTROL	1.0	20	1	25	26	20	2	0.4	PARKING LOT LIGHTING
SPARE		20	1	27	28				
SPACE				29	30				SPACE
SPACE				31	32				SPACE
SPACE				33	34				SPACE
SPACE				35	36				SPACE
SPACE				37	38				SPACE
SPACE				39	40				SPACE
SPACE				41	42				SPACE

CONNECTED LOAD:	30.2 KVA	83.8	A	REMARKS:
DEMAND LOAD:	20.4 KVA	56.6	A	PROVIDE WITH 1000W HEATER
DATE:				
REV:				

LEGEND

ABBR.	EXPLANATION	SYMBOL
XFMR	TRANSFORMER	T
NIC	NOT IN CONTRACT	
CKT	CIRCUIT – NUMBER AS NOTED (TYP.)	CKT-XX
UON	UNLESS OTHERWISE NOTED	
A/100	LIGHTING FIXTURE DESIGNATION – SEE SCHEDULE	
ETR	EXISTING TO REMAIN	
N.L.	NIGHT LIGHT	
WP	WEATHERPROOF	
E	EMERGENCY LIGHT, CIRCUIT, PANEL	
C	CONDUIT, CONCEALED. SIZE AS NOTED (TYP.)	
	CONDUIT, UNDERGROUND OR UNDERFLOOR	
	CONDUIT, EXPOSED	
FLEX	CONDUIT, FLEXIBLE	
	MULTI-OUTLET ASSEMBLY-RECEPTACLES AS INDICATED	M
	HOMERUN TO PANEL/CIRCUITS AS NOTED	
#X	WIRE COUNT OF # 12 UON/SPECIFIED	#
UP	CONDUIT UP	
DN	CONDUIT DOWN	
PNL	PANELBOARD – SEE SCHEDULES	
	REFER TO INDICATED NOTE	1
RECPT	TELEPHONE RECEPTACLE	
	TELEPHONE RECEPTACLE IN FLOOR BOX	
	DUPLEX RECEPTACLE – NEMA 5-20R	
	QUADRUPLEX RECEPTACLE – NEMA 5-20R	
	DUPLEX RECEPTACLE – NEMA 5-20R GFCI TYPE	
	ISOLATED GRD DUPLEX RECEPTACLE – NEMA 5-20R	IG
	DUPLEX RECEPTACLE – NEMA 5-20R SPLIT WIRED	
	DUPLEX RECEPTACLE IN FLOOR BOX	
	RECEPTACLE – NEMA CONFIGURATION AS NOTED	
	TELEVISION RECEPTACLE	TV
J-BOX	JUNCTION BOX	J
	SINGLE PHASE MOTOR – SIZE AS INDICATED	
	THREE PHASE MOTOR – SIZE AS INDICATED	
	MOTOR CONTROLLER	
	MOTOR DISCONNECT	
	COMBINATION STARTER/DISCONNECT	
SW	SWITCH – SINGLE POLE	S
	SWITCH – TWO POLE	S2
	SWITCH – THREE WAY	S3
	SWITCH – FOUR WAY	S4
	SWITCH – DIMMING TYPE	SD
	SWITCH – WITH PILOT LIGHT	SP
	SWITCH – THERMAL OVERLOAD	ST
	SWITCH – LOW VOLTAGE	SL
	CALL-IN SWITCH	SX
	SWITCH – WITH TIMER	TS
FS	SPRINKLER FLOW SWITCH	FS
TS	SPRINKLER TAMPER SWITCH	TS
	WEATHERPROOF FIRE ALARM HORN	H
	FIRE ALARM MANUAL STATION	F
FACP	FIRE ALARM CONTROL PANEL	FACP
FANN	FIRE ALARM REMOTE ANNUNCIATOR	FANN
T'STAT	THERMOSTAT	T
	COMPUTER OUTLET	C
	PUSHBUTTON SWITCH	
TTB/C	TELEPHONE TERMINAL BOARD/CABINET	TTB
STBY	STANDBY CIRCUIT	
PC	PHOTOCELL	PC
TC	TIMECLOCK	
	CLOCK	
	COMBINATION CLOCK/SPEAKER	
	MAGNETIC DOOR SWITCH	MS
	SECURITY ALARM PANEL	SA
	SOUND/CLOCK CONSOLE	SCC
SPKR	SPEAKER ASSEMBLY – CEILING MOUNTED	S
	WALL MOUNTED SPEAKER ASSEMBLY	S
	BELL	
	COMBINATION SPEAKER/CALL-IN SWITCH	SX
CCTV	CLOSED-CIRCUIT TELEVISION CAMERA	
	EXIT SIGN – SELF POWERED	
	BATTERY-POWERED EMERGENCY LIGHT	
	LIGHTING FIXTURES – VARIOUS TYPES AS NOTED	
	SHADING INDICATES EMERGENCY LIGHTING FIXTURE	
	DIAGONAL LINE INDICATES STANDBY FIXTURE	
	SMOKE DETECTOR	SD
	DOOR CHIMES	CH
	FAN W/ LIGHT	F

THIS IS A STANDARD LEGEND, ALL SYMBOLS SHOWN ON LEGEND ARE NOT NECESSARILY ON THE DRAWING(S).

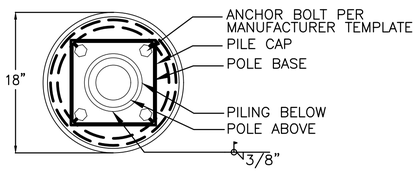

1 / E1 POLE BASE DETAIL - PLAN VIEW
NTS

POLE BASE NOTES

1. PILING SHALL BE STEEL, 7 INCH STD. ASTM A53 GR-B OR APPROVED EQUAL.
2. ALL STRUCTURAL STEEL SHALL BE ASTM A36
3. ALL WELDING SHALL BE PERFORMED IN ACCORDANCE WITH AMERICAN WELDING SOCIETY D1.1-86
4. VERIFY ALL UTILITY LOCATIONS AND OBTAIN CLEARANCE FROM PROJECT MANAGER PRIOR TO INSTALLATION OF PILES.
5. PILING SHALL BE DRIVEN TO A MINIMUM DEPTH OF 15' BELOW FINISHED GRADE INTO SANDY-ROCKY TYPE STRUCTURAL SOIL. PILING SHALL BE DRIVEN TO A VERTICAL TOLERANCE OF 1/4" PER 10'-0" VERTICAL AND TO A HORIZONTAL TOLERANCE OF 1"
6. CONCRETE SHALL ATTAIN A 28 DAY COMPRESSIVE STRENGTH OF 2500 PSI
7. WELDED WIRE FABRIC SHALL CONFORM TO ASTM A185.

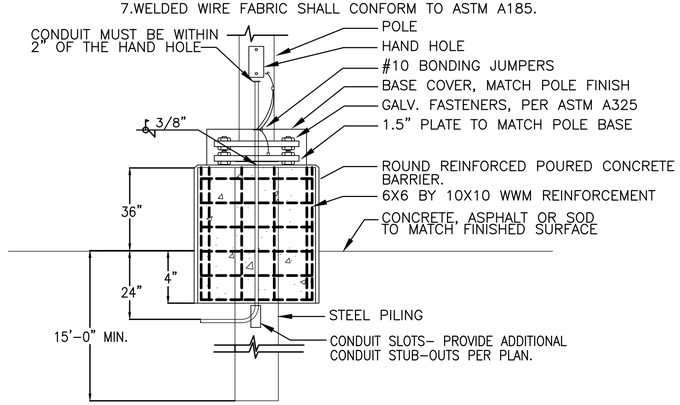

2 / E1 POLE BASE DETAIL-ELEVATION VIEW
NTS
NOTE: FILL ANNULAR SPACE BETWEEN CONCRETE BARRIER AND STEEL PIPING WITH PEA GRAVEL.

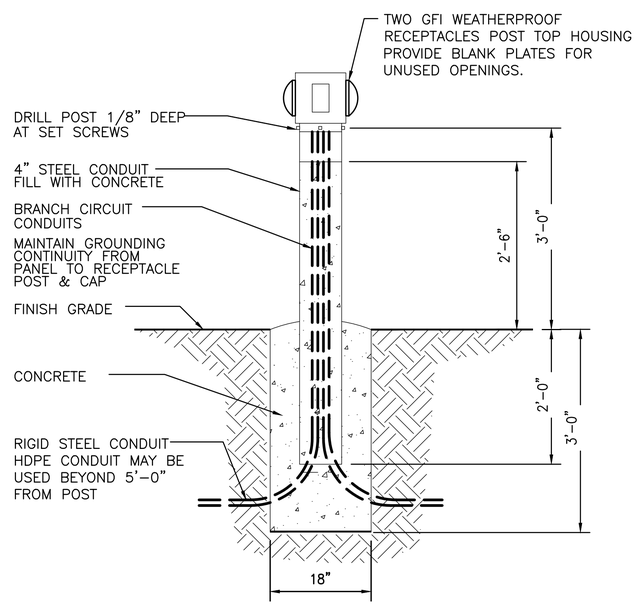

3 / E1 HEADBOLT HEATER POST DETAIL
NTS

STATE OF ALASKA 49TH EDWARD W. CARLSON 02/23/2018 EE-9354 REGISTERED PROFESSIONAL ENGINEER

MBA Consulting Engineers, Inc.
(907) 274-2622 / FAX (907) 274-0914
CERT OF AUTH: AECC218

R&M CONSULTANTS, INC.
9101 Vanguard Drive
Anchorage, Alaska 99507
rmconsult.com • email@rmconsult.com
(phone) 907.522.1707 • (fax) 907.522.3403
CERT OF AUTH: AECC111

STATE OF ALASKA
DEPT. OF NATURAL RESOURCES - TLO
PARKING LOT EXPANSION
1423 PEGER ROAD
FAIRBANKS, ALASKA

No.	Description	Date

Drawn By: SNS
Checked By: EWC
Date: FEBRUARY 23, 2018
Phase: CONSTRUCTION DOCS
Project No: R&M 2226.04
SHEET TITLE: LEGEND, SCHEDULES AND DETAILS
SHEET NO: E1

Z:\17037PPL - DNR Fairbanks Peger Road Parking Lot Expansion\E-Working\Drawings\17037PPL_E1.dwg
Plotted 2/23/2018 2:37 PM by Ed Carlson

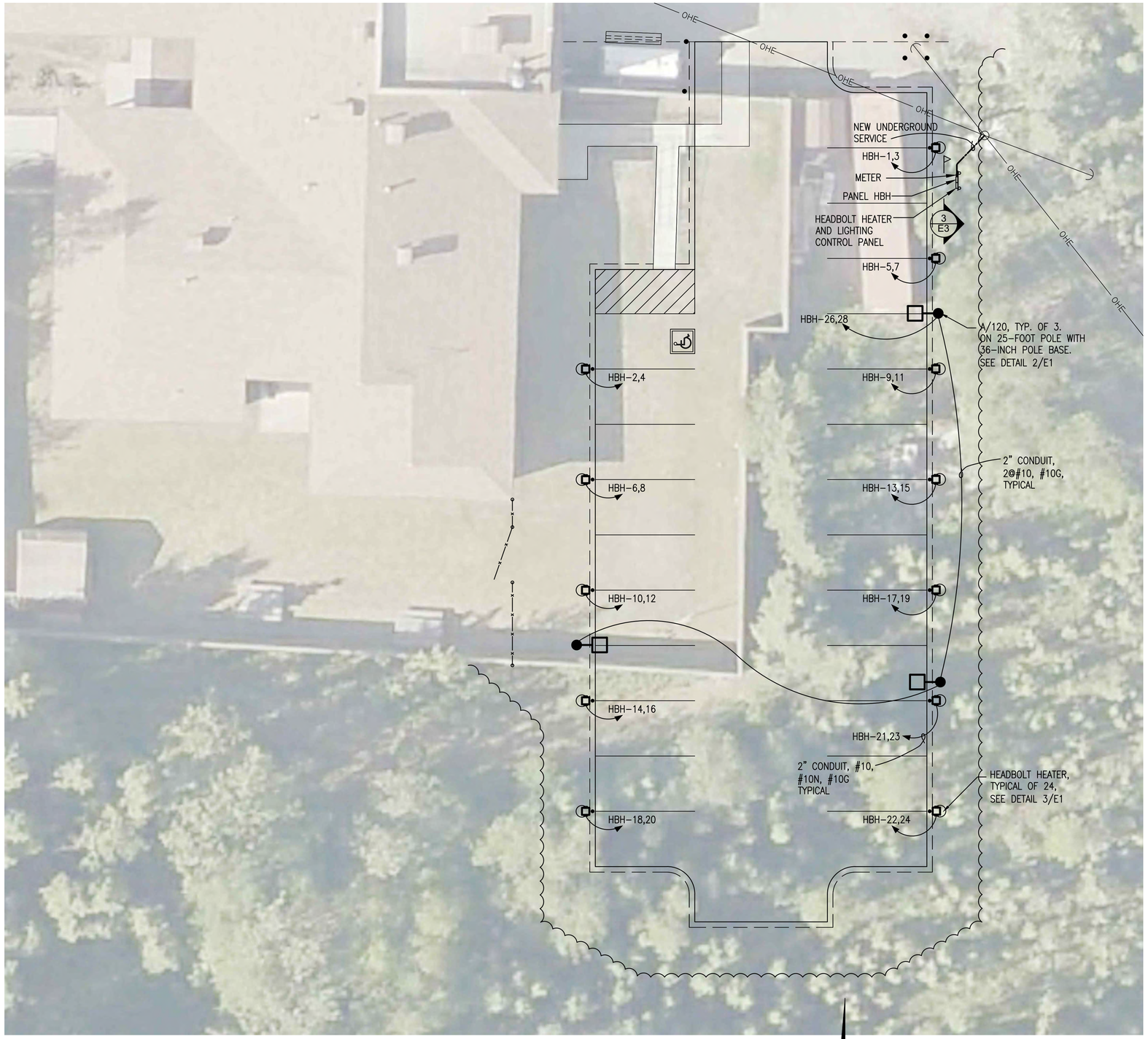

1 / E2 SITE PLAN
SCALE: 1" = 10'-0"

0 10 20
SCALE IN FEET

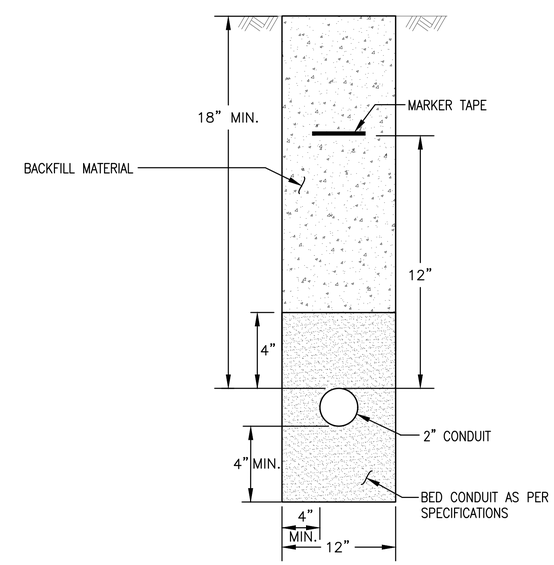

2 / E2 CONDUIT TRENCH DETAIL
NTS STANDARD EXCAVATION

STATE OF ALASKA
DEPT. OF NATURAL RESOURCES - TLO
PARKING LOT EXPANSION
1423 PEGER ROAD
FAIRBANKS, ALASKA

No.	Description	Date

Drawn By: SNS
Checked By: EWC
Date: FEBRUARY 23, 2018
Phase: CONSTRUCTION DOCS
Project No: R&M 2226.04
SHEET TITLE: ELECTRICAL SITE PLAN
SHEET NO: E2

STATE OF ALASKA 49TH
EDWARD W. CARLSON
02/23/2018
EE-9354
REGISTERED PROFESSIONAL ENGINEER

MBA Consulting Engineers, Inc.
(907) 274-2622 / FAX (907) 274-0914
CERT OF AUTH: AECC218

R&M CONSULTANTS, INC.
9101 Vanguard Drive
Anchorage, Alaska 99507
rmconsult.com • email@rmconsult.com
(Phone: 907.522.1707 • Fax: 907.522.3403)
CERT OF AUTH: AECC111

Z:\17037PPL -DNR Fairbanks Peger Road Parking Lot Expansion\E-Working\Drawings\17037PPL_E2.dwg
Plotted 2/23/2018 2:37 PM by Ed Carlson

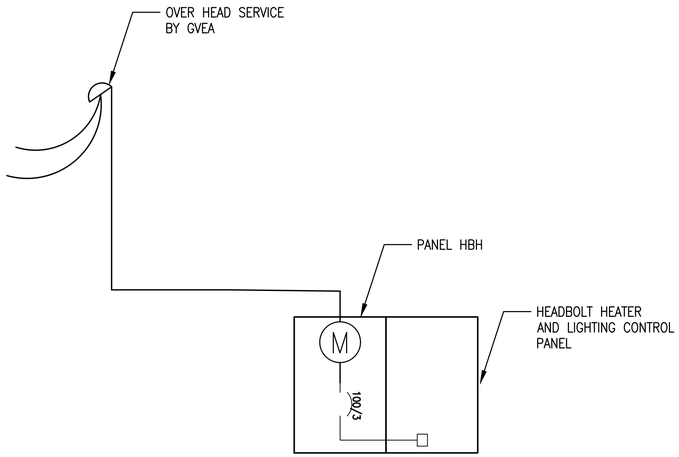

1 / E3 POWER ONE-LINE DIAGRAM
NTS

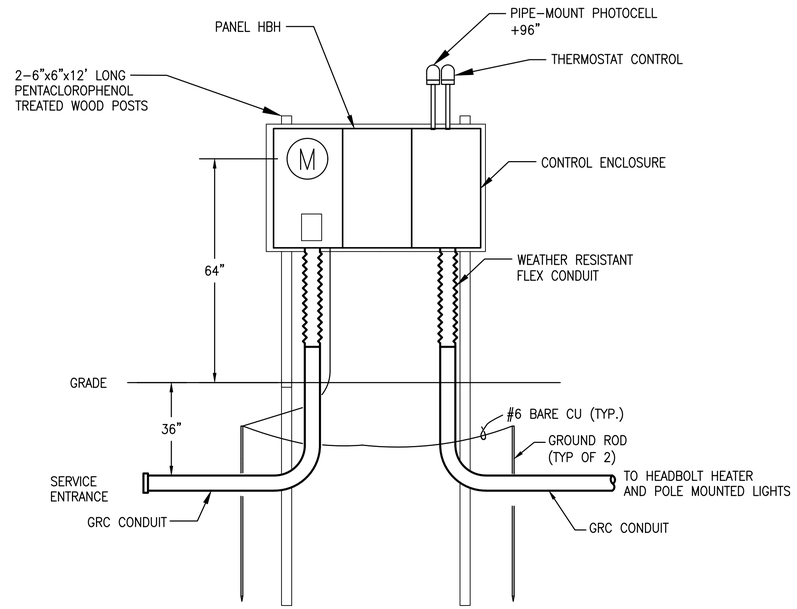

2 / E3 LOAD CENTER ELEVATION
NTS

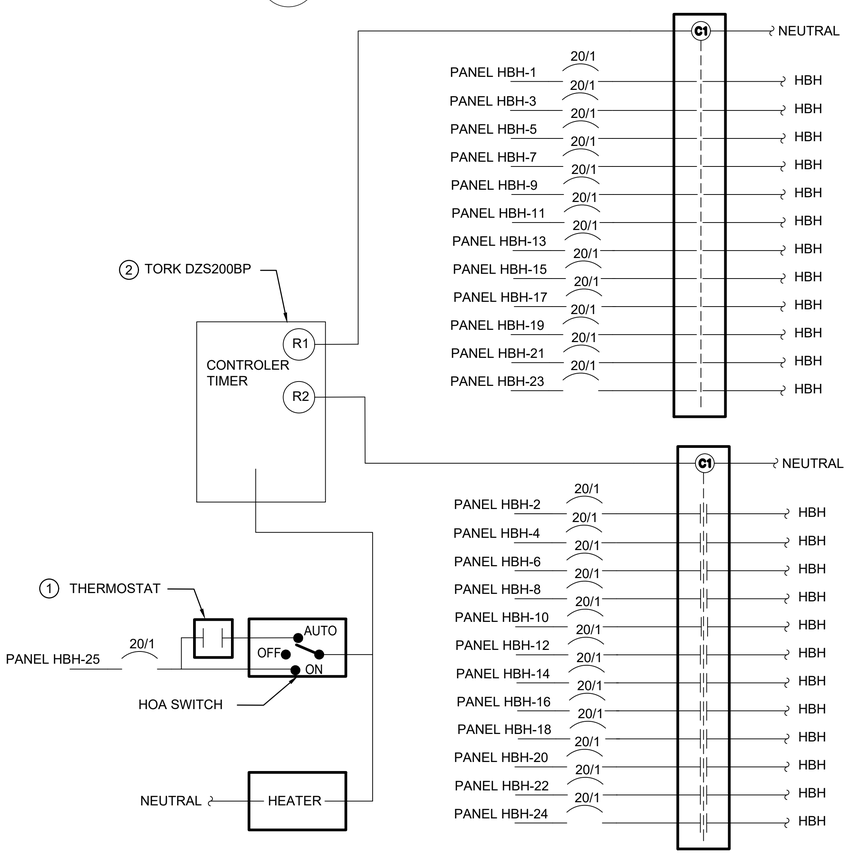

3 / E3 HEADBOLT HEATER CONTROL DIAGRAM
NTS

DETAIL NOTES

1. SET TO RUN AT BELOW 20 DEGREES FAHRENHEIT.
2. SET TO ALTERNATE RELAYS EVERY 30 MINUTES.

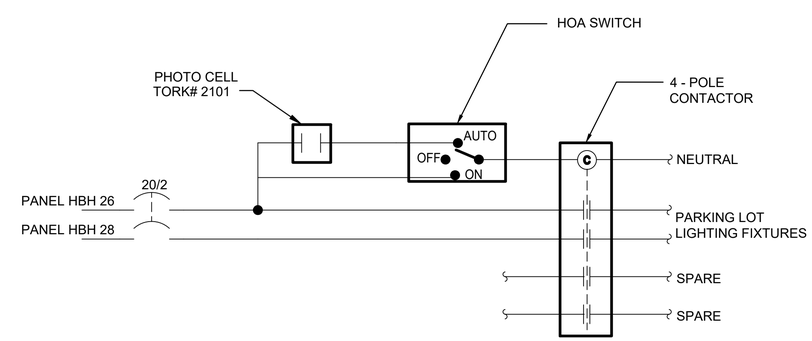

4 / E3 LIGHTING CONTROL DIAGRAM
NTS

STATE OF ALASKA
EDWARD W. CARLSON
49TH
02/23/2018
EE-9354
REGISTERED PROFESSIONAL ENGINEER

MBA
Consulting Engineers, Inc.
(907) 274-2622 / FAX (907) 274-0914
CERT OF AUTH: AECC218

R&M CONSULTANTS, INC.
9101 Vanguard Drive
Anchorage, Alaska 99507
rmconsult.com • email@rmconsult.com
(Phone: 907.522.1707 • Fax: 907.522.3403)
CERT OF AUTH: AECC111

STATE OF ALASKA
DEPT. OF NATURAL RESOURCES - TLO
PARKING LOT EXPANSION
1423 PEGER ROAD
FAIRBANKS, ALASKA

No.	Description	Date

Drawn By: SNS
Checked By: EWC
Date: FEBRUARY 23, 2018
Phase: CONSTRUCTION DOCS
Project No: R&M 2226.04
SHEET TITLE: DETAILS AND ONE-LINE
SHEET NO: E3

Z:\17037PPL - DNR Fairbanks Peger Road Parking Lot Expansion\E-Working\Drawings\17037PPL_E3.dwg
Plotted 2/23/2018 2:37 PM by Ed Carlson

DIVISION 16 – ELECTRICAL

PART 1 – GENERAL

1.1 SCOPE

A. PROVIDE COMPLETE ELECTRICAL SYSTEMS AS SHOWN ON DRAWINGS AND SPECIFIED. FURNISH ALL LABOR, EQUIPMENT, APPLIANCES, MATERIALS, AND PERFORM OPERATIONS REQUIRED FOR COMPLETE INSTALLATION IN ACCORDANCE WITH ALL SECTIONS OF SPECIFICATIONS, DRAWINGS, CODES, AND CONDITIONS OF CONTRACT.

1.2 CODES, STANDARDS, FEES, PERMITS

A. COMPLY WITH LATEST EDITION OF THE NATIONAL ELECTRICAL CODE, NATIONAL ELECTRICAL SAFETY CODE, LOCAL CODES, AMENDMENTS, ORDINANCES AND REQUIREMENTS OF UTILITY COMPANIES' FURNISHING SERVICES TO INSTALLATION. COMPLY WITH NEMA, UL, ANSI, ICEA AND OTHER INDUSTRY STANDARDS. COMPLY WITH REQUIREMENTS OF IBC, IMC, UPC, AND OTHER APPLICABLE CODES.

B. SECURE AND PAY FOR ALL INSPECTIONS, FEES, PERMITS, ETC., REQUIRED BY LOCAL AND STATE AGENCIES.

1.3 DRAWINGS

A. ELECTRICAL DRAWINGS ARE DIAGRAMMATIC AND DO NOT SHOW ALL FEATURES OF WORK. INSTALL ELECTRICAL ITEMS TO PROVIDE SYMMETRICAL APPEARANCE. DO NOT SCALE DRAWINGS. REVIEW OTHER DRAWINGS AND ADJUST WORK TO CONFORM TO CONDITIONS SHOWN. VERIFY FIELD CONDITIONS. IMMEDIATELY CONTACT THE OWNER'S REPRESENTATIVE FOR CLARIFICATION OF QUESTIONABLE, OBSCURE ITEMS, OR APPARENT CONFLICTS. THE OWNER'S REPRESENTATIVE'S DECISION IS FINAL FOR ALL CLARIFICATIONS REQUESTED. EXTRA COST RESULTING FROM A CONDITION WHERE CLARIFICATION WAS NOT REQUESTED: MADE AT NO INCREASE IN CONTRACT AMOUNT UNLESS EXTRA COST IS APPROVED IN WRITING.

1.4 WORKMANSHIP

A. CONSIDERED AS IMPORTANT AS ELECTRICAL AND MECHANICAL EFFICIENCY AND SUBJECT TO APPROVAL. EMPLOY WORKMEN SKILLED IN TRADE AND FAMILIAR WITH PARTICULAR TECHNIQUES APPLICABLE TO VARIOUS SECTIONS OF WORK. INSTALL IN ACCORDANCE WITH NECA "STANDARD PRACTICES FOR GOOD WORKMANSHIP IN ELECTRICAL CONTRACTING."

1.5 COORDINATION

A. COORDINATE WITH OTHER TRADES FOR PROPER INSTALLATION AND TIMELY EXECUTION. ANY CHANGES NECESSITATED BY FAILURE TO PROPERLY COORDINATE WORK: MADE AT NO INCREASE IN CONTRACT AMOUNT.

B. VERIFY INFORMATION SHOWN ON PLANS WITH EQUIPMENT ITEMS ACTUALLY FURNISHED WHERE EQUIPMENT IS FURNISHED OR INSTALLED BY OTHERS. NOTIFY OWNER'S REPRESENTATIVE OF ANY CONFLICTS.

C. COORDINATE WITH SERVING UTILITIES. PROVIDE ALL EQUIPMENT AND LABOR REQUIRED, INCLUDE ALL COSTS NECESSARY FOR COMPLETE ELECTRICAL SERVICES.

1.6 SUBMITTALS

A. SUBMITTAL REVIEW IS FOR GENERAL DESIGN AND ARRANGEMENT ONLY AND DOES NOT RELIEVE THE CONTRACTOR FROM ANY REQUIREMENTS OF CONTRACT DOCUMENTS. PROVISION OF A COMPLETE AND SATISFACTORY WORKING INSTALLATION IS THE SOLE RESPONSIBILITY OF THE CONTRACTOR.

B. UNLESS NOTED, SUBMIT FIVE COPIES OF ALL MATERIALS AND EQUIPMENT LIGHTING FIXTURES, PANELBOARDS, WIRING DEVICES, AND CONTROLS.

1.7 SUBSTITUTIONS

A. MAKE NO SUBSTITUTIONS OR REVISIONS WITHOUT WRITTEN APPROVAL. FOR EQUIPMENT SCHEDULED BY MANUFACTURER'S NAME AND CATALOG DESIGNATIONS: MANUFACTURER'S PUBLISHED DATA AND/OR SPECIFICATION FOR THAT ITEM ARE CONSIDERED PART OF SPECIFICATION. ALL SIMILAR EQUIPMENT SAME MANUFACTURER THROUGHOUT.

1.8 PROJECT COMPLETION

A. THOROUGHLY CLEAN INSIDE AND OUT ALL FIXTURES AND EQUIPMENT. CLEAN PREMISES OF CONSTRUCTION DEBRIS. CALL FOR FINAL CONSTRUCTION OBSERVATION. CONDUCT OPERATING TEST FOR APPROVAL. DEMONSTRATE INSTALLATION TO OPERATE SATISFACTORILY IN ACCORDANCE WITH REQUIREMENTS OF CONTRACT DOCUMENTS. PROVIDE PERSONNEL TO ASSIST ENGINEER IN REMOVAL AND REPLACEMENT OF EQUIPMENT FOR OBSERVATION PURPOSES.

B. SHOULD ANY PORTION OF INSTALLATION FAIL, REPAIR OR REPLACE ITEMS UNTIL ITEMS CAN BE DEMONSTRATED TO COMPLY.

C. SUBMIT A LETTER CERTIFYING COMPLETION OF PROJECT IN ACCORDANCE WITH PLANS AND SPECIFICATIONS. TURN OVER RECORD DRAWINGS TO OWNER.

D. SUBMIT OPERATING AND MAINTENANCE MANUALS TO OWNER, TRAIN OWNER'S PERSONNEL IN OPERATION AND MAINTENANCE OF ELECTRICAL SYSTEMS.

1.9 GUARANTEE

A. GUARANTEE ALL MATERIAL TO BE NEW, ALL WORK TO BE FREE FROM DEFECTS IN MATERIAL AND WORKMANSHIP FOR ONE YEAR FROM DATE OF FINAL ACCEPTANCE. REPAIR OR REPLACE ANY WORK OR MATERIAL DEEMED DEFECTIVE DURING THE GUARANTEE PERIOD AT NO COST TO THE OWNER.

PART 2 – PRODUCTS

2.1 RACEWAYS

A. GALVANIZED RIGID STEEL CONDUIT OR INTERMEDIATE METAL CONDUIT: USE IN DAMP OR WET LOCATIONS, UNDERGROUND, IN CONCRETE OR CMU, WHERE SUBJECT TO PHYSICAL DAMAGE, FOR SERVICE CONDUCTORS AND PANELBOARD FEEDERS.

B. FLEXIBLE METALLIC CONDUIT: USE FOR FINAL CONNECTIONS TO FIXTURES AND EQUIPMENT TO ISOLATE VIBRATION OR ALLOW RELOCATION. PROVIDE FLEXIBLE WATERTIGHT CONDUIT IN DAMP OR WET LOCATIONS (PUMPS, KITCHEN EQUIPMENT, ETC.). WHERE USED OUTDOORS, USE LIQUIDTIGHT FLEXIBLE CONDUIT RATED FOR –60 DEGREES F AND LISTED FOR DIRECT BURY.

C. PROVIDE PULL WIRE IN RACEWAYS INSTALLED BUT LEFT EMPTY.

D. WATERPROOF ALL ROOF AND EXTERIOR WALL PENETRATIONS AS APPROVED.

2.2 WIRE AND CABLE

A. INSTALL ALL CONDUCTORS IN APPROVED RACEWAY SYSTEMS. ALL CONDUCTOR SIZES BASED ON COPPER #12 AWG MINIMUM EXCEPT CONTROL WIRING MAY BE #14.

B. MINIMUM INSULATION RATING: 90 DEGREES C, 600 VOLT, XHHW.

C. COLOR CODE 120/208 VOLT SYSTEMS: BLACK, RED, BLUE AND WHITE.

D. INSTALL NO THERMOPLASTIC INSULATED CONDUCTORS WHEN TEMPERATURE IS BELOW 20 DEGREES F.

E. CONNECTIONS:

1. #6 AND LARGER: SOLDERLESS LUGS.

2. #8 AND SMALLER: INSULATED WIRE NUT CONNECTOR, IDEAL "WINGNUT" HARD SHELL.

F. LOW VOLTAGE, SPECIAL PURPOSE, COAXIAL CABLES, ETC.: INSTALL AND TERMINATE PER MANUFACTURER'S RECOMMENDATIONS.

2.3 BOXES

A. PROVIDE ADDITIONAL CAST PULL BOXES AS REQUIRED TO AVOID EXCESS PULLING TENSIONS AND TO FACILITATE WORK.

2.4 CABINETS

A. PROVIDE CABINETS OF CODE GAUGE, ZINC–COATED SHEET STEEL, INTERIOR DIMENSIONS AS INDICATED, WITH HINGED DOOR AND FLUSH CATCH. PROVIDE WITH 3/4" PLYWOOD INTERIOR BACKBOARD WITH MANUFACTURER'S STANDARD FINISH. KEY TO MATCH PANELBOARDS.

2.5 PANELBOARDS AND OVERCURRENT PROTECTION

A. SQUARE D TYPE NQOD SERIES. SIMILAR EQUIPMENT BY OTHER MANUFACTURERS ACCEPTABLE. SAME MANUFACTURER AND KEYED ALIKE THROUGHOUT PROJECT. FACTORY ASSEMBLED PANELS WITH THERMAL MAGNETIC BRANCH BREAKERS, MAIN LUGS OR CIRCUIT BREAKER, ETC., AS SHOWN. PROVIDE DEAD FRONT CONSTRUCTION, FLUSH OR SURFACE MOUNTED AS SHOWN, 20" WIDE, 5–3/4" DEEP UNLESS OTHERWISE INDICATED. PROVIDE DOORS WITH CONCEALED HINGES, FLUSH KEYED HANDLES. PROVIDE TYPED CIRCUIT DIRECTORIES ON DOOR IN FRAME WITH PROTECTIVE PLASTIC COVERING. DIRECTORY TO INCLUDE CIRCUIT NUMBER, CIRCUIT USE, ETC. SEE DRAWINGS FOR ADDITIONAL REQUIREMENTS. MOUNT TOP OF CABINET AT 6'–6" UNLESS NOTED.

B. PROVIDE CIRCUIT BREAKERS OF THERMAL MAGNETIC TYPE, QUICK–MAKE, QUICK–BREAK WITH A MINIMUM OF 10,000 AIC RATING AT 120, 240 VOLT. MEET NEMA STANDARD AB1. PROVIDE HIGH INTERRUPTING CAPACITY AND NON–FUSE TYPE CURRENT LIMITING CIRCUIT BREAKERS WHERE SHOWN. PROVIDE MULTI–POLE BREAKERS WITH INTERNAL COMMON TRIP.

2.6 WIRING DEVICES

A. DUPLEX RECEPTACLES: 20 AMP, 125 VOLT, NEMA TYPE 5–20R, MEET FEDERAL SPECIFICATION W–C–596F TESTS. GREY COLOR. PROVIDE OUTLETS DESIGNATED GFI WITH INTEGRAL CLASS A GROUND FAULT CIRCUIT INTERRUPTER UL 943–LISTED.

B. SPECIAL OUTLETS: CAPACITY, VOLTAGE AND NEMA CONFIGURATION NOTED, SAME QUALITY AS DUPLEX RECEPTACLES.

C. DEVICE PLATES: UL LISTED, ONE PIECE FLUSH GALVANIZED PLATES, GASKETED CAST SELF–CLOSING WEATHERPROOF PLATES OUTDOORS, U.L. LISTED FOR WET LOCATIONS WHILE IN USE.

2.7 GROUNDING

A. GROUND ALL ELECTRICAL DEVICES, METALLIC CONDUIT, METAL FRAMING, ETC., IN ACCORDANCE WITH N.E.C. ARTICLE 250.

B. GROUND ALL MAIN DISCONNECT SWITCHES AND DISTRIBUTION PANELS WITH MINIMUM #6 AWG BARE COPPER GROUND WIRE UNLESS OTHERWISE NOTED.

C. UTILIZE THE METALLIC RACEWAY SYSTEM AS THE SYSTEM GROUNDING PATH FOR ALL DEVICES.

D. PROVIDE SEPARATE GREEN GROUNDING CONDUCTOR FOR ALL FEEDER AND BRANCH CIRCUIT CONDUITS AND ALL EXTERIOR ELECTRICAL DEVICES, SUCH AS POLE MOUNTED LIGHTING, AND RECEPTACLES.

2.8 LIGHTING FIXTURES

A. PROVIDE ALL NEW FIXTURES, UL LISTED AND EQUIPPED WITH NECESSARY FRAMES AND MODIFICATIONS REQUIRED FOR COMPLETE INSTALLATION. UNIFORMLY SPACE AND COORDINATE INSTALLATION TO AVOID CONFLICTS.

B. PROVIDE ALL FIXTURES COMPLETE WITH LAMPS, BALLASTS, LENSES AND MOUNTING DEVICES AS REQUIRED.

C. VERIFY MOUNTING HEIGHT OF PENDANT MOUNTED FIXTURE WITH ENGINEER PRIOR TO MOUNTING.

D. PROVIDE ALL EXTERIOR LIGHTING FIXTURES U.L. LISTED FOR WET LOCATION AND –40 DEG F.

E. EQUIP EXTERIOR FIXTURES WITH A DRIVER RATED FOR –40 DEGREES F.

F. POLE MOUNTED FIXTURE AND POLE ASSEMBLIES GUARANTEED TO WITHSTAND 100 MPH WINDS WITHOUT DAMAGE.

G. SET FIXTURES TRUE AND PLUMB, FREE OF LIGHT LEAKS, WARPS, DENTS, IRREGULARITIES.

PART 3 – EXECUTION

3.1 GENERAL

A. INSTALL ALL MATERIAL AND EQUIPMENT IN ACCORDANCE WITH MANUFACTURER'S RECOMMENDATIONS, INSTRUCTIONS AND INSTALLATION DRAWINGS, UNLESS OTHERWISE INDICATED AND IN ACCORDANCE WITH NECA'S "STANDARD PRACTICES FOR GOOD WORKMANSHIP IN ELECTRICAL CONTRACTING".

B. SEAL WATERTIGHT ALL EXTERIOR PENETRATIONS.

C. REPAIR ALL DAMAGE TO FINISHED SURFACES WHERE CAUSED BY INSTALLATION OF ELECTRICAL EQUIPMENT.

D. PROVIDE PROPER IDENTIFICATION FOR PANELS, SWITCHES, OR ANY ITEM OF ELECTRICAL EQUIPMENT USED AS A CONTROL DEVICE OR DISCONNECTING MEANS FOR ANY EQUIPMENT. IDENTIFY BOXES CONTAINING EMERGENCY CIRCUITS PER N.E.C. ARTICLE 700–9.

3.2 SUPPORTS

A. SUPPORT RACEWAYS ON APPROVED TYPES OF WALL BRACKETS OR STRUTS. PROVIDE HOT DIP GALVANIZED OR STAINLESS STEEL STRUT SUPPORTS USING STAINLESS STEEL HARDWARE.

B. ANCHOR EQUIPMENT TO RESIST SEISMIC DESIGN CATEGORY D EARTHQUAKE FORCES. PROVIDE ADEQUATE BACKING AT STRUCTURAL ATTACHMENT POINTS TO ACCEPT THE FORCES INVOLVED.

C. SECURE BOXES, WALL BRACKETS, CABINETS AND HANGERS BY MEANS OF MACHINE SCREWS, BOLTS OR WELDING ON METAL SURFACES; AND WOOD SCREWS IN WOOD CONSTRUCTION.

3.3 AS–BUILT DRAWINGS

A. KEEP CLEAN SET OF PRINTS AT JOB SITE AND RECORD ALL ELECTRICAL CHANGES THAT OCCURRED DURING CONSTRUCTION. FAILURE TO DO SO MAY DELAY PAYMENT.

B. AT END OF CONSTRUCTION, PROVIDE ONE COMPLETE SET OF DRAWINGS INDICATING ALL FIELD CHANGES FOR RECORD PURPOSES TO THE OWNER'S REPRESENTATIVE.

END OF SECTION

STATE OF ALASKA
49TH
EDWARD W. CARLSON
EE-9354
02/23/2018
REGISTERED PROFESSIONAL ENGINEER

MBA
Consulting Engineers, Inc.
(907) 274-2622 / FAX (907) 274-0914
CERT OF AUTH: AECC218

R&M CONSULTANTS, INC.
9101 Vanguard Drive
Anchorage, Alaska 99507
rmconsult.com • email@rmconsult.com
(Phone) 907.522.1707 • (Fax) 907.522.3403
CERT OF AUTH: AECC111

STATE OF ALASKA
DEPT. OF NATURAL RESOURCES - TLO

PARKING LOT EXPANSION
1423 PEGER ROAD
FAIRBANKS, ALASKA

No.	Description	Date

Drawn By: SNS
Checked By: EWC
Date: FEBRUARY 23, 2018
Phase: CONSTRUCTION DOCS
Project No: R&M 2226.04
SHEET TITLE: SPECIFICATIONS
SHEET NO: E4

Z:\17037PPL - DNR Fairbanks Peger Road Parking Lot Expansion\E-Working\Drawings\17037PPL_E4.dwg
Plotted 2/23/2018 2:37 PM by Ed Carlson